© Siemens 2021



3/2 Product overview
3/2 Overview

3/9 Introduction
3/9 Criteria for selection of flowmeter

3/11 SITRANS FM (electromagnetic)
3/11 System information
3/29 SITRANS FM Verificator
3/31 Transmitters
3/31 - MAG 5000/6000
3/43 - MAG 6000 I/6000 I Ex
3/48 Flow sensors
3/48 - MAG 1100 and MAG 1100 HT
3/56 - MAG 1100 F
3/66 - MAG 3100 and MAG 3100 HT
3/82 - MAG 3100 P
3/91 - MAG 5100 W
3/104 - SITRANS FM100
3/109 - Transmitter TRANSMAG 2 with sensor MAG 911/E
3/119 Battery-operated water meter MAG 8000
3/128 - MAG 8000 for abstraction and distribution network application (7ME6810)
3/133 - MAG 8000 CT for revenue and bulk metering (7ME6820)
3/140 - MAG 8000 3G/UMTS Wireless Communication Module
3/141 - Accessories and spare parts for MAG 8000

3/144 SITRANS FC (Coriolis)
3/144 System information
3/155 Transmitters
3/155 - SITRANS FCT030
3/161 - SITRANS FCT010
3/164 - SITRANS FCT070
3/167 Sensors and Flowmeter systems
3/167 - SITRANS FCS300 flow sensor
3/176 - SITRANS FC330 flowmeter system
3/180 - SITRANS FC310 flowmeter system
3/183 - SITRANS FCS300 with FCT070 transmitter
3/187 - SITRANS FCS400 flow sensor
3/193 - SITRANS FC430 flowmeter for OEM customers
3/197 - SITRANS FC410 flowmeter for OEM customers
3/200 - SITRANS FCS400 with FCT070 transmitter
3/203 - SITRANS FC MASS 2100 and FC300 DN 4 sensors
3/218 - MASS 2100 / FC300 DN 4 with FCT030 transmitter
3/223 - MASS 2100 / FC300 DN 4 with FCT010 transmitter
3/227 - MASS 2100 / FC300 DN 4 with FCT070 transmitter
3/231 Spare parts
3/231 - Digital - Spare parts
3/236 - MASS 6000 Generation - Spare parts
3/240 - SIFLOW FC070

3/244 SITRANS FS (ultrasonic)
3/244 Inline ultrasonic flowmeters
3/245 - System information
3/252 - SITRANS FUS060 transmitter
3/259 - SITRANS FUS080/FUE080 transmitter
3/268 - SONO 3300/FUS060 flowmeter
3/273 - SONO 3100/FUS060 flowmeter
3/282 - SONOKIT flowmeter (with FUS060 or FUS080)
3/292 - SITRANS FUS380 standard flowmeter
3/301 - SITRANS FUE380 flowmeter with CT approval
3/308 - SITRANS FUS380/FUE380 dimensional drawings and circuit diagrams
3/311 - SITRANS FUE950 energy calculator
3/320 - Pt500 temperature sensor pairs
3/322 Clamp-on ultrasonic flowmeters
3/322 - SITRANS FS230 ultrasonic flowmeter
3/324 - SITRANS FSS200 ultrasonic flow sensor
3/329 - SITRANS FST030 transmitter, wall mount housing
3/333 - Selection and ordering data for SITRANS FS230
3/344 - SITRANS FS220 ultrasonic flowmeter
3/353 - SITRANS FST020 transmitter, wall mount housing
3/357 - Thickness gauge
3/358 - Accessories and spare parts

3/361 SITRANS FX (Vortex)
3/361 SITRANS FX300
3/379 SITRANS FX330

3/395 SITRANS FVA
3/395 SITRANS FVA250

3/405 SITRANS FP (differential pressure flow measurement)
3/405 Introduction
3/410 SITRANS FP230/FPS200 primary elements according to ISO 5167
3/413 - Orifice plate with pressure tappings
3/421 - Orifice plate with annular chamber
3/428 - Orifice meter run
3/434 - Orifice plate
3/437 - Orifice plate with orifice flange according to ASME B16.36
3/441 SITRANS FP330/FPS300 averaging pitot tube
3/443 - Averaging pitot tube for gas and liquids
3/450 - Averaging pitot tube for steam
3/455 - Averaging pitot tube with FASTLOK

You can download all instructions, catalogs and certificates for SITRANS F free of charge at: www.usa.siemens.com/flow

© Siemens 2021

Overview

	Application	Description	Catalog page	Software for parameterization
SITRANS FM electromagnetic flowmeters – Pulsed DC magnetic flowmeter				
	Designed in robust IP67 polyamide enclosures for compact or remote mounting. 19", back of panel and front of panel enclosure program.	**Transmitter MAG 5000/6000** • Superior signal resolution for optimum turn down ratio • Comprehensively self-diagnostic, for error indication and logging • Multi-lingual display and keypad interface • Communication modules: HART, Modbus, PROFIBUS, FOUNDATION Fieldbus, DeviceNet • Custody transfer approval: MI-001, PTB K7.2	3/31	SIMATIC PDM
	Designed in robust die-cast aluminum enclosure for demanding applications and where explosion proof protection is necessary.	**Transmitter MAG 6000 I/6000 I Ex** • Remote and compact mounting with all sensors • Communication modules: HART, Modbus, PROFIBUS, FOUNDATION Fieldbus, DeviceNet • Ex Approval: ATEX, IECEx, FM, UL, CSA • Multi-lingual display and touchpad keypad • Comprehensively self-diagnostic	3/43	SIMATIC PDM
	Designed for the general industry environment. The obstructionless performance of the MAG 1100 is unaffected by the suspended solids, viscosity and temperature challenges.	**Flow sensors MAG 1100 and MAG 1100 HT** • Metering tube DN 2 ... 100 (1/12 ... 4“) flangeless design. • Corrosion-resistant AISI 316 stainless steel housing. • Highly resistant liner (ceramic or PFA) and electrodes fitting most extreme process media. • Temperature rating up to 200 °C (390 °F) • Ex Approval: ATEX, FM	3/48	
	Specially designed for the food & beverage and pharmaceutical industry. CERTIFIED HYGIENIC ENGINEERING & DESIGN EUROPEAN GROUP EHEDG TYPE EL SEPTEMBER 2001	**Flow sensor MAG 1100 F** • AISI 316 stainless steel enclosure • Hygienic seal, 3A and EHEDG • Easy to clean • Supplied with connections according to your specification • Ex Approval: ATEX, FM	3/56	
	The MAG 3100 series with its flexibility in the choice of liner, electrode and flange material allows the measurement of even the most extreme process media.	**Flow sensors MAG 3100 and MAG 3100 HT** • For a wide range of pipe dimensions: DN 15 ... 2000 (½ ... 78”) • Wide range of liner and electrode materials • High-temperature version for application with temperatures up to 180 °C (355 °F) • High-pressure solutions	3/78	

© Siemens 2021

Overview (continued)

	Application	Description	Catalog page	Software for parameterization
	The SITRANS FM MAG 3100 P sensor is designed to meet the most common specifications within the chemical and process industries.	**Flow sensor MAG 3100 P** • For pipe dimensions DN 15 ... 300 (½ ... 12") • Fully welded construction that is extremely rugged and can withstand special process conditions using extreme measurement electrodes • Approvals for hazardous areas: ATEX, FM, CSA, IEcEx • Comprehensive self-diagnostic for error indication and error logging • Temperature resistant up to 150 °C (302 °F)	3/82	
	Designed for all water and waste water applications in water plants and industrial applications.	**Flow sensor MAG 5100 W** • Metering tube DN 15 ... 1200 (DN 2000) (½"" ... 48" (78“)) • Hard Rubber or EPDM lining • Integral grounding electrodes as standard • Increased low flow accuracy for water leak detection • Drinking water approvals and custody transfer approvals , OIML R 49, MI-001 and PTB K7.2	3/91	
	The SITRANS FM100 is an electromagnetic flow meter for measuring and monitoring small and medium flows.	**Flow meter SITRANS FM100** NEW • Connection ½", ¾", 1", 2" • Flow- and temperature measurement • IO-Link communication • Dosing function with external control output • Flexible usage in different applications due to two individual configurable outputs • Bidirectional measuring • Robust stainless-steel design	3/104	
SITRANS FM electromagnetic flowmeters – High-power AC magnetic flowmeter				
	Designed for heavy-duty applications like pulp & paper stock over 3%; heavy mining slurries and mining slurries with magnetic particles.	**Transmitter Transmag 2** • Magnetic flowmeter with a very strong pulsed AC magnetic field • PROFIBUS PA or HART communication • Comprehensive self-test function	3/109	SIMATIC PDM
	Designed for heavy-duty applications like pulp & paper stock over 3%; heavy mining slurries and mining slurries with magnetic particles.	**Flow sensor MAG 911/E** • Metering tube: DN 15 ... DN 1000 (½" ... 40") • Metering tube liner: Hard Rubber, Linatex, Soft rubber, PTFE and Novolak • Integral smartPLUG for storing of calibration values • Multi-lingual display and touchpad keypad • Only remote version	3/109	
SITRANS FM electromagnetic flowmeters – Battery-operated magnetic water meter				
	Battery-operated electromagnetic water meter for water applications within abstraction, distribution network and revenue metering.	**Water meter MAG 8000** • Battery- and/or mains power operated water meter • Metering tube DN 25 ... 1200 (1 ... 48") • Remote and compact installation IP68/NEMA 6P enclosure • Custody transfer approval: PTB K7.2, OIML R 49 and MI-001 • Drinking water approvals • Communication modules: GSM/GPRS, Modbus, Encoder	3/119	SIMATIC PDM and Flow Tool

© Siemens 2021

Overview (continued)

	Application	Description	Catalog page	Software for parameterization
SITRANS FC mass flowmeters				
	Designed for a variety of liquid and gas applications in the process Industry. Measurement of mass flow, density, temperature and fraction.	**Flowmeters FC330 (Dual tube design)** • DN 15, DN 25, DN 50, DN 80, DN 100 and DN 150 • Flow from 70 ... 860 000 kg/h - water • Pipe material: AISI 316L or Nickel-Alloy C4 • Accuracy, typically: Flow: ≤ 0.1 % or 0.2 % version, Density: down to ≤ 0.002 g/cm³ • Liquid temperature/pressure: -50 ... +205 °C (-58 ... +400 °F)/ up to 100 bar (1450 psi) • Approvals: ATEX, IECEx, cCSAus, CRN, PED (depending on configuration)	3/176	
	Designed for a variety of liquid and gas applications Measurement of mass flow, density, temperature Modbus RS 485-RTU communication for direct integration into skids, OEM and pre-assembled plant packages	**Flowmeters FC310 (Dual tube design)** • DN 15, DN 25, DN 50, DN 80, DN 100 and DN 150 • Flow from 70 ... 860 000 kg/h • Pipe material: AISI 316L or Nickel-Alloy C4 • Accuracy, typically: Flow: ≤ 0.1 % or 0.2 % version, Density: down to ≤ 0.002 g/cm³ • Liquid temperature/pressure: -50 ... +205 °C (-58 ... +400 °F)/ up to 100 bar (1450 psi) • Approvals: ATEX, IECEx, cCSAus, Germanischer Lloyd/det Norske Veritas, Bureau Veritas, Lloyds of London, American Bureau of Shipping (depending on configuration)	3/180	
	Designed for a variety of liquid and gas applications Measurement of mass flow, density, temperature and fraction	**Flowmeters FC430 (Dual tube design)** • DN 15, DN 25, DN 50 • Flow from 20 ... 70 700 kg/h - water • Pipe material: AISI 316L • Accuracy, typically: Flow: ≤ 0.1 %, Density: down to 0.005 g/cm³ • Liquid temperature/pressure: -50 ... +200 °C (-58 ... + 392 °F)/ up to 100 bar (1450 psi) • Approvals: ATEX, IECEx, EAC Ex, cCSAus, NEPSI, CRN, PED, Germanischer Lloyd/det Norske Veritas, Bureau Veritas, Lloyds of London, American Bureau of Shipping	3/193	
	Designed for a variety of liquid and gas applications Measurement of mass flow, density, temperature Modbus RS-485 RTU communication for direct integration into skids, OEM and pre-assembled plant packages	**Flowmeters FC410 (Dual tube design)** • DN 15, DN 25, DN 50 • Flow from 20 ... 70 700 kg/h • Pipe material: AISI 316L • Accuracy, typically: Flow: ± 0.1 %, Density: down to ± 0.005 g/cm³ • Liquid temperature/pressure: -50 ... +200 °C (-58 ... +392 °F)/ up to 100 bar (1450 psi) • Approvals: ATEX, IECEx, EAC Ex, cCSAus, NEPSI, Germanischer Lloyd/det Norske Veritas, Bureau Veritas, Lloyds of London, American Bureau of Shipping	3/197	

© Siemens 2021

Overview (continued)

	Application	Description	Catalog page	Software for parameterization
	Designed for low flow applications	**Flowmeter MASS 2100 and FC300 with transmitter FCT010 or FCT030 (single tube design)** • MASS 2100: DI 1.5, DI 3, DI 6, DI 15 • FC300: DN 4 • Flow from 0.1 ... 5600 kg/h • Pipe material: Stainless steel AISI 316L/ 1.4435; Hastelloy C22/2.4602 • Accuracy, typically: - Flow: down to 0.1 % - Density: down to 0.0005 g/cm^3 • Liquid temp./pressure: -50 ... +180°C (-58 ... +356 °F) / Up to 410 bar (5946 psi) • Approvals: ed according to ATEX, IECEx, c-UL-us, CRN, PED	3/203	
	SITRANS FCT070 can be connected to all Coriolis type Sensors FCS300; FCS400; MASS 2100 and FC300 DN4 FCT070 can be used for machine builders and in the process industry plants. The meters are suitable for measuring on liquid and gas. With ET 200SP ST & HF the SITRANS FCT070 can be installed decentralized in small stations, with fast communication to the control room. The faceplates for TIA-Portal and PCS 7 offer the direct full remote access to the flow meter.	**Transmitter SITRANS FCT070** NEW • Easy integration into automation process control as TIA portal and PCS7 • Cost effective integration of Coriolis flow meters for PLC controlled machines • SITRANS FCT070 is a ET 200SP technology module and can combined with all other SIMATIC ET 200S SP ST & HF modules • Fast and trouble-free communication between the flow meter and the PLC through digital data communication with up to 10 ms update rate • ATEX Zone 2 FM Class 1 Div 2 approvals. • Included advanced batch functionality without additional modules.	3/164	
SITRANS FS Inline ultrasonic flowmeters				
	SITRANS FST030 Inline is designed for all ultrasonic flow metering. FST030 is released for water application on SONOKIT up to all pipe sizes in dual path	**SITRANS FST030 transmitter** • For SONOKIT up to DN 3000 and more • 1 or 2 path option • Analog output and relay • FDK085X6329 - HART • FDK085X6366 - Modbus	3/329	SIMATIC PDM
	SITRANS FUS060 is a time-based transmitter designed for ultrasonic flowmetering in pipes for the F US inline industry series up to DN 3000	**SITRANS FUS060 transmitter** • Die cast aluminum enclosure • Ex approved according to ATEX • HART communication + 1 analog output, 1 digital output for frequency or pulse and 1 relay output for alarms and flow direction • PROFIBUS PA communication with 1 digital output for frequency or pulse	3/252	SIMATIC PDM
	SITRANS FUS080 is a time-based transmitter designed for ultrasonic flowmetering in pipes for the SONOKIT, FUS380 and FUE380 series up to DN 1200	**SITRANS FUS080/FUE080 transmitter** • Battery or mains-powered • Easy one-button operation • Bidirectional measuring • IrDA optical eye communication • Robust poyamide enclosure	3/259	SIMATIC PDM

© Siemens 2021

Overview (continued)

	Application	Description	Catalog page	Software for parameterization
	The main application for SONO 3300 ultrasonic flowmeters is to measure the volume flow of: • Water and treated waste water • Hot water/cooling systems	**SONO 3300/FUS060** • ATEX-approved • DN 50 … DN 500 (2" … 12") steel pipes • PN 10 ... PN 40 or class 150 ... class 300 pressure rates • Flow 0.3 … 3 200 m^3/h (1.3 ... 14 089 GPM) • No pressure drop • FUS060 transmitter for separate mounting • Signal cables from sensor to transducer are highly protected from aggressive environment by stainless steel pipes	3/268	SIMATIC PDM
	The main application for SONO 3100 ultrasonic flowmeters is to measure the volume flow of: • Water and treated waste water • District heating systems	**SONO 3100/FUS060** • DN 100 ... DN 600 (4" ... 24") • Pipe in carbon steel • Transducers can be replaced under pressure • FUS060 transmitter for separate mounting • ATEX-approved • Measure of all liquids less than 350 Cst, conductive or non-conductive • No pressure drop • 1-track, 2-path; 4-path on request • Special material on request	3/273	SIMATIC PDM
	Installation of one, two or four transducer sets in existing concrete or steel pipes. Typically installed in pipes with large diameters or in hot/cold water applications	**SONOKIT** • FUS060 or FUS080 transmitter for separate mounting • DN 100 ... 3000 (4 ... 120") • Control and display unit • Temperature of medium: -20 ... +200 °C (-4 ... +395 °F) • Installation on empty pipes or pipes under pressure (hot-tap installation) • Standard 1-path or 2-path (4-path on request)	3/282	SIMATIC PDM
	Battery or mains-powered ultrasonic flowmeter for use within water-based district heating, cooling systems and utility. The FUS380 can also be used for water irrigation systems. SITRANS FUS380/FUE380 are designed to work with the SITRANS FUE950 energy calculator.	**FUS380/FUE380** • FUS380/FUE380: DN 50 ... 1200 (2 ... 48") • FUE380: Approved for custody transfer according to MID MI004 (according to EN 1434 Class 2, OIML R 75) • FUS380/FUE380: Red brass or painted carbon steel flanges and metering tube. AISI transducers • Water temperatures 2 … 200 °C (35.6 ... 392 °F) • Battery or mains-powered	3/292	SIMATIC PDM
	Universal thermal energy calculator for district heating and cooling applications.	**SITRANS FUE950** • Battery or mains-powered • 24 periods memory • 2 ports for plug-in modules as data output, extra input, M-Bus, RS 232/RS 485, current output • Complete set with temperature sensors and pockets • MID heating approval, PTB K7.2 cooling approval, MI004 type approval	3/311	

© Siemens 2021

Overview (continued)

	Application	Description	Catalog page	Software for parameterization
SITRANS FS clamp-on ultrasonic flowmeters				
	SITRANS FS clamp-on ultrasonic flowmeters provide highly accurate measurement while minimizing installation time and maintenance expense. These dedicated flowmeters are suitable for a wide variety of liquid applications, including those in the: • Water Industry • Wastewater Industry • HVAC Industry • Power Industry • Processing Industry • Hydrocarbon Industry	**SITRANS FS230** • Suitable for virtually any liquid, even those with high aeration or suspended solids • Hydrocarbon functions are ideal for applications carrying crude oil, refined petroleum or liquefied gas • Choice of single and dual path versions to suit your operating conditions and requirements. • Easy installation; no need to cut pipe or stop flow • Minimal maintenance; external sensors do not require periodic cleaning • Easy to read display with intuitive menu system • Hazardous area approvals for ATEX Zone 2, IECEx Zone 2 FMc Class I Div. 2	3/322	
	SITRANS FS220 basic is a fast-to-install clamp-on ultrasonic flowmeter for accurate measurements with minimal maintenance. Based on latest technology, this flow meter is ideal suitable for applications like: • Water Industry • Wastewater Industry • HVAC Industry • Power Industry • Process controls	**SITRANS FS220** • Easy installation during process condition, no need to cut pipe or stop flow • Minimal maintenance; external sensors do not require periodic cleaning • No media-contacting parts, no wear, no pressure drop, no energy loss • Wide turn-down ratio, very sensitive in low flow condition • Optional WideBeam technology ensures high performance • Compatible with all previously fielded transit time sensors	3/344	
	The thickness gauge can be used in any field application where there is a need for flow measurement. Including but not limited to: • Water and waste water • Energy measurement • Oil and gas industries	**Thickness gauge** The hand-held micro-processor controlled gauge is designed to measure the thickness of various metallic or non-metallic pipes. • Materials include steel, aluminum, titanium, plastics and ceramics • Measurements shown in millimeter or inches • Simple-to-read 4-digit LCD display • Weights 150 g (5.3 oz) • Battery operation for 250 h	3/357	
SITRANS FX Vortex flowmeter				
	Measurement of steam, gases and liquids in: • Chemical • HVAC / Power plants • Oil & Gas • Food & Beverage • Pharma	**SITRANS FX300** • Flange DN 15 … DN 300 (½" … 12") • Sandwich DN 15 … DN 100 (½" … 4") • 2-wire device 4 ... 20 mA, with integrated temperature and pressure sensors for compensation • HART communication • Medium temp.: -40 ... +240 °C (-40 ... +464 °F) • Medium pressure: up to 100 bar (1450 psi) • Hazardous area approvals: FM, CSA, ATEX • Compact or remote mounted transmitter	3/361	

© Siemens 2021

Overview (continued)

	Application	Description	Catalog page	Software for parameterization
	Very versatile and flexible for use in many process applications. Flow sensors combines flow, pressure and temperature measurement into one user-friendly, two-wire device. • Measurement of saturated steam and superheated steam • Heat metering of steam and hot water • Measurement of consumption in compressed air systems • Evaluation of Free Air Delivery (FAD) • SIP and CIP processes in the food, beverage and pharmaceutical industries • Measurement of conductive and non-conductive liquids • Safety-related measurement in SIL applications (SIL2).	**SITRANS FX330** • Integrated pressure and temperature compensation • Temperature compensation for saturated steam included as standard • SIL2 certified according to IEC 61508 Edition 2 • Use in hazardous areas • Integrated reduction of nominal diameter for space-saving and economic installation • Exchange of electronics without loss of calibration and configuration data • Gross and net heat calculation to support energy management • Remote version with cable length up to 50 m (164 ft)	3/379	
SITRANS FVA variable area meters				
	Measurement of flow of liquids and gases, also highly suitable for corrosive media, high temperatures and high pressures.	**FVA250** • All-metal variable area meter with various float materials • Connections: DN 15 ... DN 100 (½" ... 4") • Temperature of medium: -20 °C ... +300 °C (-4 ... +572 °F) • Optionally available with analog output or contacts	3/395	
SITRANS FP differential pressure flow measurement *NEW*				
	SITRANS FP product line is suitable for all kinds of applications – liquids, dry or wet gases and steam. Due to the robust though variable design it has been and still is one of the main technologies for flow measurement in various industries. A new digital sizing process ensures minimum effort during presales and full traceability in aftersales. The differential pressure portfolio consists of • pitot tube measuring system SITRANS FPS300 • differential pressure sensors acc. to ISO 5167 (orifices) SITRANS FPS200	• Suitable for a vast range of different applications • Available as pre-mounted compact system as well as remote parts • Advanced intelligent sizing procedure • Web-based sizing and data storage enables full traceability and easy communication • All benefits of SITRANS P320 available	3/405	

© Siemens 2021

Overview

Criteria for selection of flowmeter

Each method for measuring flow has specific properties, and each flow measuring point is characterized by specific requirements. The table shown below compares the properties of the various measuring instruments and thus provides assistance in selection of the optimum device.

This section of the field device catalog includes the following instruments for measuring flow:

- Electromagnetic
- Coriolis mass flow
- Ultrasonic
- Vortex volumetric- and mass flow
- Variable area meter
- Orifice plate

Measurement principle		**Electromagnetic**	**Coriolis**	**Ultrasonic (inline)**	**Ultrasonic (clamp-on)**	**Vortex**	**Variable area meter**	**Orifice plate**
Medium		Liquid (conductive)	Liquid or gas	Liquid	Liquid or gas	Steam/vapor, gases, liquid	Liquid or gas	Liquid, vapor, gas
Nominal size		DN 2 … 2000 (0.08" … 78")	1.5 … 150 mm (0.06" … 6")	DN 50 ... 3000 (2" ... 120")	6.4 mm ... 9.14 m (0.25" ... 360")	DN 15 … 300 (½" … 12")	DN 10 … 100 (0.4" … 4") G½" … G3"	DN 10 … 1000 (0.4" … 40")
Temperature range	°C (°F)	-40 … +200 (-40 … +392)	-50 … +180 (-58 … +356)	-20 ... +200 (-4 ... +392)	-40 ... +120 (-40 ... +248)	-40 ... +240 (-40 ... +464)	-20 … +300 (-4 … +572)	-200 … +500 (-328 … +932)
Max. pressure	bar (psi)	160 (2 320), optional higher	Up to 410 (Up to 5 950)	40 (580)	Unlimited	100 (1 450)	100 (1 450)	315 (4 569)
Accuracy	%	± 0,25 or ± 0,4	± 0,1 or ± 0,15	± 0,5 … ± 2	0,5 ... 1,0 % of flow, for velocities greater than 0,3 m/s (1 ft/s)	± 0,75 … ± 1	± 1.6 ... ± 2.0	± 0,5 … ± 2
Repeatability	%	0,1/0,2	0,05	0,25	0,15% of flow, for velocities greater than 0,3 m/s (1 ft/s)	0,1	0,5	0,5
Dynamic response range		1:100	1:100	1:100	1:100	1:25	1:10	1:6
Start-of-scale value	m/s (ft/s)	0 (0)	0 (0)	0,1 (0.33)	0 (0)	0,4 (1.31) 2,0 (6.56)	0,2 (0.66)	Re > 500
Full-scale value					± 36/120			Re < 10^8
• For liquids	m/s (ft/s)	0,25 … 10 (0.825 … 32.8)	10 (32.8)	10 (32.8)	± 12/40	10 (32.8)	3,5 (11.4)	3 (9.8)
• For steam/vapor, gases	m/s (ft/s)		Approx. 300 (1000)		± 12/40	80 (262.5)	60 (197)	50/25 (164/82)
Measured values								
Volume flow		•	•	•	•	•	•	•
Sound velocity				•	•			
Sound amplitude				•	•			
Density			•		•			
Mass flow			•	•	•	•		
Bidirectional measurement		•	•	•	•			•
Use								
• For custody transfer		•	•	•	•			
• As batching system		•	•		•			
• In viscosity range	mPa·s (cp)	0,1 … 100 000 (0.1 … 100 000)	0 ... 100 000 (0 ... 100 000)	0 ... 350 (0 ... 350)	0,5 ... 2800 (0.5 ... 2800)	0 … 10 (0 … 10)	0,5 … 100 (0.5 … 100)	0 … 10 (0 … 10)
Power supply		Mains or battery	Mains	Mains or battery	90... 240 V AC, 50...60 Hz, 15 VA or 9 ... 36 V DC, 10 W	2-wire	non	2-wire

© Siemens 2021

3

Overview (continued)

Communication solutions

Product	HART	PROFIBUS PA	PROFIBUS DP	FOUNDATION Fieldbus H1	DeviceNet	Modbus RTU	GSM/GPRS
SITRANS FM MAG 5000	• 1) 2) 4)						
SITRANS FM MAG 6000	• 1) 2) 4) 5)	• 1) 5) 6) 7)	• 1) 5) 6) 7)	• 2) 4) 5)	• 5)	• 1) 5) 10)	
SITRANS FM MAG 5000/6000 CT[8)]							
SITRANS FM MAG 6000 I	• 1) 2) 4) 5)	• 1) 5) 6) 7)	• 1) 5) 6) 7)	• 2) 4) 5)	• 5)	• 1) 5) 10)	
SITRANS FM MAG 6000 I Ex	• 1) 2) 4) 5)	• 1) 5) 6) 7)		• 2) 4) 5)			
SITRANS FM TRANSMAG 2	• 1) 4)	• 1) 6)					
SITRANS FM MAG 8000						• 1) 3) 10) 11) 12)	• 14)
SITRANS F C FCT010						• 1) 10)	
SITRANS F C FCT030	• 1) 2) 4) 8)	• 1) 2) 4) 8)	• 1) 2) 4) 8)			• 1) 2) 4) 8)	
SITRANS F C MASS 6000	• 1) 2) 4) 5)	• 1) 5) 6) 7)	• 1) 5) 6) 7)	• 2) 4) 5)	• 5)	• 1) 10)	
SITRANS F C MASS 6000 Ex d	• 1) 2) 4) 5)	• 1) 5) 6) 7)		• 2) 4) 5)	• 5)		
SIFLOW FC070			• 13)			• 1) 10) 11)	
SITRANS FUS060	• 1)	• 1) 6)					
SITRANS FUS080		• 1) 8) 12)					
SITRANS FUS1010[9)]						• 9) 10) 11)	
SITRANS FX300	• 1)						
SITRANS FX330	• 1)						
SITRANS P DS III Differential pressure and flow	• 1) 2)	• 1) 2) 7)		• 2)			

1) Supports SIMATIC PDM
2) Supports AMS
3) Supports Siemens Flow Tool
4) Supports HH275/375
5) Pluggable add-on module
6) Profile 2
7) Profile 3
8) CT versions are not approved with communication modules.
9) All wall mount models
10) RS 485
11) RS 232
12) IrDA (Infrared)
13) Connected to ET200M PROFIBUS interface
14) Only with 7ME6810

© Siemens 2021

Overview

SITRANS FM electromagnetic flowmeters are designed for measuring the flow of electrically conductive mediums.

The full SITRANS FM program consists of three different types of flowmeters making Siemens unique in that it covers all possible applications where electromagnetic flowmeters are a suitable match:

Modular pulsed DC flowmeters cover all ordinary applications within all industries. The wide variety of combinations and versions from the modular system means that ideal adaptation is possible to each measuring task and application.



SITRANS FM products

Battery-operated water meters (fully electronic) are the perfect match for drinking water applications like network distribution, revenue metering and irrigation where mains power is not available. In addition, it complies with the MID (EU) and OIML R 49 water meter standards and has the MCERTS certificate.



SITRANS FM MAG 8000

High-powered flowmeters are used for difficult applications where other flowmeters cannot stand up to the task. This flowmeter can handle liquids and heavy slurries in industries such as mining, cement and pulp and paper.



TRANSMAG 2



SITRANS FM MAG 911/E

© Siemens 2021

Benefits



Greater flexibility

- Wide product program
- Compact or remote installation using the same transmitter and sensor
- USM II communication platform for easy integration with all systems

Easier commissioning of MAG 5000, 6000, 6000 I

All SITRANS FM pulsed DC electromagnetic flowmeters feature a unique SENSORPROM memory unit which stores sensor calibration data and transmitter settings for the lifetime of the product.

At commissioning the flowmeter commences measurement without any initial programming.

The factory settings matching the sensor size are stored in the SENSORPROM unit. Also customer specified settings are downloaded to the unit. Should the transmitter be replaced, the new transmitter will upload all previous settings and resume measurement without any need for reprogramming.

Further, the "fingerprint" used in connection with the SITRANS FM Verificator is stored during the initial sensor calibration.

Easier service

Transmitter replacement requires no programming. SENSORPROM automatically updates all settings after initialization.

Room for growth

USM II the Universal Signal Module with "plug & play" simplicity, makes it easy to access and integrate the flow measurement with almost any system and bus-protocol and it ensures the flowmeter will be easy to upgrade to future communication/bus platforms.

Application

Electromagnetic flowmeters are suitable for measuring the flow of almost all electrically conductive liquids, pastes and slurries.

A prerequisite is that the medium must have a minimum conductivity. The temperature, pressure, density and viscosity have no influence on the result.

The main applications of the electromagnetic flowmeters can be found in the following sectors:

- Water and waste water
- Chemical industries
- Pharmaceutical industries
- Food and beverage industry
- Mining, aggregates and cements industries
- Pulp and paper industry
- Steel industry
- Power; utility and chilled water industry

The wide variety of combinations and versions from the modular system means that ideal adaptation is possible to each measuring task.

© Siemens 2021

Application (continued)

Please see Product selector on the Internet, because some constrains might be related to some of the features:
http://www.pia-selector.automation.siemens.com

PIA Life Cycle Portal
The tool for Engineering, Ordering, Installation and Operation













	FM100	MAG 1100	MAG 1100 HT	MAG 1100 F	MAG 3100	MAG 3100 HT	MAG 3100 P	MAG 5100 W	MAG 5100 W	MAG 911/E	MAG 8000/ MAG 8000 CT
	7ME6010	7ME6110	7ME6120	7ME6140	7ME6310	7ME6320	7ME6340	7ME6520	7ME6580	7ME5610	7ME6810 7ME6820
Industry											
Water/waste water		XX			XX		X	XXX	XXX	X	XXX[1]
Chemical	•	XXX	XXX	XX	XXX	XXX	XXX	X			X
Pharmaceutical	•	XX	XX	XXX	XX	XX	XX	X	X		X
Food and beverage		XX		XXX	X	X	X	X	X		X
Mining, aggregates and cement		XX			XXX			X	X	XXX	X
HPI		XX	X		XX	X	XX	X	X		X
Other	•	XX	XX	XX	XX	XX	XX	XX	XX	XXX	X
Design											
Compact	•	•		•	•	•	•	•	•		•
Remote	•	•	•	•	•	•	•	•	•	•	•
Constant field (DC)		•	•	•	•	•	•	•	•		•
Alternating field (AC)										•	
Battery-operated constant field (DC)											•
Size											
DN 2 ($^1/_{12}$")		•									
DN 3 ($^1/_8$")		•									
DN 6 (¼")		•									
DN 10 ($^3/_8$")		•		•							
DN 15 (½")	•	•	•	•	•	•	•	•		•	
DN 25 (1")	•	•	•	•	•	•	•	•	•	•	•
DN 32 (1¼")				• [2]							
DN 40 (1½")		•	•	•	•	•	•	•	•	•	•
DN 50 (2")	•	•	•	•	•	•	•	•	•	•	•
DN 65 (2½")		•	•	•	•	•	•	•	•	•	•
DN 80 (3")		•	•	•	•	•	•	•	•	•	•
DN 100 (4")		•	•	•	•	•	•	•	•	•	•
DN 125 (5")					•	•	•	•	•	•	•
DN 150 (6")					•	•	•	•	•	•	•
DN 200 (8")					•	•	•	•	•	•	•
DN 250 (10")					•	•	•	•	•	•	•
DN 300 (12")					•	•	•	•	•	•	•
DN 350 (14")					•			•	•	•	•
DN 400 (16")					•			•	•	•	•
DN 450 (18")					•			•	•	•	•
DN 500 (20")					•			•	•	•	•
DN 600 (24")					•			•	•	•	•
DN 700 (28")					•			•	•	•	•
DN 750 (30")					•			•	•	•	•
DN 800 (32")					•			•	•	•	•
DN 900 (36")					•			•	•	•	•
DN 1000 (40")					•			•	•	•	•
DN 1050 (42")					•			•	•		•
DN 1100 (44")					•			•	•		•
DN 1200 (48")					•			•	•		•

• = available, **X** = can be used, **XX** = often used, **XXX** = most often used

[1] Not suitable for wastewater applications

[2] Only in combination with DN 32 adapter A5E02054637, A5E02218297, FDK:083G2120 and FDK:083G2160

© Siemens 2021

Application (continued)

Please see Product selector on the Internet, because some constrains might be related to some of the features:
http://www.pia-selector.automation.siemens.com

PIA Life Cycle Portal
The tool for Engineering, Ordering, Installation and Operation













	FM100	MAG 1100	MAG 1100 HT	MAG 1100 F	MAG 3100	MAG 3100 HT	MAG 3100 P	MAG 5100 W	MAG 5100 W	MAG 911/E	MAG 8000/ MAG 8000 CT
	7ME6010	7ME6110	7ME6120	7ME6140	7ME6310	7ME6320	7ME6340	7ME6520	7ME6580	7ME5610	7ME6810 7ME6820
Size (continued)											
DN 1400 (56")					•				•		
DN 1500 (60")					•				•		
DN 1600 (66")					•				•		
DN 1800 (72")					•				•		
DN 2000 (78")					•				•		
Process connection											
Wafer design		•	•								
Sanitary process connections				•							
Flanges					•	•	•	•	•	•	•
Pressure ratings[1]											
EN 1092-1 PN 6					•				•		
EN 1092-1 PN 10					•	•	•	•	•	•	•
EN 1092-1 PN 16		•		•	•	•	•	•	•	•	•
EN 1092-1 PN 25					•	•				•	
EN 1092-1 PN 40		•	•	•	•	•	•	•	•	•	•
EN 1092-1 PN 63					•						
EN 1092-1 PN 100					•						
ANSI B 16.5 class 150					•	•	•	•	•	•	•
ANSI B 16.5 class 300					•	•				•	
ANSI B 16.5 class 600					•						
ASME B 16.47 class 150					•						
AWWA class D					•			•	•	•	•
AS 2129 table E					•	•					
AS 4087, PN 16					•	•		•	•		•
AS 4087, PN 21					•	•					
AS 4087, PN 35					•	•					
JIS B 2220:2004 K10					•			•	•	•	
JIS B 2220:2004 K20					•						
Accuracy											
Flow error ± 0.2 % of rate		•	•	•	•	•	•	•	•		•
Flow error ± 0.4 % of rate		•	•	•	•	•	•	•	•		•
Flow error ± 0.5 % of rate										•	
Repeatability[2]											
0.1 %		•	•	•	•	•	•	•	•		
0.2 %	•									•	
Grounding electrodes											
Grounding electrodes, incl.					•		•	•	•	(•)	•

• = available

[1] Pressure may be limited by the liner material chosen.

[2] Of actual flow for v ≥ 0.5 m/s (15 ft/s) and conductivity > 10 µS/cm

© Siemens 2021

Application (continued)

Please see Product selector on the Internet, because some constrains might be related to some of the features:
http://www.pia-selector.automation.siemens.com

PIA Life Cycle Portal
The tool for Engineering, Ordering, Installation and Operation













	FM100	MAG 1100	MAG 1100 HT	MAG 1100 F	MAG 3100	MAG 3100 HT	MAG 3100 P	MAG 5100 W	MAG 5100 W	MAG 911/E	MAG 8000/ MAG 8000 CT
	7ME6010	7ME6110	7ME6120	7ME6140	7ME6310	7ME6320	7ME6340	7ME6520	7ME6580	7ME5610	7ME6810 7ME6820
Materials/temperature:											
Liner material/max. temperatures											
NBR: 70 °C (158 °F)								•			
EPDM: 70 °C (158 °F)					•			•			•
Soft rubber: 70 °C (158 °F)					•					•	
PTFE: 100 °C (212 °F)					•						
PTFE: 150 °C (302°F)						•	•			•	
PTFE: 180 °C (356 °F)						•				•	
Ebonite: 95 °C (203 °F)					•				•[3]	•	
Linatex: 70 °C (158 °F)					•					•	
Ceramic: 150 °C (302 °F)		•		•							
Ceramic: 200 °C (392 °F)			•[2]								
PFA: 100 °C (212 °F)					•						
PFA: 150 °C (302 °F)		•		•		•	•				
Novolak: 130 °C (266 °F)										•	
Electrodes											
Stainless steel	•				•	•				•	
Hastelloy C		•		•	•	•	•	•	•	•	•
Platinum		•	•	•	•	•	(•)[1]			•	
Titanium					•	•				•	
Tantalum					•	•	(•)[1]			•	
Ceramic coated stainless steel					•						
Ceramic coated Hastelloy C					•						
Flange/housing material											
Carbon steel					•	•	•	•	•	•	•
Stainless steel/carbon steel	•				•	•				•	
Polished stainless steel		•	•	•	•	•					
Approvals											
Custody transfer											
Cold Water – MI-001 (EU)								•			•
Cold water approval - OIML R 49/OIML R 49 MAA											•[4]
NMI 10 (Australia)								•[4]			•[4]
Chilled water pattern approval - PTB K 7.2								•[4]			
OE 12/C 040 (Austria) Chilled water pattern approval								•			
KIWA water approval								•			•
Marine											
ABS								•			
Bureau Veritas								•			
DNV-GL								•			
Lloyd's Register								•			

• = available

[1] Only for PTFE

[2] Ex sensor: 180 °C (356 °F)

[3] 70 °C (158 °F)

[4] For verification submit Product Variation Request (PVR)

© Siemens 2021

Application (continued)

Please see Product selector on the Internet, because some constrains might be related to some of the features:
http://www.pia-selector.automation.siemens.com

PIA Life Cycle Portal
The tool for Engineering, Ordering, Installation and Operation













	FM100	MAG 1100	MAG 1100 HT	MAG 1100 F	MAG 3100	MAG 3100 HT	MAG 3100 P	MAG 5100 W	MAG 5100 W	MAG 911/E	MAG 8000/ MAG 8000 CT
	7ME6010	7ME6110	7ME6120	7ME6140	7ME6310	7ME6320	7ME6340	7ME6520	7ME6580	7ME5610	7ME6810 7ME6820
Approvals (continued)											
Hazardous areas											
ATEX – 2 GD (Zone 1/21)		•	•	•	•	•	•				
IECEx Zone 1/21					•	•	•				
FM Class I/II/III, Div 1					•[7]	•[7]	•[7]				
FM Class I, Zone 1/21					•	•	•				
FM - Class I, Div 2		•	•	•	•	•	•	•	•		
FM - Class I, Zone 2		•	•	•	•	•	•	•	•		
CSA Class I, Zone 1/21					•	•	•				
CSA - Class I, Div 2					•	•	•	•	•		
NEPSI Zone 1					•		•				
EAC Ex		•	•	•	•	•	•				
Hygienic											
EHEDG				•							
3A				•							
EC 1935:2004 European food contact material				•							
Drinking water											
WRAS (WR_C)					•			•[2]	•		•
ANSI/NSF 61 (US) [7]					•[3]			•	•		•
ACS (FR)					•			•			•
Belgaqua (B)					•			•			•
DVGW-W270 (D)					•			•			•
KIWA (NL)					•			•			•
AS/NZS 4020 (AU)					•			•			•
Other											
CRN (Canada)		•[8]			•	•	•	•	•		•
FM Fire Service (class number 1044)								•[6]			•[6]
MCERTS (GB)					•[4]			•[2]			•
EAC (Russia, Belarus, and Kasakhstan)		•	•	•	•	•	•	•	•	•	•
CPA (China)		•	•	•	•	•	•	•	•	•	•
VdS								•[5]			
Verificator											
Verificator compatible		•[1]	•[1]	•[1]	•[1]	•[1]	•[1]	•[1]	•[1]		

• = available

[1] Only in combination with MAG 5000 and MAG 6000 transmitters

[2] EPDM liner

[3] Only EPDM with Hastelloy electrodes

[4] EPDM or PTFE liner with AISI 316 or Hastelloy electrodes

[5] Only valid for DN 50 to DN 300 (2" to 12")

[6] Sizes: DN 50, DN 80, DN 100, DN 150, DN 200, DN 250, and DN 300 (2", 3", 4", 6", 8", 10", and 12") with ANSI B16.5 Class 150 flanges

[7] Only DN 15 to DN 300 (½" to 12") with MAG 6000 I Ex, compact mounted

[8] Only PFA liner

© Siemens 2021

Application (continued)

Please see Product selector on the Internet, because some constrains might be related to some of the features:
http://www.pia-selector.automation.siemens.com

PIA Life Cycle Portal
The tool for Engineering, Ordering, Installation and Operation








	MAG 5000	MAG 6000	MAG 6000 I	MAG 6000 I Ex	MAG 6000 + Safety barrier	TRANSMAG 2	MAG 8000/ MAG 8000 CT
	7ME6910	7ME6920	7ME6930	7ME6930	7ME6920	7ME5034	7ME6810 7ME6820
Industry							
Water/waste water	**XXX**	**XXX**	**XX**	**X**		**X**	**XXX**
Chemical	**X**	**XX**	**XX**	**XXX**	**X**		**X**
Pharmaceutical	**X**	**XXX**	**XX**	**XXX**	**X**		**X**
Food and beverage	**XX**	**XXX**	**XX**				**X**
Mining, aggregates and cement	**XX**	**X**	**XX**	**X**		**XXX**	**X**
HPI	**X**	**X**	**X**	**XX**			**X**
Other	**XX**	**XX**	**XX**	**XX**		**XX**	**X**
Design							
Compact	•	•	•	•			•
Remote	•	•	•	•	•	•	•
Constant field (DC)	•	•	•	•	•		•
Alternating field (AC)						•	
Battery-operated constant field (DC)							•
Enclosure transmitter							
Polyamide, IP67	•	•					
Die-cast aluminum			•	•		•	
Stainless steel		•					•[1]
19" rack	•	•			•		
Front panel mounting	•	•			•		
Panel mounting	•	•			•		
IP66 wall mounting	•	•	•	•	•		
Accuracy							
Flow error ± 0.2 % of rate		•	•	•	•		•
Flow error ± 0.4 % of rate	•						•
Flow error ± 0.5 % of rate						•	
Repeatability[3]							
0.1 %	•	•	•	•	•		
0.2 %						•	
Communication							
HART	•	•	•	•	•	•	
PROFIBUS PA		•	•	•	•	•	
PROFIBUS DP		•	•		•		
FOUNDATION Fieldbus H1		•	•	•	•		
DeviceNet		•	•		•		
Modbus RTU/RS 485		•	•		•		•[2]
Encoder interface module (Sensus protocol) for Itron 200WP radio							•
GSM/GPRS module							•
Batching							
Batching		•	•	•	•		

• = available, **X** = can be used, **XX** = often used, **XXX** = most often used

1) IP68 enclosure

2) Modbus RTU also as serial RS 232

3) Of actual flow for v ≥ 0.5 m/s (1.5 ft/s) and conductivity > 10 µS/cm

© Siemens 2021

Application (continued)

Please see Product selector on the Internet, because some constrains might be related to some of the features:
http://www.pia-selector.automation.siemens.com

PIA Life Cycle Portal
The tool for Engineering, Ordering, Installation and Operation








	MAG 5000	MAG 6000	MAG 6000 I	MAG 6000 I Ex	MAG 6000 + Safety barrier	TRANSMAG 2	MAG 8000/ MAG 8000 CT
	7ME6910	7ME6920	7ME6930	7ME6930	7ME6920	7ME5034	7ME6810 7ME6820
Power supply							
24 V	• [1]	• [1]	•	•			•[1][2]
115 V - 230 V	•	•	•	•	•	•	•[2]
Battery							•
Approvals							
Custody transfer							
Cold water - MI-001 (EU)	•	•					•
Cold water approval - OIML R 49/OIML R 49 MAA							•
NMI 10 (Australia)		•[5]					•[5]
Chilled water pattern approval PTB K 7.2	•[5]	•[5]					•[5]
OE12/C 040 (Austria) Chilled water pattern approval	•	•					
KIWA water approval		•					•
Marine							
ABS	•	•					
Bureau Veritas	•	•					
DNV-GL	•	•					
Lloyd's Register	•	•					
Hazardous areas							
ATEX - 2G GD (Zone 1/21)				•	(•)[3]		
IECEx Gb Zone 1/21				•			
FM Class I/II/III, Div 1				•[4]			
FM Class I, Zone 1/21				•			
FM Class I, Div 2	•	•	•				
FM Class I, Zone 2	•	•	•				
CSA Class I, Zone 1/21				•			
CSA Class I, Div 2	•	•	•				
UL/C-UL-general safety	•	•			•		
NEPSI Zone 1				•			
EAC Ex				•	•		
Other							
FM Fire Service (1044)	•	•					•
KCs (South Korea)	•	•	•	•	•		
EAC (Russia, Belarus, Kazakhstan)	•	•	•	•	•	•	•
CPA (China)	•	•	•	•	•	•	•
VdS	•	•					
Other national approvals, see internet	•	•	•	•	•	•	•
Verificator							
Verificator compatible	•	•					

• = available

[1] 12/24 V AC/DC

[2] Main power with battery backup

[3] Only sensor in hazardous area

[4] Only with sensors sizes DN 15 to DN 300 (½" to 12") compact

[5] For verification submit Product Variation Request (PVR)

For more national approvals please check our internet page
http://support.automation.siemens.com/WW/view/en/10806954/134200

© Siemens 2021

Application (continued)

Practical examples of ordering

SITRANS FM compact installation



MAG 6000 transmitter + MAG 3100 sensor = MAG 6000 compact mounted on a MAG 3100 sensor

Example

Sensor	**7ME6310-3TC11-1JA1**
Pipe size	DN 100
Liner	Soft rubber
Electrodes	SS 316
Flanges	EN 1092-1, PN 16
Transmitter	**MAG 6000, Polyamide, 115 … 230 V AC**
Accuracy	± 0.2 % ± 1 mm/s
Supply	230 V AC

Note:
MAG 5000/6000 transmitters, sensors and communication modules are packed in separate boxes, the final assembly takes place during installation at the customer's place.

SITRANS FM remote installation

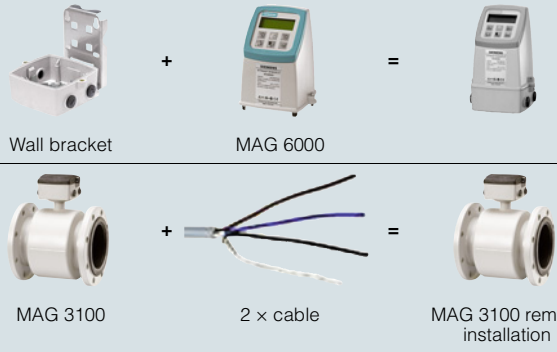

Wall bracket + MAG 6000 =

MAG 3100 + 2 × cable = MAG 3100 remote installation

Example

Sensor	**7ME6310-3TC11-1AA1**
Pipe size	DN 100
Liner	Soft rubber
Electrodes	SS 316
Flanges	EN 1092-1, PN 16
Transmitter	**7ME6920-1AA10-0AA0**
Accuracy	± 0.2 % ± 1 mm/s
Supply	230 V AC
Wall mounting kit	**FDK:085U1018**
Cable kit with sensor cable and electrode cable	**A5E01181647**

© Siemens 2021

3

Technical specifications

Flowmeter Calibration and traceability

To ensure continuous accurate measurement, flowmeters must be calibrated. The calibration is conducted at Siemens facilities with traceable instruments referring directly to the physical unit of measurement according to the International System of Units (SI).

Therefore, the calibration certificate ensures recognition of the test results worldwide, including the US (NIST traceability).

Siemens offers accredited calibrations assured to ISO 17025 in the flow range from 0.0001 m^3/h to 10 000 m^3/h.

The calibration follows the ISO 4185 performing calibrations under two methods: Static Weighing and Reference meter. Providing a measurement uncertainty of ±0.1 %.

Siemens accredited laboratories are recognized by ILAC MRA (International Laboratory Accreditation Corporation - Mutual Recognition Arrangement) ensuring international traceability and recognition of the test results worldwide.

A calibration certificate is shipped with every sensor and calibration data are stored in the SENSORPROM memory unit.

Flowmeter uncertainty

MAG 5000 with MAG 1100, MAG 1100 F, MAG 5100 W, MAG 3100, MAG 3100 P
and MAG 6000 with MAG 1100 (PFA), MAG 1100 F (PFA)
Flowmeter uncertainty

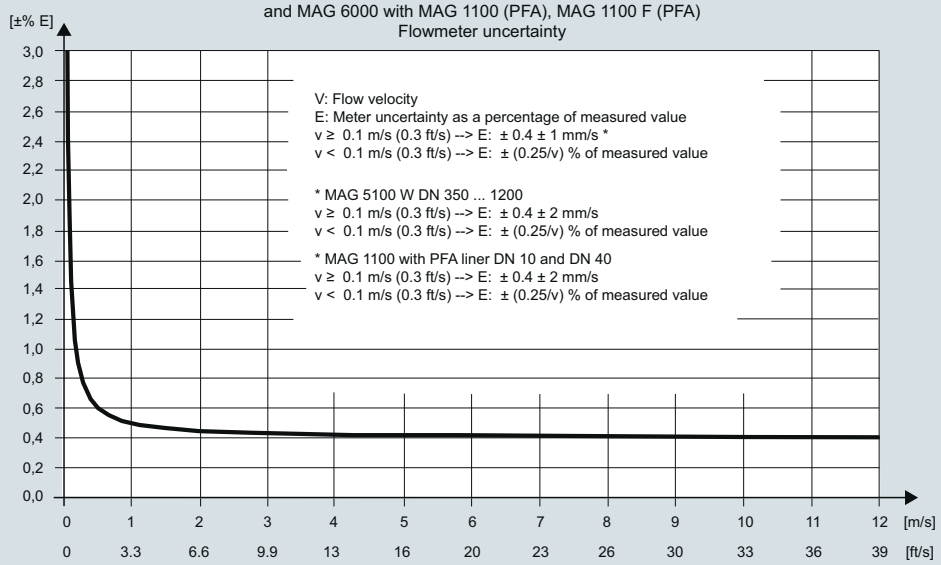

MAG 6000 and MAG 6000 I with MAG 1100 (not PFA), MAG 1100 F (not PFA), MAG 5100 W, MAG 3100 and MAG 3100 P
Flowmeter uncertainty

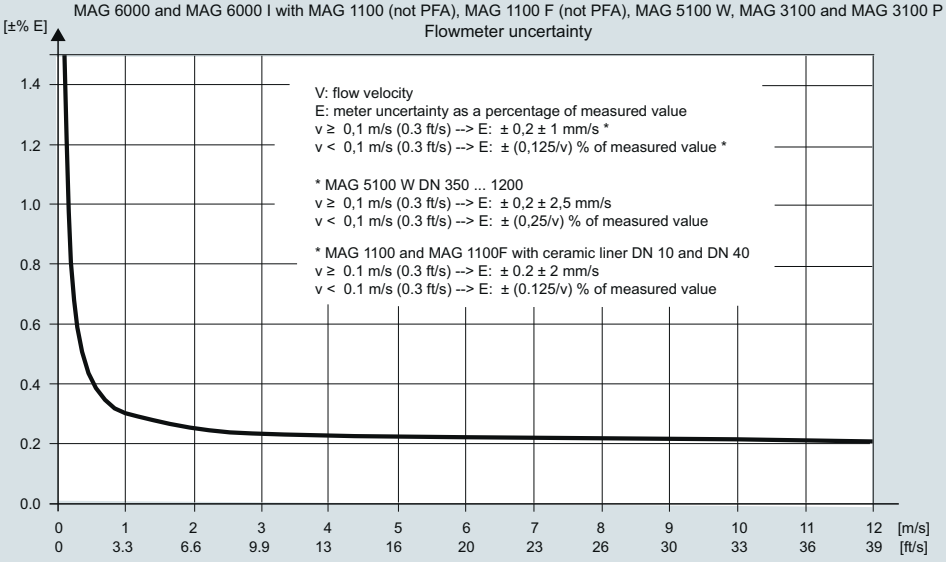

© Siemens 2021

Technical specifications (continued)

Calibration reference conditions

Reference conditions (ISO 9104 and DIN EN 29104)	
Temperature medium	20 °C ± 10 K (68 °F ± 18 °F)
Temperature ambient	25 °C ± 10 K (77 °F ± 18 °F)
Supply voltage	U_n ± 1 %
Warming-up time	30 minutes
Incorporation in conductive pipe section	
• Inlet section	10 x DN (DN ≤ 1200/48")
	5 x DN (DN > 1200/48")
• Outlet section	5 x DN (DN ≤ 1200/48")
	3 x DN (DN > 1200/48")
Flow conditions	Developed flow profile
Additions in the event of deviations from reference conditions	
Current output	As pulse output (± 0,1 % of actual flow +0,05 % FSO)
Effect of ambient temperature	
• Display frequency/pulse output	< ± 0,003 %/K act.
• Current output	< ± 0,005 %/K act.
Effect of supply voltage	< 0,005 % of measuring value on 1 % change
Repeatability	± 0,1 % of actual flow for v ≥ 0,5 m/s (1.5 ft/s) and conductivity > 10 µS/cm
Certificates	
• EN 10204-2.1	Certificate of conformity, stating that the delivered parts are made of the material quality that was ordered. Available as Z option C15.
• EN 10204-2.2	Test report certificate, a non batch specific material analysis of the ordered material. Available as Z option C14.
• EN 10204-3.1	Material analysis certificate, a batch specific analysis of the material issued by an independent inspector. Certification covers all pressure containing and wetted parts. Available as Z option C12.

Calibration test point

Test points for default calibration at 25% and 90% of factory Q_{max}.

Size	Q_{max}	90%	25%
mm	m^3/h	m^3/h	m^3/h
2	0.055	0.0495	0.01375
3	0.127	0.1143	0.03175
6	0.5	0.45	0.125
10	1.4	1.26	0.35
15	3	2.7	0.75
25	9	8.1	2.25
40	23	20.7	5.75
50	35	31.5	8.75
65	60	54	15
80	90	81	22.5
100	140	126	35
125	220	198	55
150	320	288	80
200	550	495	137.5
250	900	810	225
300	1300	1170	325
350	1700	1530	425
400	2250	2025	562.5
450	2800	2520	700
500	2800	2520	700
600	2800	2520	700
700	6000	5400	1500
750	6000	5400	1500
800	6000	5400	1500
900	6000	5400	1500
1000	6000	5400	1500
1050	6000	5400	1500
1100	6000	5400	1500
1200	6000	5400	1500
1400	7000	6300	1750
1500	7000	6300	1750
1600	7000	6300	1750
1800	7000	6300	1750
2000	7000	6300	1750

© Siemens 2021

Technical specifications (continued)

Technical specifications PROFIBUS PA/DP

General specifications	
PROFIBUS device profile	3.00 Class B
Certified	No
MS0 connections	1
MS1 connections	1
MS2 connections	2

Electrical specification DP

Physical layer specifications	
Applicable standard	IEC 61158/EN 50170
Physical Layer (Transmission technology)	RS 485
Transmission speed	≤ 1.5 Mbits/s
Number of stations	Up to 32 per line segment, (maximum total of 126)
Cable specification (Type A)	
Cable design	Two-wire twisted pair
Shielding	CU shielding braid or shielding braid and shielding foil
Impedance	35 up to 165 Ω at frequencies from 3 … 20 MHz
Cable capacity	< 30 pF per meter
Core diameter	> 0,34 mm^2, corresponds to AWG 22
Resistance	< 110 Ω per km
Signal attenuation	Max. 9 dB over total length of line section
Max. bus length	200 m at 1500 kbit/s, up to 1.2 km at 93.75 kbit/s. Extendable by repeaters

Electrical specification PA

Physical layer specifications	
Applicable standard	IEC 61158/EN 50170
Physical Layer (Transmission technology)	IEC-61158-2
Transmission speed	31.25 Kbits/second
Number of stations	Up to 32 per line segment, (maximum total of 126)
Max. basic current [I_B]	14 mA
Fault current [I_{FDE}]	0 mA
Bus voltage	9 … 32 V (non Ex)
Preferred cable specification (Type A)	
Cable design	Two wire twisted pair
Conductor area (nominal)	0,8 mm^2 (AWG 18)
Loop resistance	44 Ω/km
Impedance	100 Ω ± 20 %
Wave attenuation at 39 kHz	3 dB/km
Capacitive asymmetry	2 nF/km
Bus termination	Passive line termination at both
Max. bus length	Up to 1,9 km. Extendable by repeaters

IS (Intrinsic Safety) data	
Required sensor electronics	Compact or remote mounted SITRANS FM MAG 6000 I Ex
FISCO	YES
Max. U_I	17,5 V
Max. I_I	380 mA
Max. P_I	5,32 V
Max. L_I	0 µH
Max. C_I	0 nF
FISCO cable requirements	
Loop resistance R_C	15 … 150 Ω/km
Loop inductance L_C	0,4 … 1 mH/km
Capacitance C_C	80 … 200 nF/km
Max. Spur length in IIC and IIB	30 m
Max. Trunk length in IIC	1 km
Max. Trunk length in IIB	5 km

PROFIBUS parameter support

The following parameters are accessible using a MS0 relationship from a Class 1 Master.
MS0 specifies cyclic Data Exchange between a Master and a Slave.

Cyclic services		
Input (Master view)	**Parameter**	**MAG 6000/MAG 6000 I**
	Mass flow	
	Volume flow	✓
	Temperature	
	Density	
	Fraction A	
	Fraction B	
	Pct Fraction A	
	Totalizer 1	✓
	Totalizer 2[1)]	✓
	Batch progress[1)]	✓
	Batch setpoint	✓
	Batch compensation	✓
	Batch status (running …)	✓
Output (Master view)	Set Totalizer 1+2	✓
	Set Mode Totalizer 1+2	✓
	Batch control (start, stop …)	✓
	Batch setpoint	✓
	Batch compensation	✓

[1)] Value returned is dependent on the BATCH function.
When ON, Batch progress is returned.
When OFF, TOTALIZER 2 is returned.

© Siemens 2021

Technical specifications (continued)

Flow and speed chart

Metric

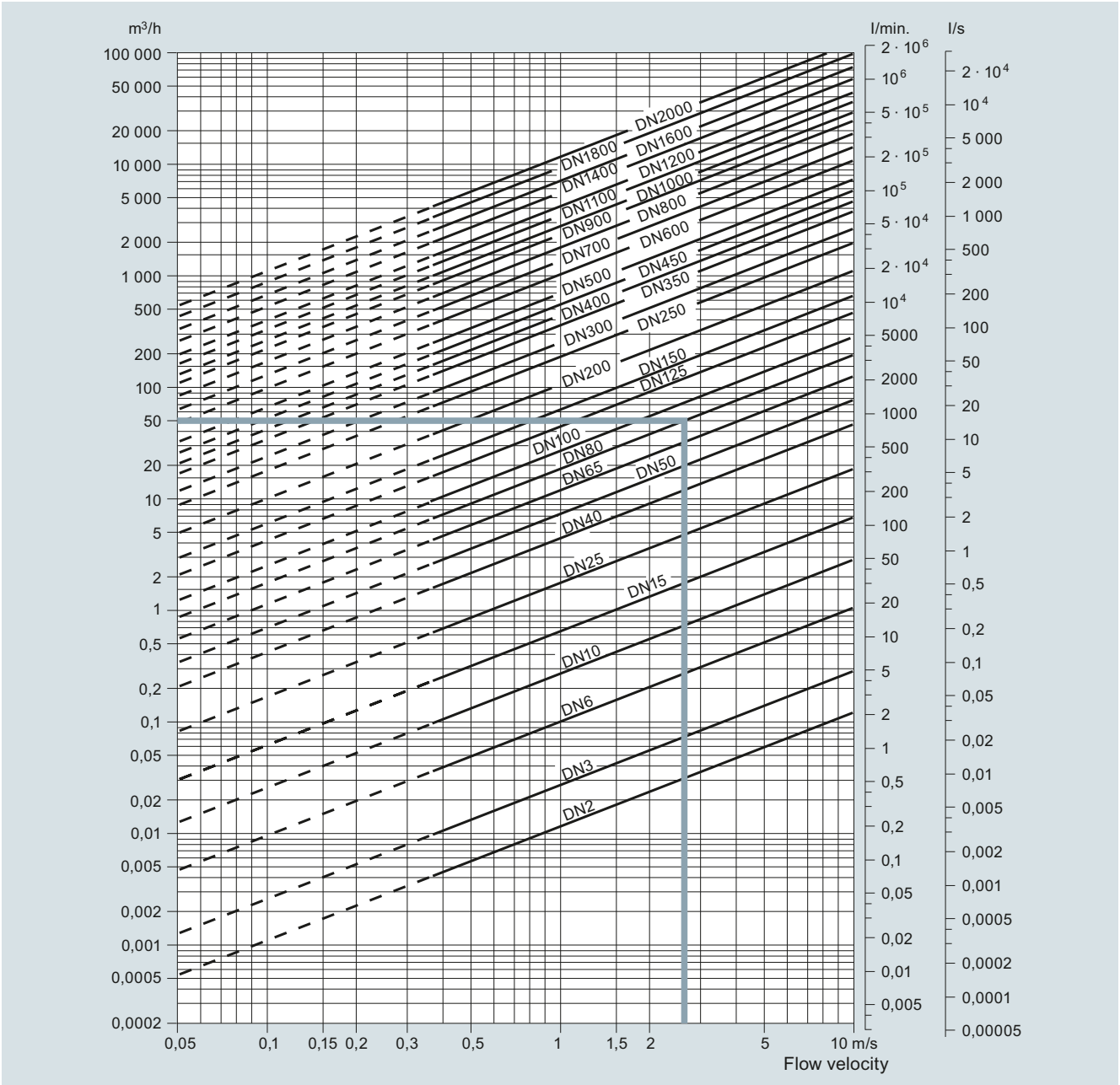

Sizing table (DN 2 … DN 2000)

The table shows the relationship between flow velocity v, flow quantity Q and sensor dimension DN.

Guidelines for selection of sensor

Min. measuring range: 0 … 0.25 m/s

Max. measuring range: 0 … 10 m/s

Normally the sensor size is selected so that nominal flow velocity v lies within the measuring range 1 to 3 m/s.

Example:

Flow quantity of 50 m^3/h and a sensor dimension of DN 80 gives a flow velocity of 2.7 m/s, which is within the recommended measuring range of 1 to 3 m/s.

Flow velocity calculation formula	Units
$v = 1273.24 \cdot Q/DN^2$ or	v: [m/s], Q: [l/s], DN: [mm]
$v = 353.68 \cdot Q/DN^2$	v: [m/s], Q: [m^3/h], DN: [mm]

For more information visit:
https://new.siemens.com/global/en/products/automation/process-instrumentation/flow-measurement/electromagnetic.html

© Siemens 2021

3

Technical specifications (continued)

Imperial

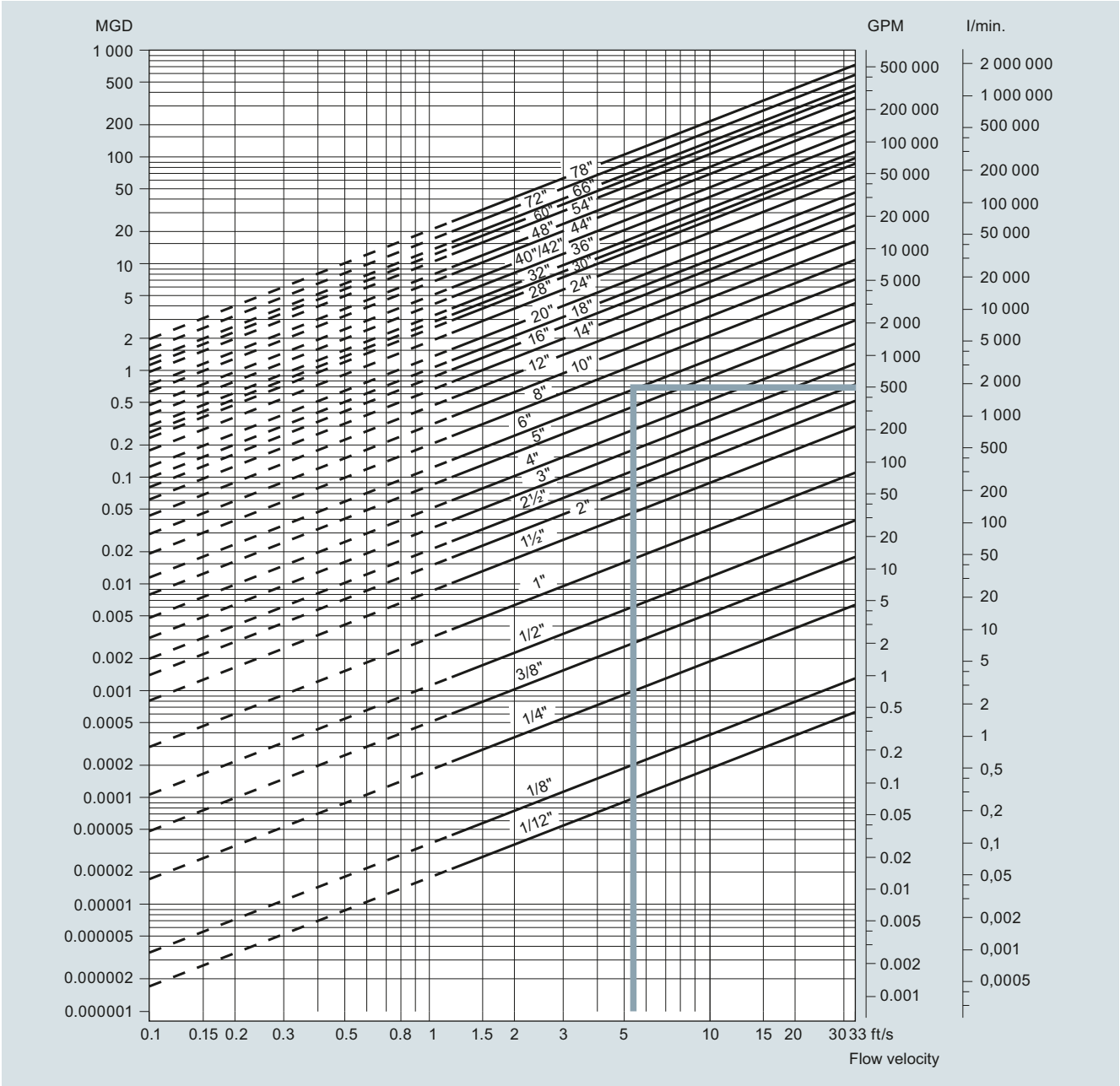

Sizing table (1/12" … 78")

The table shows the relationship between flow velocity v, flow quantity Q and sensor dimension size.

Guidelines for selection of sensor

Min. measuring range: 0 … 0.8 ft/s

Max. measuring range: 0 … 33 ft/s

Normally the sensor size is selected so that nominal flow velocity v lies within the measuring range 3 to 10 ft/s.

Example:

Flow quantity of 500 GPM and a sensor dimension of 6" gives a flow velocity of 5.6 ft/s, which is within the recommended measuring range of 3 to 10 ft/s.

Flow velocity calculation formula	Units
$v = 0.408 \cdot Q/(\text{Pipe I.D.})^2$ or	v: [ft/s], Q: [GPM], Pipe I.D.: [inch]
$v = 283.67 \cdot Q/(\text{Pipe I.D.})^2$	v: [ft/s], Q: [MGD], Pipe I.D.: [inch]

For more information visit:
https://new.siemens.com/global/en/products/automation/process-instrumentation/flow-measurement/electromagnetic.html

© Siemens 2021

Technical specifications (continued)

Installation conditions

Vibrations

Strong vibrations should be avoided.

In applications with strong vibrations, remote mounting of the transmitter is recommended.

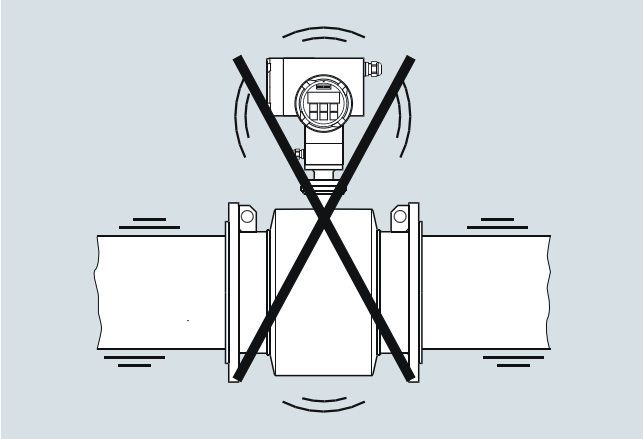

The sensor must always be completely filled with liquid.

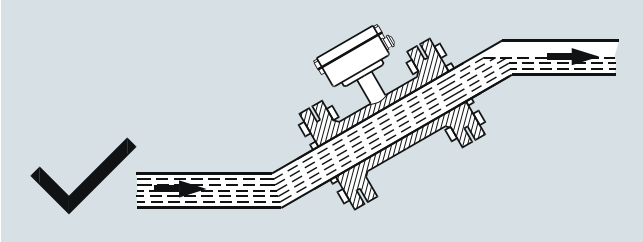

Install in pipelines which are always full

The sensor must always be completely filled with liquid. Therefore avoid:

- Installation at the highest point in the pipe system
- Installation in vertical pipes with free outlet

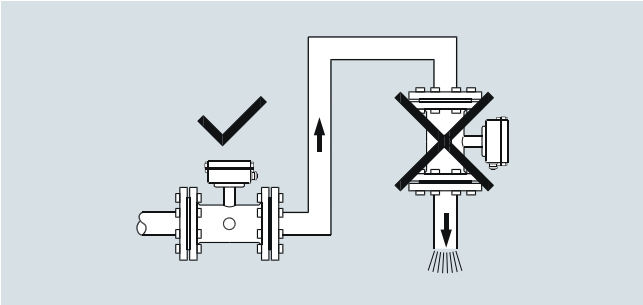

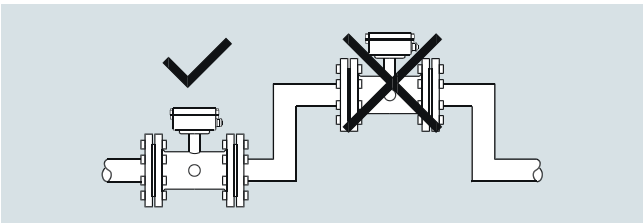

Do not install in pipelines which can run empty

For partially filled pipes or pipes with downward flow and free outlet the flowmeter should be located in a U-Tube.

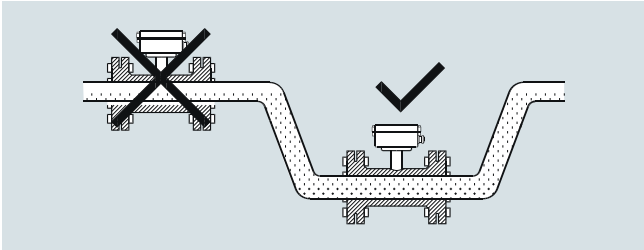

Install in U-tubes when pipe is partially filled

Installation in vertical pipes

Recommended flow direction: upwards. This minimizes the effect on the measurement of any gas/air bubbles in the liquid.

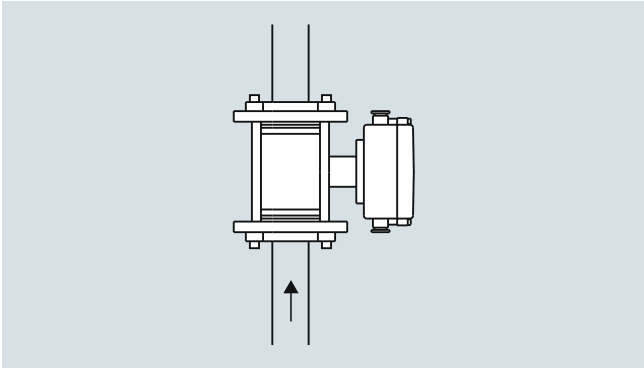

Install in vertical pipes with upward flow direction

Installation in horizontal pipes

The sensor must be mounted as shown in the below figure. Do not mount the sensor as shown in the lower figure. This will position the electrodes at the top where there is possibility for air bubbles and at the bottom where there is possibility for mud, sludge, sand etc.

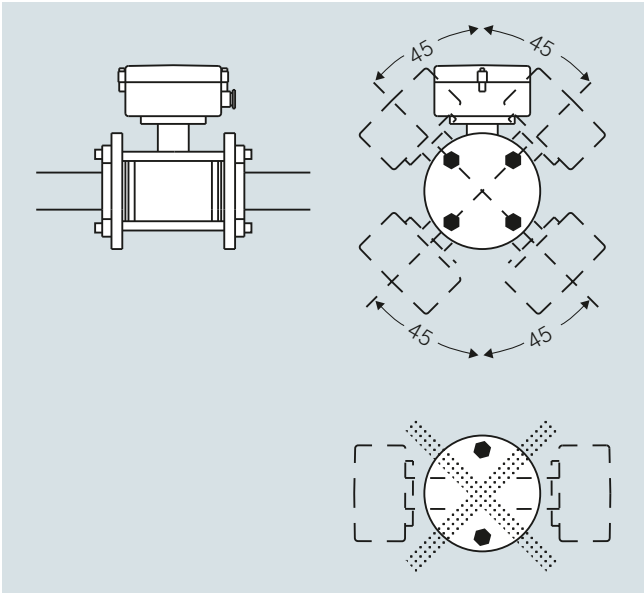

© Siemens 2021

3

Technical specifications (continued)

Measuring abrasive liquids and liquids containing particles

Recommended installation is in a vertical/inclined pipe to minimize the wear and deposits in the sensor.

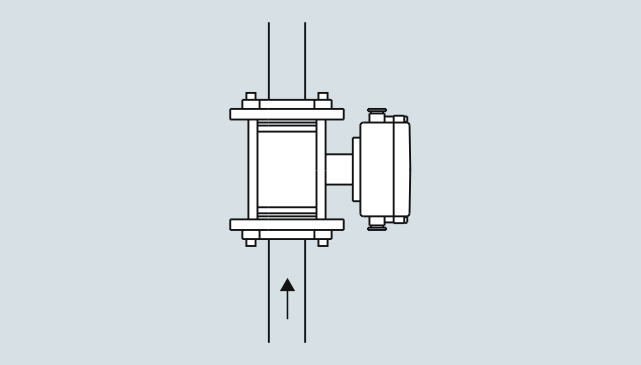

Install in vertical pipelines with upward flow direction if measuring abrasive liquids

Inlet and outlet conditions

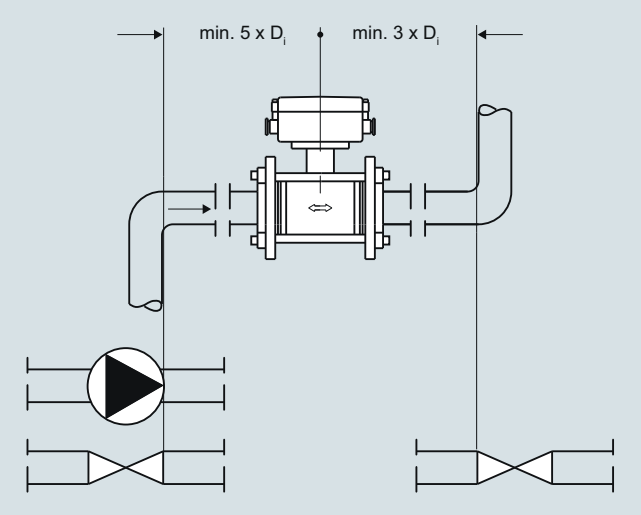

Recommended straight pipe lengths up and downstream for installations between elbows, pumps and valves

To achieve maximum accurate flow measurement it is essential to have straight pipe lengths up and downstream. Practical experience has proved that the MAG 5100 W and MAG 8000 are capable to operate in non-optimal piping arrangements and still provide acceptable accuracy even with zero diameters upstream and downstream of straight run pipe.

It is also important to center the flowmeter in relation to pipe flange and gaskets.

Ambient temperature-Installation

Temperature changes can cause expansion or contraction in the pipe system. To avoid damage on the sensor use of proper gasket and torque should be ensured. For more information see sensor instruction.

Potential equalization

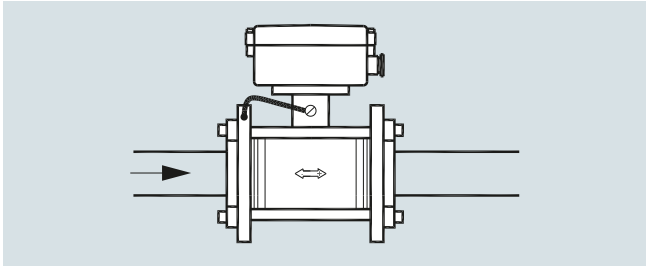

Potential equalization

The electrical potential of the liquid must always be equal to the electrical potential of the sensor. This can be achieved in different ways depending on the application:

- Wire jumper between sensor and adjacent flange (MAG 1100, MAG 3100)
- Direct metallic contact between sensor and fittings (MAG 1100 F)
- Built-in grounding electrodes (MAG 3100, MAG 5100 W)
- Optional grounding/protection flanges/rings (MAG 1100, MAG 3100, MAG 8000)
- Optional graphite gaskets on MAG 1100 (standard for MAG 1100 High Temperature)
- MAG 8000 installed in plastic or coated pipes: two grounding rings to be used.

Grounding

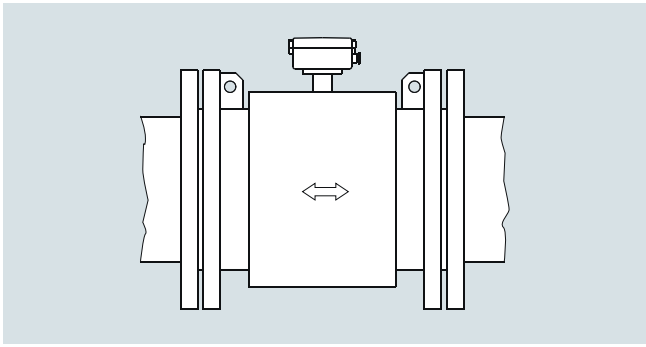

MAG 3100 and MAG 5100 W: with grounding electrodes in conductive and non-conductive pipes (no further action necessary)

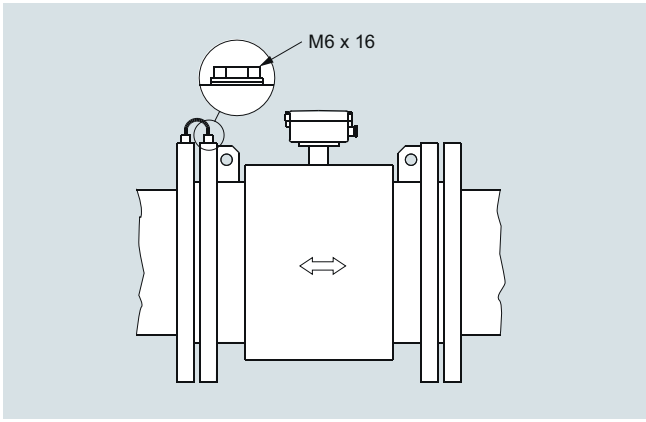

MAG 1100 and MAG 3100; without grounding electrodes in conductive pipes (MAG 1100 use graphite gasket)

© Siemens 2021

Technical specifications (continued)

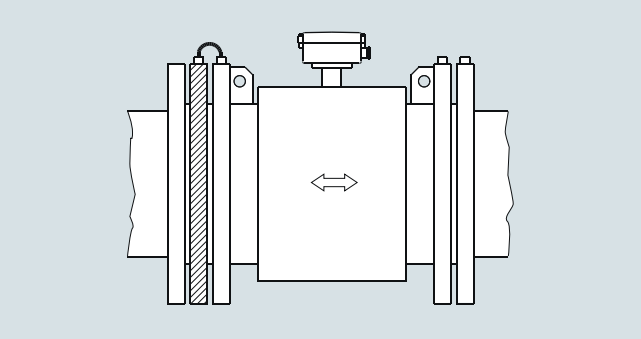

Without grounding electrodes in non-conductive pipes use grounding ring(MAG 1100 use graphite gasket)

MAG 1100 F grounding via process connections. MAG 8000 grounding see the section about MAG 8000.

Vacuum

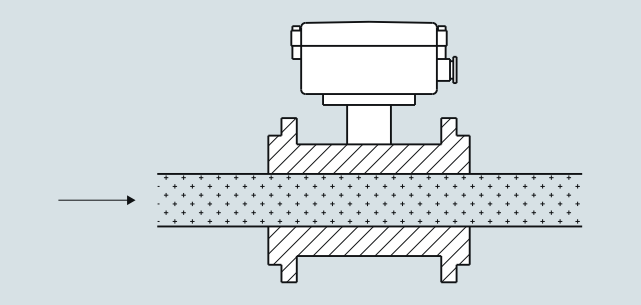

In order to prevent damages of liner when operating meters under vacuum please take note of the information "Operating pressure" given in section "Technical specification".

Installation in large pipes

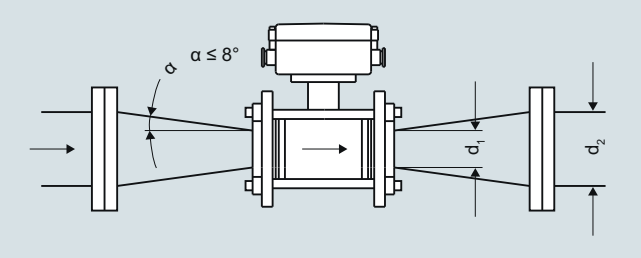

Reduction in nominal pipe diameter

The flowmeter can be installed between two reducers (e.g. DIN 28545). Assuming that at 8° the following pressure drop curve applies. The curves are applicable to water.

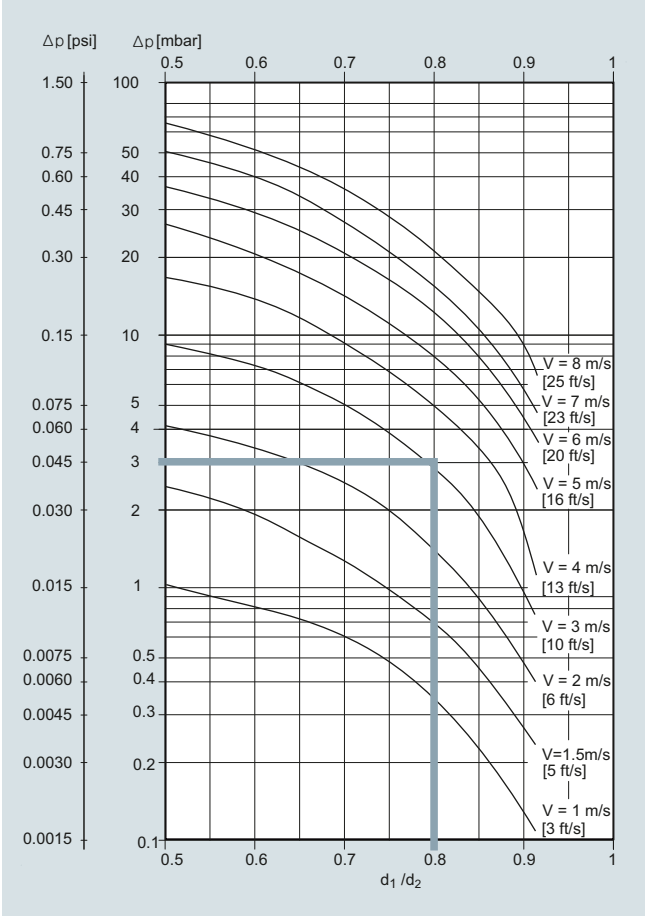

Pressure drop as function of diameter reduction between reducers

Example:

Flow velocity (v) of 3 m/s (10 ft/s) in a sensor with a diameter reduction DN 100 (4") to DN 80 (3") (d_1/d_2 = 0.8) gives a pressure drop of 2.9 mbar (0.04 psi).

Ambient temperature

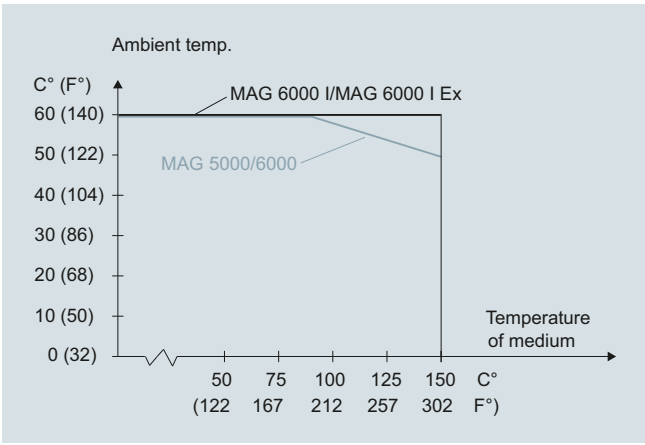

Max. ambient temperature as a function of temperature of medium

The transmitter can be installed either compact or remote.

With compact installation the temperature of medium must be according to the graph.

© Siemens 2021

3

Technical specifications (continued)

Sensor cables and conductivity of medium

Compact installation:

Liquids with an electrical conductivity ≥ 5 µS/cm.

Note for MAG 1100 sizes DN 2 and DN 3:

- The media conductivity must be ≥ 30 uS/cm

Note for MAG 8000:

- The media conductivity must be ≥ 20 uS/cm

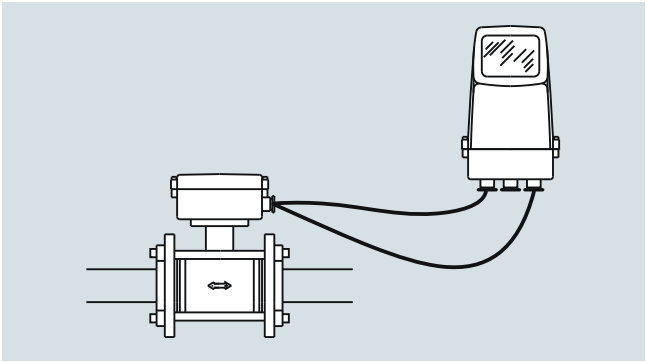

Remote installation

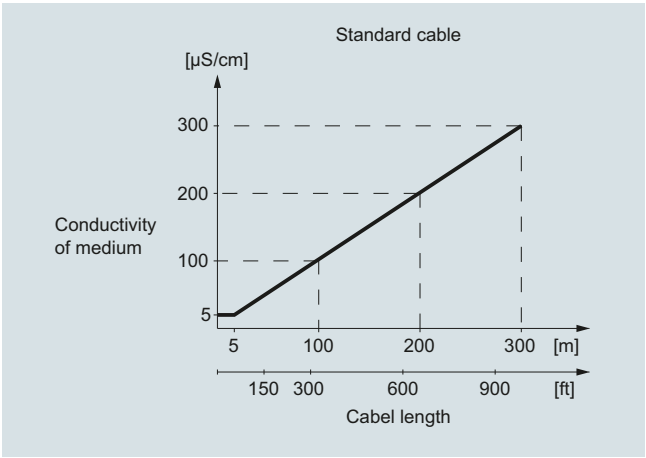

Minimum conductivity of medium (using standard electrode cable)

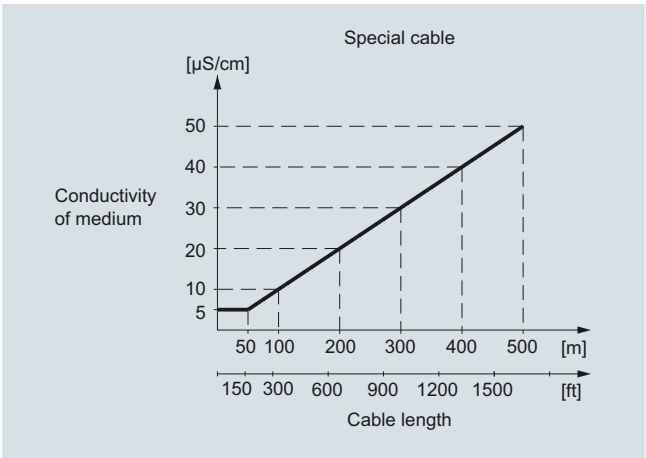

Minimum conductivity of medium (using special electrode cable)

Empty pipe detection

The installation has to fulfill the following limitations for usage of the empty pipe detection function:

- Media conductivity ≥ 20 µS/cm
- Length of cable at remote installation ≤ 50 m (150 ft)
- Special shield cable must be used

Note for MAG 1100 sizes DN 2 and DN 3:

- Empty pipe detection is not available

Note for MAG 5000/6000 CT:

- Empty pipe detection is not available

© Siemens 2021

Function

All electromagnetic flowmeters are based on Faraday's law of induction:

$U_M = B \cdot v \cdot d \cdot k$

U_M = Measured voltage induced in the medium perpendicular to the magnetic field and the flow direction. The voltage is tapped at two point electrodes.

B = Magnetic flux density which permeates the flowing medium perpendicular to the flow direction.

v = flow velocity of medium

d = internal diameter of metering tube

k = proportionality factor or sensor constant

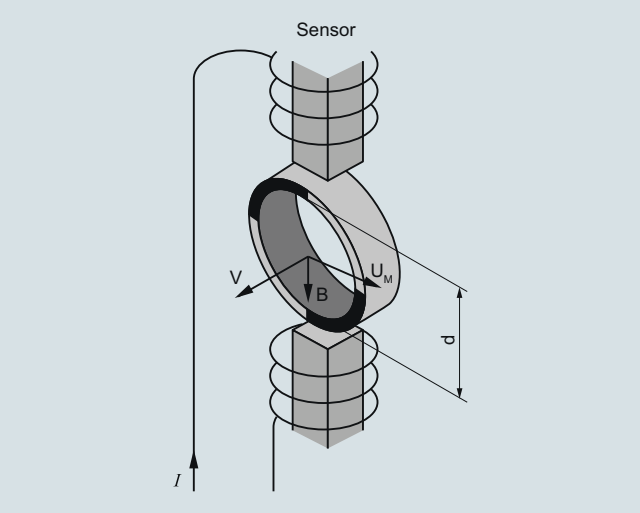

Function and measuring principle of electromagnetic measurement

An electromagnetic flowmeter generally consists of a magnetically non-conducting metering tube with an internal electrically non-conducting surface, magnet coils connected in series and mounted diametrically on the tube, and at least two electrodes which are inserted through the pipe wall and are in contact with the measured medium. The magnet field coils through which the current passes generate a pulsed electromagnetic field with the magnetic flux density B perpendicular to the pipe axis.

This magnetic field penetrates the magnetically non-conducting metering tube and the medium flowing through it, which must have a minimum electrical conductivity.

According to Faraday's law of induction, a voltage U_M is generated in an electrically conducting medium, and is proportional to the flow velocity v of the medium, the magnetic flux density B, and the distance between the electrodes d (internal diameter of pipe).

The signal voltage U_M is tapped by the electrodes which are in contact with the medium, and passed through the insulating pipe wall. The signal voltage U_M which is proportional to the flow velocity is converted by an associated transmitter into appropriate standard signals such as 4 to 20 mA.

SITRANS FM diagnostics

The diagnostic functions are all internal tools in the meter:

- Identification in clear text and error log
- Error categories: function; warning; permanent and fatal errors
- Transmitter self-check including all outputs and the accuracy
- Sensor check: coil and electrode circuit test
- Overflow
- Empty pipe: partial filling; low conductivity; electrode fouling

SITRANS FM Verificator (MAG 5000 and 6000)

The SITRANS FM Verificator is an external tool designed for MAG 5000 and MAG 6000 with MAG 1100, MAG 1100 F, MAG 3100, MAG 3100 P or MAG 5100 W sensors to verify the entire product, the installation and the application.

The goal is to improve operation, reduce downtime and maintain measurement accuracy as long as possible.

The SITRANS FM Verificator is highly advanced and carries out the complex verification and performance check of the entire flowmeter system, according to unique SIEMENS patented principles. The whole verification test is automated and easy to operate so there is no opportunity for human error or influence. The system is traceable to international standards and tested by WRc (Water Research Council).



SITRANS FM Verificator

- Stand alone Verificator to measure a number of selected parameters in the flow sensor and a transmitter which affects the integrity of the flow measurement.
- Up to 20 measurements can be stored in the Verificator.
- The Verificator can be connected via a serial cable to a PC enabling download of the data. A Windows program enables printing and management of verificator reports.

Verification - Steps

Verification of a SITRANS FM flowmeter consists of the following test routines:

1. Transmitter test
2. Flowmeter and cable insulation test
3. Sensor magnetism test

© Siemens 2021

3

Function (continued)

1. Transmitter test

The transmitter test is the traditional way of on-site testing on the market and checks the complete electronic system from signal input to output.

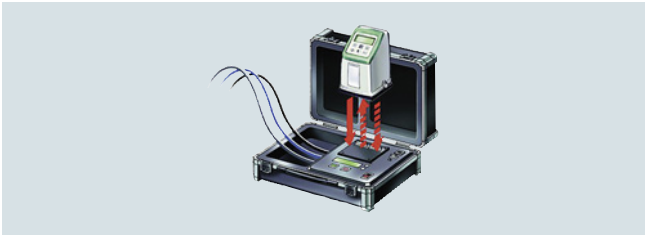

Transmitter test

Using the excitation power output, which is generated to drive the magnetic field of the sensor, the verificator simulates flow signal to the transmitter input. By measuring the transmitter outputs the verificator calculates its accuracy against defined values. Test includes:

- Excitation power to drive the magnetic field
- Signal function from signal input to output
- Signal processing – gain, offset and linearity
- Test of analogue and frequency output

2. Insulation test

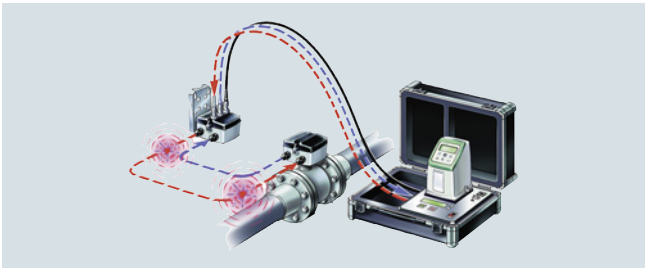

Flowmeter insulation test

The verification test of the flowmeter insulation is a “cross-talk” test of the entire flowmeter which ensures that the flow signal generated in the sensor is not affected by any external influences.

In the “cross-talk” test the verificator generates a high voltage disturbance within the coil circuit and then looks for any “cross-talk” induced in the flow signal circuit. By generating dynamic disturbances close-coupled to the flow signal, the flowmeter is tested for noise immunity to a maximum level:

- EMC influence on the flow signal
- Moisture in sensor, connection and terminal box
- Non-conductive deposit coating the electrodes within the sensor
- Missing or poor grounding, shielding and cable connection

3. Sensor magnetism test

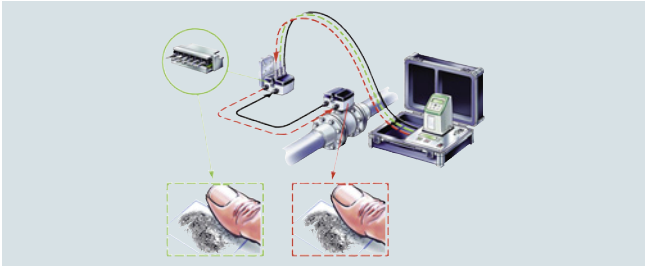

Sensor magnetism test

The verification of the sensor magnetism is a “boost” test of the magnetic field coil. The test ensures that the magnetism behaviour is like the first time, by comparing the current sensor magnetism with the “fingerprint” which was determined during initial calibration and stored in the SENSORPROM memory unit.

In the “boost” test the verificator changes the magnetic field in certain pattern and with high voltage to get quick stable magnetic condition. This unique test is fulfilled without any interference or compensation of surrounding temperature or interconnecting cabling.

- Changes in dynamic magnetic behaviour
- Magnetic influence inside and outside the sensor
- Missing or poor coil wire and cable connection

Certificate

The test certificate generated by a PC contains:

- Test result with passed or failed
- Installation specification
- Flowmeter specification and configuration
- Verificator specification with date of calibration ensuring traceability to international standards.

MAGFLO® Verification Certificate

Customer:
Name
Address
Phone
Email

MAGFLO® Identification:

TAG No./Name	0
Sensor Code No.	7ME634
Sensor Serial No.	057701H142
Transmitter Code No.	7ME692
Transmitter Serial No.	109418N080
Location	

Results:

Verification file name or No.		FT-103FT2801
Transmitter		Passed
Sensor	Insulation	Passed
	Magnetic Circuit	Passed

Velocity	Current Output			Frequency Output		
Theoretical	Theoretical	Actual	Deviation	Theoretical	Actual	Deviation
0.5m/s	4.800mA	4.802mA	0.25%	0.500kHz	0.501kHz	0.11%
1.0m/s	5.600mA	5.601mA	0.08%	1.000kHz	1.001kHz	0.07%
3.0m/s	8.800mA	8.804mA	0.08%	3.000kHz	3.004kHz	0.14%
	Current Output 4-20mA			Frequency Output 0-10kHz		

Transmitter Settings:

Basic	Qmax.	2.00000 m³/h
	Flow Direction	Positive
	Low flow Cut-off	1.50%
	Empty Pipe	ON
Output	Current Output	ON (4-20mA)
	Time Constant	5.0 Sec.
	Relay Output	Error Level
	Digital Output	Pulse
	Frequency Range	N/A
	Time Constant	N/A
	Volume/pulse	1.0 l/p
	Pulse width	0.51999998 sec.
	Pulse polarity	Positiv
Totalizer 1 value before test		819442.93213 l
Totalizer 1 value after test		819458.92334 l
Totalizer 2 value before test		693.87579 l
Totalizer 2 value after test		693.88145 l
Operating time in days		1068

Sensor Details:

Size	DN 15 1/2 IN
Cal. Factor	0.16531426
Correction Factor	1.0
Excitation Freq.	12.5Hz

Verificator Details (083F5060)

Serial No.	107920N490
Device No.	94683
Software Version	1.40
PC-Software Version	5.01
Cal. date	2015.10.26
ReCal. date	2016.10.26

Comments

These tests verify that the flowmeter is functioning within 2% deviation of the original test parameters.
Verification is traceable to National and International Standards.

Date and signature
2016.10.26

Description	Article No.
SITRANS FM Verificator	
11 … 30 V DC, 11 … 24 V AC, 115 … 230 V, 50 Hz	**FDK:083F5060**
11 … 30 V DC, 11 … 24 V AC, 115 … 230 V, 60 Hz	**FDK:083F5061**

Note:
It is mandatory to have the Verificator returned to the factory once a year for check and re-verification.

© Siemens 2021

Overview



Transmitter MAG 5000/6000 compact version (left) and 19“ insert version (right)

The MAG 5000 and 6000 are transmitters engineered for high performance, easy installation, commissioning and maintenance. The transmitters evaluate the signals from the SITRANS FM sensors type MAG 1100, MAG 1100 F, MAG 3100, MAG 3100 P and MAG 5100 W.

Transmitter types:

- MAG 5000: Max. measuring error ± 0.4 % ± 1 mm/s (incl. sensor)
- MAG 6000: Max. measuring error ± 0.2 % ± 1 mm/s (incl. sensor, see also sensor specifications) and with additional features such as: “plug & play” add-on bus modules; integrated batch functions.

Benefits

- Superior signal resolution for optimum turn down ratio
- Digital signal processing with many possibilities
- Automatic reading of SENSORPROM data for easy commissioning
- User configurable operation menu with password protection
- 3 lines, 20 characters display in 11 languages
- Flow rate in various units
- Totalizer for forward, reverse and net flow as well as additional information available
- Multiple functional outputs for process control, minimum configuration with analogue, pulse/frequency and relay output (status, flow direction, limits)
- Comprehensive self-diagnostic for error indication and error logging (see SITRANS FM diagnostics)
- Batch control (MAG 6000 only)
- Custody transfer approval: MI-001 for cold water, PTB K 7.2 and OE12/C 040 for chilled water
- MAG 6000 with add-on bus modules for HART, FOUNDATION Fieldbus H1, DeviceNet, Modbus RTU/RS485, PROFIBUS PA and DP

Application

The SITRANS FM flowmeters are suitable for measuring the flow of almost all electrically conductive liquids, pastes and slurries. The main applications can be found in:

- Water and waste water
- Chemical and pharmaceutical industries
- Food and beverage industries
- Power generation and utility

Design

The transmitter is designed as either IP67 NEMA 4X/6 enclosure for compact or wall mounting or 19" version as a 19" insert as a base to be used in:

- 19" rack systems
- Front panel mounting IP65/NEMA 2
- Panel mounting IP20/NEMA 1
- Wall mounting IP66/NEMA 4X

Several options on 19" versions are available such as:

- Transmitters mounted in safe area for Ex ATEX approved flow sensors (incl. barriers)
- Transmitters with electrode cleaning unit on request

© Siemens 2021

Function

The MAG 5000/6000 are transmitters with a built-in alphanumeric display in several languages. The transmitters evaluate the signals from the associated electromagnetic sensors and also fulfil the task of a power supply unit which provides the magnet coils with a constant current.

Further information on connection, mode of operation and installation can be found in the data sheets for the sensors.

Displays and controls

Operation of the transmitter can be carried out using:

- Control and display unit
- HART communicator
- PC/laptop and SIMATIC PDM software via HART communication
- PC/laptop and SIMATIC PDM software using PROFIBUS or Modbus communication

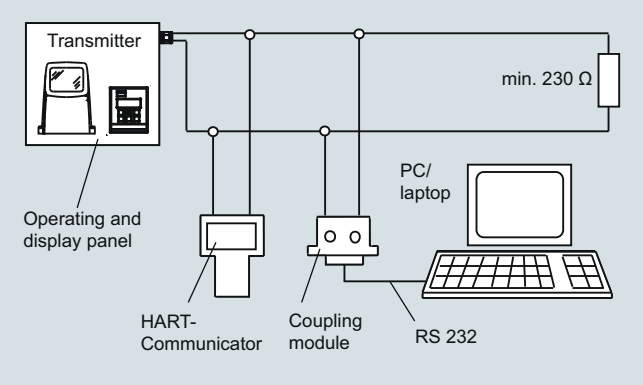

HART communication

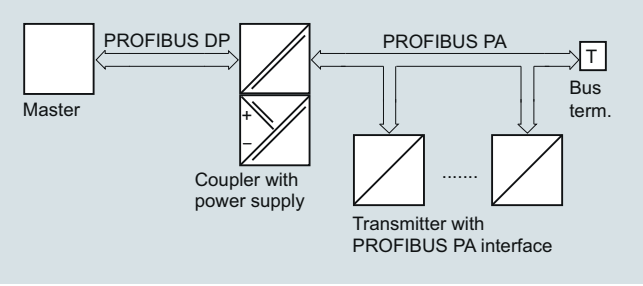

PROFIBUS PA communication

© Siemens 2021

Technical specifications

Mode of operation and design	
Measuring principle	Electromagnetic with pulsed constant field
Empty pipe	Detection of empty pipe (special cable required in remote mounted installation)
Excitation frequency	Depend on sensor size
Electrode input impedance	> 1 x 10^{14} Ω
Input	
Digital input	11 ... 30 V DC, R_i = 4. 4 KΩ
• Activation time	50 ms
• Current	$I_{11\ V\ DC}$ = 2.5 mA, $I_{30\ V\ DC}$ = 7 mA
Output	
Current output	
• Signal range	0 ... 20 mA or 4 ... 20 mA
• Load	< 800 Ω
• Time constant	0.1 … 30 s, adjustable
Digital output	
• Frequency	0 ... 10 kHz, 50 % duty cycle (uni/bidirectional)
• Pulse (active)	24 V DC, 30 mA, 1 kΩ ≤ R_i ≤ 10 kΩ, short-circuit-protected (power supplied from flowmeter)
• Pulse (passive)	3 … 30 V DC, max. 110 mA, 200 Ω ≤ R_i ≤ 10 kΩ powered from connected equipment)
• Time constant	0.1 … 30 s, adjustable
Relay output	
• Time constant	Changeover relay, same as current output
• Load	42 V AC/2 A, 24 V DC/1 A
Low flow cut off	0 ... 9.9 % of maximum flow
Galvanic isolation	All inputs and outputs are galvanically isolated
Max. measuring error (incl. sensor and zero point) (for detailed accuracy specifications see "System information")	
• MAG 5000	± 0.4 % ± 1 mm/s
• MAG 6000	± 0.2 % ± 1 mm/s
Rated operation conditions	
Ambient temperature	
• Operation	• Display version: -20 ... +60 C (-4 ... +140 F) • Blind version: -20 ... +60 C (-4 ... +140 F) • Custody transfer (CT) version -20 ... +50 °C (-4 ... +122 °F)
• Storage	-40 ... +70 C (-40 ... +158 F°)
Mechanical load (vibration)	
Compact version	18 ... 1000 Hz, 3.17 g RMS, sinusoidal in all directions to IEC 68-2-36
19“ insert	1 ... 800 Hz, 1 G, sinusoidal in all directions to IEC 68-2-36
Degree of protection	
Compact version	IP67/NEMA 4X/6 to IEC 529 and DIN 40050 (1 mH_2O 30 min.)
19“ insert	IP20/NEMA 1 to IEC 529 and DIN 40050
EMC performance	IEC/EN 61326-1 (all environments) IEC/EN 61326-2-5
Display and keypad	
Totalizer	Two eight-digit counters for forward, net or reverse flow
Display	Background illumination with alpha-numeric text, 3 x 20 characters to indicate flow rate, totalized values, settings and faults; Reverse flow indicated by negative sign
Time constant	Time constant as current output time constant
Design	
Enclosure material	
• Compact version	Fiber glass reinforced polyamide; stainless steel AISI 316/1.4436 (IP65)
• 19“-insert	Standard 19“ insert of aluminium/steel (DIN 41494), width: 21 TE, height: 3 HE
• Back of panel	IP20/NEMA 1; Aluminium
• Panel mounting	IP20/NEMA 1 (prepared for IP65/NEMA 2 display side); ABS plastic
• Wall mounting	IP66/NEMA 4X; ABS plastic
Dimensions	
• Compact version	See dimensional drawings
• 19“ insert	See dimensional drawings
Weight	
• Compact version	0.75 kg (2 lbs)
• 19“ insert	See dimensional drawings
Power supply	• 115 ... 230 V AC +10 % -15 %, 50 ... 60 Hz • 11 ... 30 V DC or 11 ... 24 V AC
Power consumption	• 230 V AC: 17 VA • 24 V AC: 9 VA, I_N = 380 mA, I_{ST} = 8 A (30 ms) • 12 V DC: 11 W, I_N = 920 mA, I_{ST} = 4 A (250 ms) • 24 V DC: 8.4 VA, I_N = 350 mA, I_{ST} = 4 A (10 ms) I_{ST}= 4 A (250 ms): For solar panel please securestable current supply
Certificates and approvals	
General purpose	• CE (LVD, EMC, PED, RoHS) • UL (c-UL-us)
Hazardous area	• FM, CSA - NI Class I Div. 2 Groups A, B, C, D
Custody transfer	• Cold water: MI-001 • Chilled water - PTB K 7.2 (Germany) - OE 12/C 040 (Austria)
Marine (only for remote version with MAG 5100 W, DN 50 ... DN 300)	• ABS • Bureau Veritas • DNV-GL • Lloyd's Register
Others	• CPA (China) • EAC (Russia, Belarus, Kazakhstan) • KCs (South Korea)
Communication	
Standard	
• MAG 5000	HART 5.2 optional
• MAG 6000	Optional as add-on modules: • HART 5.2 • Modbus RTU/RS 485, • FOUNDATION Fieldbus H1 • DeviceNet, • PROFIBUS PA • PROFIBUS DP

© Siemens 2021

Technical specifications (continued)

Safety barrier (e/ia)



Application	**For use with MAG 5000/6000 19" and MAG 1100 Ex/MAG 3100 Ex**		
Ex approval	MAG 1100 Ex [EEx e ia] IIB ATEX, EAC Ex		
	MAG 3100 Ex [EEx e ia] IIC ATEX, EAC Ex		
Cable parameter	Group	Capacity in µF	Inductance in mH
Electrode	IIC	≤ 4.1	≤ 80
	IIB	≤ 45	≤ 87
	IIA	≤ 45	≤ 87
Ambient temperature			
• During operation	-20 ... +50 °C (-4 ... +122 °F)		
• During storage	-20 ... +70 °C (-4 ... +158 °F)		
Enclosure			
• Material	Standard 19" insert in aluminum/steel (DIN 41494)		
• Width	21 TE (4.75")		
• Height	3 HE (5.25")		
• Rating	IP20/NEMA 1 to EN 60529		
• Mechanical load	1 g, 1 … 800 Hz sinusoidal in all directions to EN 60068-2-36		

Selection and ordering data

Transmitter MAG 5000

Description	Article No.	
Transmitter MAG 5000 Blind for compact and wall mounting; IP67/NEMA 4X/6, fibre glass reinforced polyamide		
• 11 … 30 V DC/11 … 24 V AC	**7ME6910-1AA30-0AA0**	
• 115 … 230 V AC, 50/60 Hz	**7ME6910-1AA10-0AA0**	
Transmitter MAG 5000 Display for compact and wall mounting; IP67/NEMA 4X, fibre glass reinforced polyamide		
• 11 … 30 V DC/11 … 24 V AC	**7ME6910-1AA30-1AA0**	
• 115 … 230 V AC, 50/60 Hz	**7ME6910-1AA10-1AA0**	
• 115 … 230 V AC, 50/60 Hz, with HART	**7ME6910-1AA10-1BA0**	
Transmitter MAG 5000 CT for compact and wall mounting, approved for custody transfer, without verification (no approval marks - only a complete flowmeter can be verified, i.e. sensor together with the transmitter); IP67/NEMA 4X/6, fibre glass reinforced polyamide		
• 11 … 30 V DC/11 … 24 V AC	**7ME6910-1AA30-1AD0**	
• 115 … 230 V AC, 50/60 Hz	**7ME6910-1AA10-1AD0**	
Transmitter MAG 5000 for 19" rack and wall mounting		
• 11 … 30 V DC/11 … 24 V AC	**7ME6910-2CA30-1AA0**	
• 115 … 230 V AC, 50/60 Hz	**7ME6910-2CA10-1AA0**	

Transmitter MAG 6000

Description	Article No.	
Transmitter MAG 6000 Blind for compact and wall mounting; IP67/NEMA 4X/6, fibre glass reinforced polyamide		
• 11 … 30 V DC/11 … 24 V AC	**7ME6920-1AA30-0AA0**	
• 115 … 230 V AC, 50/60 Hz	**7ME6920-1AA10-0AA0**	
Transmitter MAG 6000 Display for compact and wall mounting; IP67/NEMA 4X, fibre glass reinforced polyamide		
• 11 … 30 V DC/11 … 24 V AC	**7ME6920-1AA30-1AA0**	
• 115 … 230 V AC, 50/60 Hz	**7ME6920-1AA10-1AA0**	
Transmitter MAG 6000 for compact and wall mounting; IP65/NEMA 4, stainless steel AISI 316/1.4436 (only for sensor with stainless steel terminal box) (for remote version order stainless steel terminal box separately)		
• 11 … 30 V DC/11 … 24 V AC	**7ME6920-1QA30-1AA0**	
• 115 … 230 V AC, 50/60 Hz	**7ME6920-1QA10-1AA0**	

© Siemens 2021

Selection and ordering data (continued)

Description	Article No.	
Transmitter MAG 6000 CT for compact and wall mounting, approved for custody transfer, without verification (no approval marks - only a complete flowmeter can be verified, i.e. sensor together with the transmitter); IP67/NEMA 4X/6, fibre glass reinforced polyamide		
• 11 … 30 V DC/11 … 24 V AC	**7ME6920-1AA30-1AD0**	
• 115 … 230 V AC, 50/60 Hz	**7ME6920-1AA10-1AD0**	
Transmitter MAG 6000 SV for compact and wall mounting; special excitation frequency 44 Hz for Batch application DN ≤ 25/1" IP67/NEMA 4X/6, fibre glass reinforced polyamide		
• 11 … 30 V DC/11 … 24 V AC	**7ME6920-1AB30-1AA0**	
• 115 … 230 V AC, 50/60 Hz	**7ME6920-1AB10-1AA0**	
Transmitter MAG 6000 for 19" rack and wall mounting		
• 11 … 30 V DC/11 … 24 V AC	**7ME6920-2CA30-1AA0**	
• 115 … 230 V AC, 50/60 Hz	**7ME6920-2CA10-1AA0**	
Transmitter MAG 6000 SV for 19" rack and wall mounting; special excitation frequency 44 Hz for Batch application DN ≤ 25/1"		
• 11 … 30 V DC/11 … 24 V AC	**7ME6920-2CB30-1AA0**	
• 115 … 230 V AC, 50/60 Hz	**7ME6920-2CB10-1AA0**	
MAG 6000 19" insert, complete mounted with IP66/NEMA 4X wall mounting enclosure in ABS plastic;115 ... 230 V AC, 50/60 Hz; cable gland PG13.5	**7ME6920-2EA10-1AA0**	
MAG 6000 19" insert with safety barrier for Ex-approved sensors, complete mounted with IP66/NEMA 4X wall mounting enclosure in ABS plastic, 115 ... 230 V AC, 50/60 Hz; cable gland PG13.5		
• For ATEX 2G D sensors	**7ME6920-2MA11-1AA0**	
MAG 6000 SV 19" insert, complete mounted with IP66/NEMA 4X wall mounting enclosure in ABS plastic, special excitation frequency 44 Hz for Batch application DN ≤ 25/1"; cable gland PG13.5		
• 11 … 30 V DC/11 … 24 V AC	**7ME6920-1EB30-1AA0**	
• 115 … 230 V AC, 50/60 Hz	**7ME6920-1EB10-1AA0**	

Operating instructions for SITRANS FM MAG 5000/6000

Description	Article No.
For SITRANS FM MAG 5000/6000 IP67	
• English	**A5E02338368**
• German	**A5E02944982**
For SITRANS FM MAG 5000/6000 19"	
• English	**A5E02082880**

All literature is available to download for free, in a range of languages, at
http://www.siemens.com/processinstrumentation/documentation

Communication modules for MAG 6000

Description	Article No.	
HART (not for MAG 6000 I)	**FDK:085U0226**	
Modbus RTU/RS485	**FDK:085U0234**	
PROFIBUS PA Profile 3	**FDK:085U0236**	
PROFIBUS DP Profile 3	**FDK:085U0237**	
DeviceNet	**FDK:085U0229**	
FOUNDATION Fieldbus H1	**A5E02054250**	

Operating instructions for SITRANS F add-on modules

Description	Article No.
HART	
• English	**A5E03089708**
PROFIBUS PA/DP	
• English	**A5E00726137**
• German	**A5E01026429**
Modbus	
• English	**A5E00753974**
• German	**A5E03089262**
FOUNDATION Fieldbus	
• English	**A5E02318728**
• German	**A5E02488856**
DeviceNet	
• English	**A5E03089720**

This device is shipped with Safety Notes and a DVD containing further SITRANS FM literature.

All literature is available to download for free, in a range of languages, at
http://www.siemens.com/processinstrumentation/documentation

© Siemens 2021

3

Selection and ordering data (continued)

Accessories for MAG 5000 and MAG 6000

Description	Article No.	
Accessory kit for remote use of sensor with two 5-pin terminal blocks	**A5E34827189**	
Wall mounting unit for MAG 5000/6000 with IP67/NEMA 4X/6, terminal box in polyamide[2]		
• 4 × M20 cable glands	**FDK:085U1018**	
• 4 × ½" NPT cable glands	**FDK:085U1053**	
Special wall mounting unit for MAG 5000/6000 IP67/NEMA 4X/6, mounting bracket in stainless steel AISI 316 (1.4401), terminal box in polyamide		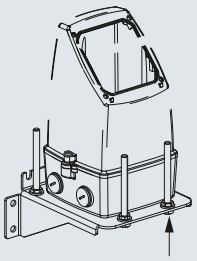
• 4 × M20 cable glands	**A5E36699702**	
• 4 × ½" NPT cable glands	**A5E36699938**	
Sun lid for MAG 5000/6000 transmitter (Frame and lid)	**A5E02328485**	
Standard coil or electrode cable, 3 × 1.5 mm²/18 gage, single shielded with PVC jacket; Temperature range -30 °C … +70 °C (-22 °F … +158 °F)		
• 5 m (16.5 ft)	**A5E02296523**	
• 10 m (33 ft)	**FDK:083F0121**	
• 20 m (65 ft)	**FDK:083F0210**	
• 30 m (98 ft)	**A5E02297309**	
• 40 m (131 ft)	**FDK:083F0211**	
• 50 m (164 ft)	**A5E02297317**	
• 60 m (197 ft)	**FDK:083F0212**	
• 100 m (328 ft)	**FDK:083F0213**	
• 150 m (492 ft)	**FDK:083F3052**	
• 200 m (656 ft)	**FDK:083F3053**	
• 500 m (1640 ft)	**FDK:083F3054**	
Special electrode cable[1] (empty pipe detection or low conductivity), 3 × 0.25 mm² double shielded with PVC jacket, Temperature range -30 °C … +70 °C (-22 °F … +158 °F)		
• 10 m (33 ft)	**FDK:083F3020**	
• 20 m (65 ft)	**FDK:083F3095**	
• 40 m (131 ft)	**FDK:083F3094**	
• 60 m (197 ft)	**FDK:083F3093**	
• 100 m (328 ft)	**FDK:083F3092**	
• 150 m (492 ft)	**FDK:083F3056**	
• 200 m (656 ft)	**FDK:083F3057**	
• 500 m (1640 ft)	**FDK:083F3058**	

Description	Article No.	
Low-noise electrode coaxial cable for low conductivity and high vibration levels, 3 × 0.13 mm², Temperature range -25 °C … +85 °C (-13 °F … +185 °F)		
• 2 m (6.6 ft)	**A5E02272692**	
• 5 m (16.5 ft)	**A5E02272723**	
• 10 m (33 ft)	**A5E02272730**	
Cable kit including standard coil cable (3 × 1.5 mm²/18 gage, single shielded with PVC jacket) and special electrode cable[1] (3 × 0.25 mm², double shielded with PVC jacket). Temperature range -30 °C … +70 °C (-22 °F … +158 °F)		
• 5 m (16.5 ft)	**A5E02296329**	
• 10 m (33 ft)	**A5E01181647**	
• 15 m (49 ft)	**A5E02296464**	
• 20 m (65 ft)	**A5E01181656**	
• 25 m (82 ft)	**A5E02296490**	
• 30 m (98 ft)	**A5E02296494**	
• 40 m (131 ft)	**A5E01181686**	
• 50 m (164 ft)	**A5E02296498**	
• 60 m (197 ft)	**A5E01181689**	
• 100 m (328 ft)	**A5E01181691**	
• 150 m (492 ft)	**A5E01181699**	
• 200 m (656 ft)	**A5E01181703**	
• 500 m (1640 ft)	**A5E01181705**	
Potting kit for IP68/NEMA 6P sealing of sensor junction box	**FDK:085U0220**	
19" safety barrier (21 TE)[1] [EEx e ia] IIC for MAG 1100 Ex sensors 12 ... 24 V, 115 ... 230 V and MAG 3100 Ex sensors, incl. back plate (A5E02559810)	**FDK:083F5034**	
Front panel mounting enclosure IP65/NEMA 2 in ABS plastic for 19" insert (21 TE)	**FDK:083F5030**	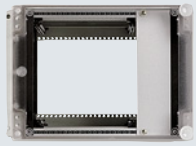
Front panel mounting enclosure IP65/NEMA 2 in ABS plastic for 19" insert (42 TE)	**FDK:083F5031**	

[1] Safety cables cannot be used with 19" safety barrier

[2] For stainless steel wall mounting kit, order:
- M20: FDK:085U1018 and A5E00836867
- ½ NPT: FDK:085U1053 and A5E00836868

© Siemens 2021

Selection and ordering data (continued)

Description	Article No.	
Panel mounting enclosure IP20/NEMA 1 in aluminum for 19“ insert (21 TE)	**FDK:083F5032**	
Panel mounting enclosure IP20/NEMA 1 in aluminum for 19“ insert (42 TE)	**FDK:083F5033**	
Wall mounting enclosure IP66/NEMA 4X in ABS plastic for 19" insert (cable glands and connection board not included).		
• 21 TE	**FDK:083F5037**	
• 42 TE	**FDK:083F5038**	
Front cover (7TE) for panel mounting enclosure	**FDK:083F4525**	
Sun shield for MAG 5000/6000 transmitter in remote design	**A5E01209496**	
Sun Shield for MAG 5000/6000 transmitter in compact design on MAG 3100 (DN 15 ... 2000 (½" ... 78") or MAG 5100 W (DN 150 ... 1200 (6" ... 48")	**A5E01209500**	

Spare parts

Description	Article No.	
Connection board (for polyamide terminalbox)		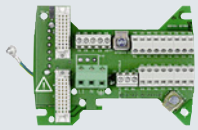
• 12 … 24 V	**A5E02559817**	
• 115 … 230 V	**A5E02559816**	
Connection board (for stainless steel terminalbox)		
• 12 … 24 V	**A5E02604280**	
• 115 … 230 V	**A5E02604272**	
Connection board MAG 5000/6000 19" insert for panel mounting enclosure, 12 ... 24 V/115 ... 230 V	**A5E02559809**	
Connection board MAG 5000/6000 19" insert with safety barrier for panel mounting enclosure, 12 ... 24 V/115 ... 230 V	**A5E02559810**	
Connection board MAG 5000/6000 19" insert with safety barrier for panel mounting enclosure, 12 ... 24 V/115 ... 230 V (only for sensors produced before October 2007)	**A5E02559811**	
Connection board MAG 5000/6000 19" insert with cleaning unit for panel mounting enclosure, 12 ... 24 V/115 ... 230 V	**FDK:083F4123**	
SENSORPROM memory unit (Sensor code and serial numbers must be specified on order)		
• 2 kB (for MAG 5000/6000/6000 I)		
- 1 pc.	**FDK:085U1005**	
- 10 pcs.	**FDK:083F5052**	
• 250 B (for MAG 2500/3000)	**FDK:085U1008**	
Display unit for MAG 5000/6000		
• Black neutral front	**FDK:085U1038**	
• SIEMENS front	**FDK:085U1039**	
HW key	**On request**	

© Siemens 2021

Selection and ordering data (continued)

Description	Article No.	
Cable glands (polyamide), 4 pcs. • M20 • ½" NPT • PG 13.5, 2 pcs.	 **A5E00822490** **A5E00822501** **FDK:083G0228**	 ½" NPT M20
Sealing screws for sensor/transmitter, 2 pcs.	**FDK:085U0221**	
Terminal box, in polyamide, inclusive lid, terminal blocks, gasket and screws • M20 • ½" NPT	 **FDK:085U1050** **FDK:085U1052**	
Terminal box lid, in polyamide	**FDK:085U1003**	
Terminal box, in stainless steel, inclusive lid, terminal blocks, gasket and screws, for MAG 6000 in stainless steel and for all Ex sensors • M20 • ½" NPT	 **A5E00836867** **A5E00836868**	
Terminal box (3A) for MAG 1100 F in polyamide, inclusive lid, terminal blocks, gasket and screws • M20 • ½" NPT	 **A5E00822478** **A5E00822479**	
Gasket for terminal box lid in polyamide or for MAG 5000/ 6000 IP67/ NEMA 4X/6 enclosure in polyamide (5 pcs.)	**A5E37086797**	
Spare part kit for remote use of sensor with twenty 5-pin terminal blocks	**A5E34346873**	
Display frame in polyamide for MAG 5000/6000 IP67/ NEMA 4X/6 (5 pcs.)	**A5E43491675**	
Connection board MAG 5000/6000 19" insert for wall mounting enclosure, 12 ... 24 V/115 ... 230 V	**A5E02559813**	

Description	Article No.	
Connection board MAG 5000/6000 19" insert with safety barrier for wall mounting enclosure, 12 ... 24 V/115 ... 230 V	**A5E02559814**	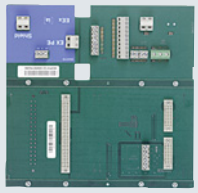
Connection board MAG 5000/6000 19" insert with safety barrier for wall mounting enclosure, 12 ... 24 V/115 ... 230 V (only for sensors produced before October 2007)	**A5E02559812**	
Connection board MAG 5000/6000 19" insert with cleaning unit for wall mounting enclosure, 12 ... 24 V/115 ... 230 V	**A5E02559815**	
SENSORPROM programmer with RS 232 interface	**FDK:083H4246**	

© Siemens 2021

Dimensional drawings

Transmitter IP67/NEMA 4X/6 compact polyamide

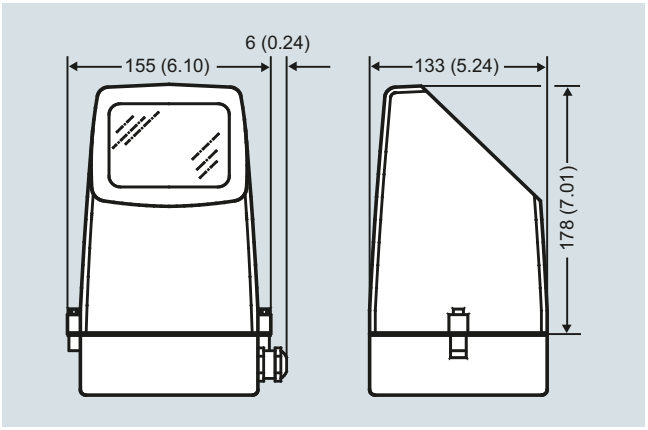

Transmitter compact mounted, dimensions in mm (inch)

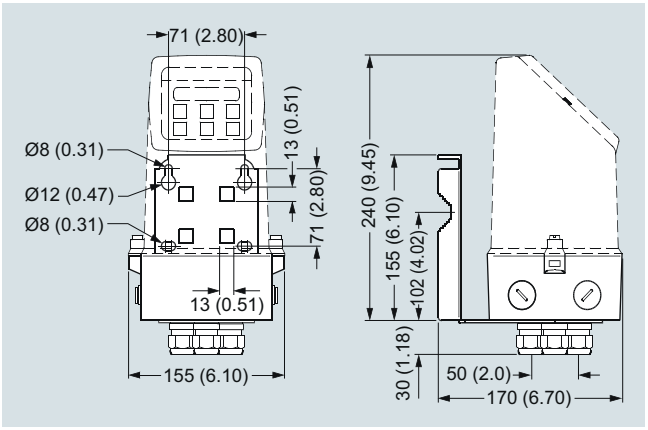

Transmitter wall mounted, dimensions in mm (inch)

Transmitter, 19" IP20/NEMA 1 standard unit

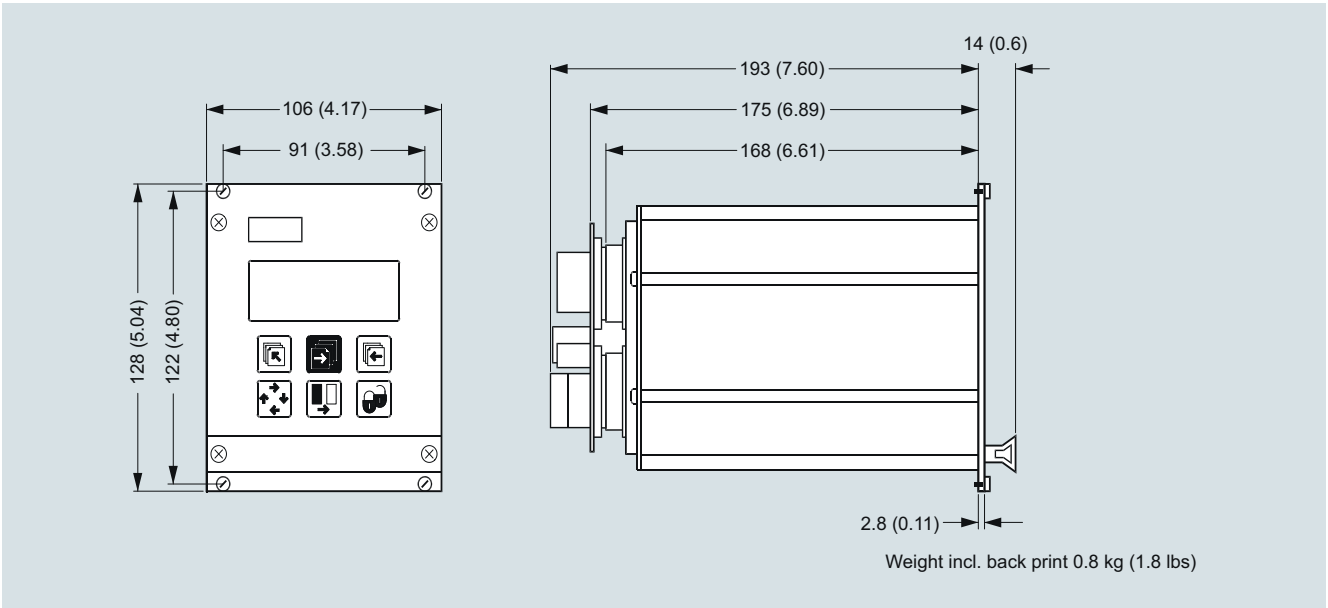

Dimensions in mm (inch)

© Siemens 2021

3

Dimensional drawings (continued)

Transmitter, wall mounting IP66/NEMA 4X, 21 TE

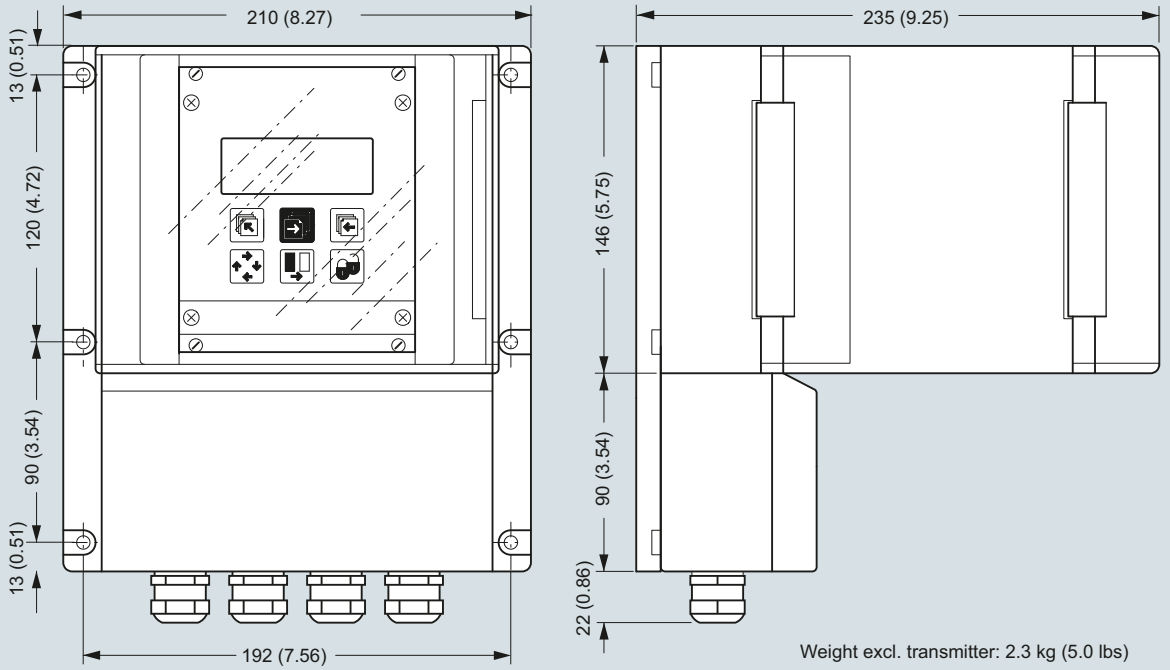

Dimensions in mm (inch)

Transmitter, wall mounting IP66/NEMA 4X, 42 TE

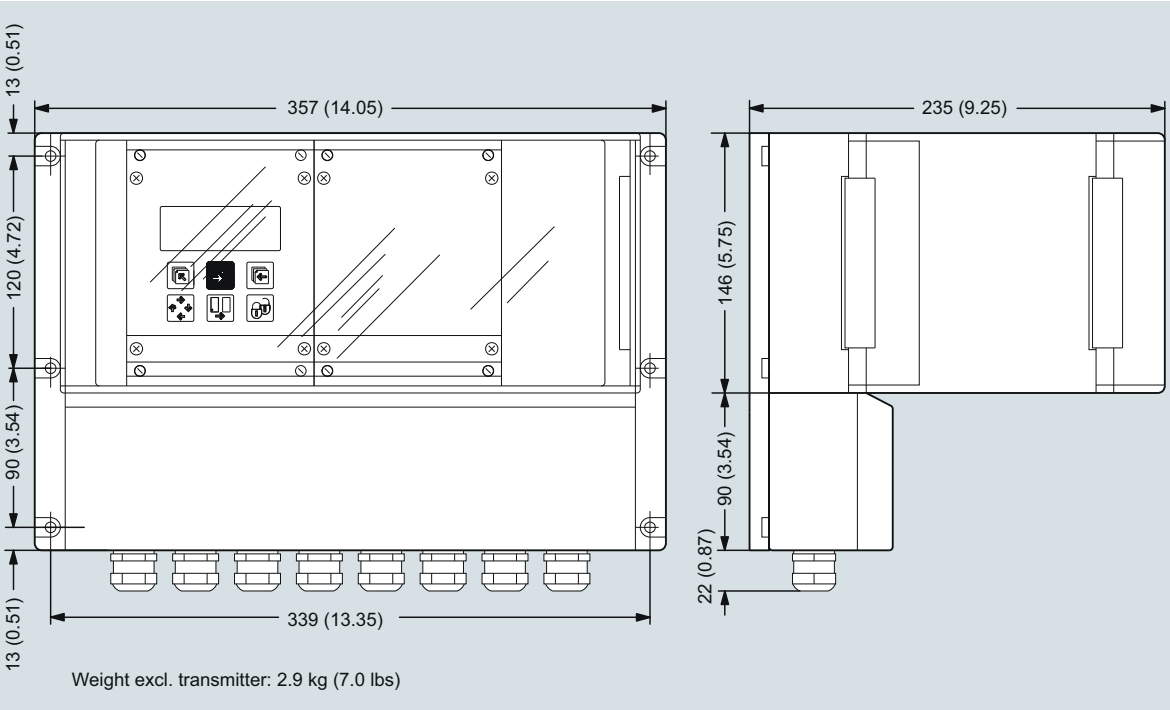

Dimensions in mm (inch)

© Siemens 2021

Dimensional drawings (continued)

Transmitter, front panel mounting IP65/NEMA 2, 21 TE

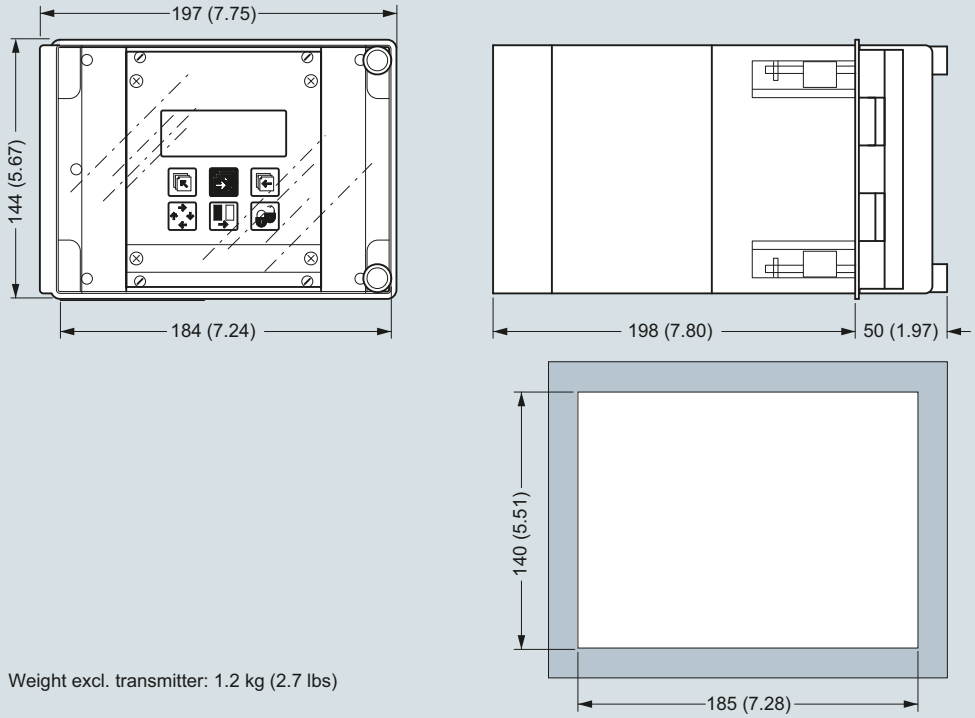

Weight excl. transmitter: 1.2 kg (2.7 lbs)

Dimensions in mm (inch)

Transmitter, front panel mounting IP65/NEMA 2, 42 TE

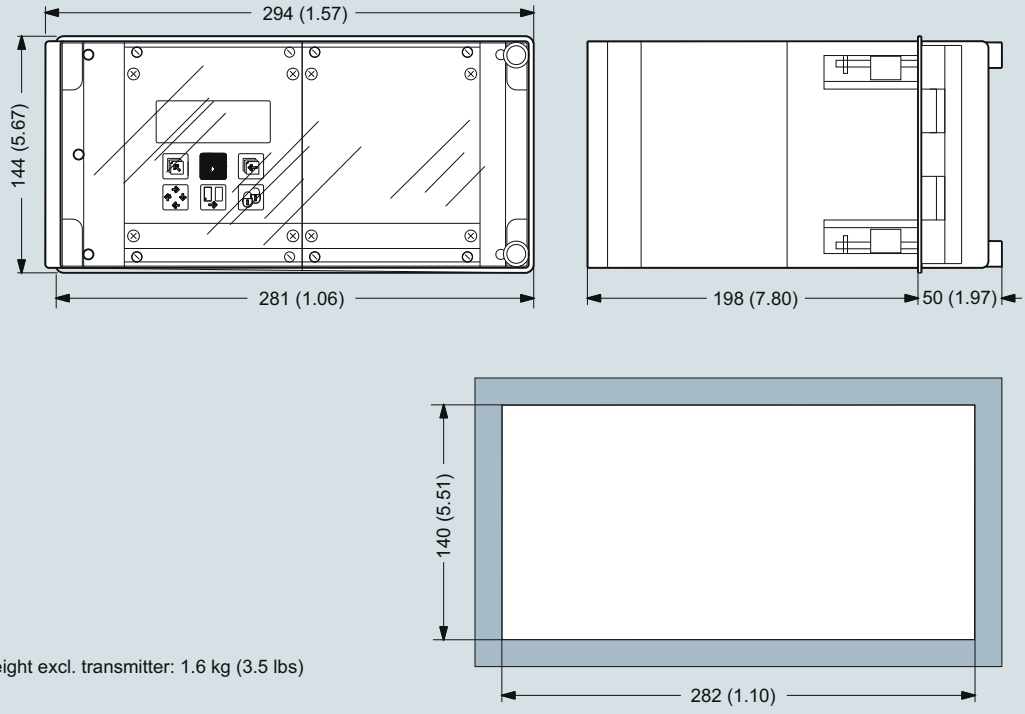

Weight excl. transmitter: 1.6 kg (3.5 lbs)

Dimensions in mm (inch)

© Siemens 2021

3

Dimensional drawings (continued)

Transmitter, panel mounting IP20/NEMA 1, 21 TE

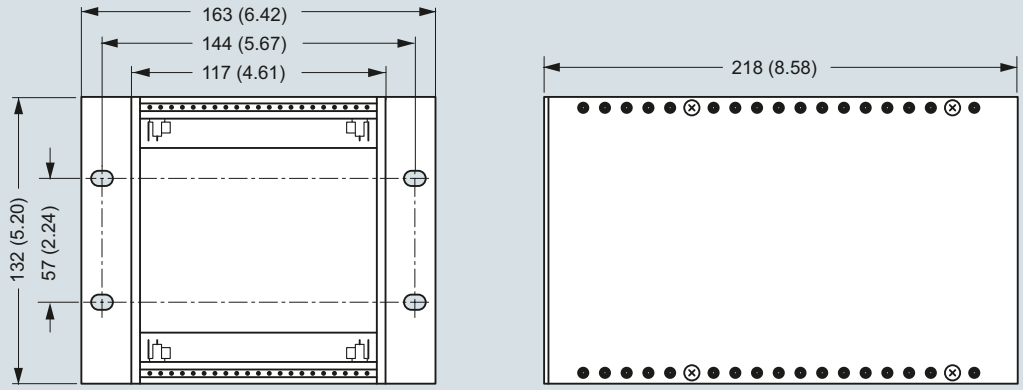

Weight: 0.7 kg (1.6 lbs)

Dimensions in mm (inch)

Transmitter, panel mounting IP20/NEMA 1, 42 TE

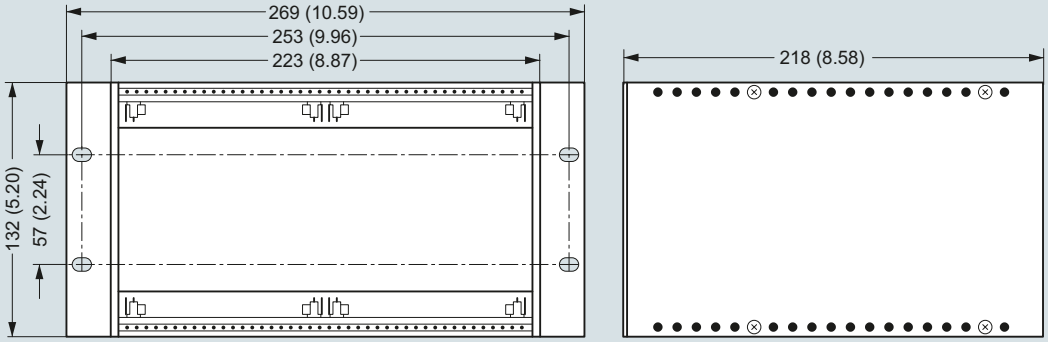

Weight: 0.9 kg (2.0 lbs)

Dimensions in mm (inch)

© Siemens 2021

Overview



The SITRANS FM MAG 6000 I/MAG 6000 I Ex de transmitter is designed for the demands in the process industry. The robust die cast aluminum housing provides superb protection, even in the most harsh industrial environments. Full input and output functionality is given even in the Ex version.

Benefits

- Full range of Ex-rated flowmeters with intrinsically safe rated input and outputs
- For compact or remote installation
- HART, FOUNDATION Fieldbus H1, DeviceNet, PROFIBUS PA and DP, Modbus RTU/RS485 add-on communication modules available
- Superior signal resolution for optimum turn down ratio
- Digital signal processing with many possibilities
- Automatic reading of SENSORPROM data for easy commissioning
- User configurable operation menu with password protection
  - 3 lines, 20 characters display in 11 languages
  - Flow rate in various units
  - Totalizer for forward, reverse and net flow as well as much more information available
- Multiple functional outputs for process control, minimum configuration with analogue, pulse/frequency and relay output (status, flow direction, limits)
- Comprehensive self-diagnostic for error indication and error logging
- Batch control
- MAG 6000 I NAMUR: compliant with NAMUR NE 21, NE 32, NE 43, NE 53 and NE 70

Design

The transmitter is designed for either compact or remote installation in non-hazardous or hazardous areas (compact mounted transmitter to be ordered together with the sensor).

Function

The following functions are available:

- Flow rate
- 2 measuring ranges
- 2 totalizers
- Low flow cut-off
- Flow direction
- Error system
- Operating time
- Uni-/bidirectional flow
- Limit switches and pulse output
- Batch control

The MAG 6000 I/6000 I Ex de is a microprocessor-based transmitter with a built-in alphanumeric display in several languages. The transmitters evaluate the signals from the associated electromagnetic sensors and also fulfil the task of a power supply unit which provides the magnet coils with a constant current.

Further information on connection, mode of operation and installation can be found in the data sheets for the sensors.

Displays and keypads

Operation of the transmitter can be carried out using:

- Keypad and display unit
- HART communicator
- PC/laptop and SIMATIC PDM software via HART communication
- PC/laptop and SIMATIC PDM software using PROFIBUS or Modbus communication

© Siemens 2021

Technical specifications

Mode of operation and design	
Measuring principle	Electromagnetic with pulsed constant field
Empty pipe	Detection of empty pipe (special cable required in remote mounted installation)
Excitation frequency	Depend on sensor size
Electrode input impedance	> 1 x 10^{14} Ω
Input	
Digital input	11 … 30 V DC, Ri = 4.4 kΩ
• Activation time	50 ms
• Current	$I_{11\ V\ DC}$ = 2.5 mA, $I_{30\ V\ DC}$ = 7 mA
Output	
Current output	
• Signal range	4 … 20 mA (active/passive)
• Load	< 560 Ω
• Time constant	0.1 … 30 s, adjustable
Digital output	
• Frequency	0 … 10 kHz, 50 % duty cycle (uni-/bidirectional)
• Time constant	0.1 … 30 s, adjustable
• Pulse (passive)	3 … 30 V DC, max. 110 mA (30 mA Ex version), 200 Ω ≤ Ri ≤ 10 kΩ (powered from connected equipment)
• Time constant	0.1 … 30 s, adjustable
Relay output	
• Time constant	Changeover relay, same as current output
• Load	42 V AC/2 A, 24 V DC/1 A
Low flow cut off	0 … 9.9 % of maximum flow
Galvanic isolation	All inputs and outputs are galvanic isolated.
Max. measuring error	
MAG 6000 I/MAG 6000 I Ex (incl. sensor)	± 0.2 % ± 1 mm/s
Rated operation conditions	
Ambient temperature	
• Operation	
- MAG 6000 I	-25 … +60 °C (-13 … +140 °F)
- MAG 6000 I Ex	-25 … +60 °C (-13 … 140 °F)
• Storage	-40 … +70 °C (-40 … +158 °F)
Mechanical load	18 … 1000 Hz random in x, y, z, directions for 2 hours according to EN 60068-2-36
	Transmitter: 1.14 g RMS
Degree of protection	IP67/NEMA 4X to IEC 529 and DIN 40050 (1 mH_2O 30 min.)
EMC performance	IEC/EN 61326-1 (all environments) IEC/EN 61326-2-5 NAMUR NE 21
Display and keypad	
Totalizer	Two eight-digit counters for forward, net or reverse flow
Display	Background illumination with alpha-numeric text, 3 x 20 characters to indicate flow rate, totalized values, settings and faults; Reverse flow indicated by negative sign
Keypad	Capacitive touch keypad with LED light for feedback indication
Time constant	Time constant as current output time constant

Design	
Enclosure material	Die cast aluminum, with corrosion resistant Basic Polyester powder coating (min. 60 µm)
• Wall mounting	Wall mounting bracket enclosed for remote version
Dimensions	See dimensional drawings
Weight	See dimensional drawings
Power supply	• Standard transmitter: 18 … 90 V DC; 115 … 230 V AC; 50 … 60 Hz
	• Ex transmitter: 18 … 30 V DC
	• Ex transmitter: 115 … 230 V AC; 50 … 60 Hz
	• Ex transmitter NAMUR: 18 … 30 V DC; 115 … 230 V AC; 50 … 60 Hz
Power consumption	• 230 V AC: 20 VA
	• 24 V DC: 9.6 W, I_N = 0.4 A, I_{ST} = 1 A (3 ms)
Certificates and approvals	
General purpose	• CE (LVD, EMC, PED, RoHS)
Hazardous areas	• ATEX, IECEx, FM, CSA, EAC Ex, NEPSI - Zone 1 Ex d e [ia] ia IIC T6 Gb • ATEX, IECEx, CSA - Zone 21 Ex tD A21 IP67 T85 °C • FM - XP IS Class I Div. 1 Groups A, B, C, D - DIP Class II+III Div. 1 Groups E, F, G
Others	• CPA (China) • EAC (Russia, Belarus, Kazakhstan) • KCs (South Korea)
Cable entries	
MAG 6000 I	
• Power supply and outputs	2 x M20 (HART)/M25 (PROFIBUS) or 2 x ½" NPT (HART)
• Sensor connection	2 x M16 or 2 x ½" NPT
MAG 6000 I Ex ATEX 2GD	
• Power supply and outputs	2 x M20
• Sensor connection	2 x M16
Communication	
Standard versions	HART, Modbus RTU/RS 485, FOUNDATION Fieldbus H1, DeviceNet, PROFIBUS PA, PROFIBUS DP add-on modules
Ex versions	HART, PROFIBUS PA (not for Ex version)

[1] Applicable for: Compact mounted MAG 6000 I Ex on MAG 3100 (sizes DN 15 ... DN 300 (½" ... 12")).

© Siemens 2021

Selection and ordering data

	Article No.
SITRANS FM Transmitter MAG 6000 I ↗	**7ME6930-**
Remote with standard wall mounting bracket, local display, die cast aluminum	**2 B A ■ ■ - 1 ■ A ■**
↗ Click on the Article No. for the online configuration in the PIA Life Cycle Portal.	
Supply voltage	
Standard transmitter: 18 ... 90 V DC; 115 ... 230 V AC, 50 ... 60 Hz	**2**
Standard transmitter (NAMUR): 18 ... 30 V DC; 115 ... 230 V AC, 50 ... 60 Hz	**3**
Ex transmitter: 18 ... 30 V DC	**4**
Ex transmitter: 115 ... 230 V AC, 50 ... 60 Hz	**5**
Ex transmitter (NAMUR): 18 ... 30 V DC; 115 ... 230 V AC, 50 ... 60 Hz	**6**
Ex approval	
Standard sensor: FM Class I, Div 2, CSA Class I, Div 2	**0**
Ex sensor: Hazardous area (ATEX 2 GD; FM Class I, Zone 1; CSA Class I, Zone 1)	**2**
Communication	
None	**A**
HART	**B**
PROFIBUS PA Profile 3	**F**
PROFIBUS DP Profile 3 (not for Ex version)	**G**
Modbus RTU/RS 485 (not for Ex version)	**E**
FOUNDATION Fieldbus H1	**J**
Cable gland entries	
Metric	**0**
½" NPT	**2**

Further design	Order code
Please add "**-Z**" to Article No. and specify Order code(s) and plain text	
Tag name plate, stainless steel (specify in plain text)	**Y17**
Tag name plate, plastic (self adhesive)	**Y18**
Special version (specify in plain text)	**Y99**

Operating instructions for SITRANS FM MAG 6000 I

Description	Article No.
• English	**A5E02083319**
• German	**A5E02210835**

All literature is available to download for free, in a range of languages, at
http://www.siemens.com/processinstrumentation/documentation

Communication modules for MAG 6000 I (All standard outputs can still be used)

Description	Article No.
HART (only for MAG 6000 I/Ex)	**FDK:085U0321**
Modbus RTU/RS 485[1)]	**FDK:085U0234**
PROFIBUS PA Profile 3	**FDK:085U0236**
PROFIBUS DP Profile 3[1)]	**FDK:085U0237**
DeviceNet[1)]	**FDK:085U0229**
FOUNDATION Fieldbus H1	**A5E02054250**



[1)] Not for Ex versions

Operating instructions for SITRANS F add-on modules

Description	Article No.
HART	
• English	**A5E03089708**
PROFIBUS PA/DP	
• English	**A5E00726137**
• German	**A5E01026429**
Modbus	
• English	**A5E00753974**
• German	**A5E03089262**
FOUNDATION Fieldbus	
• English	**A5E02318728**
• German	**A5E02488856**
DeviceNet, Englisch	**A5E03089720**

All literature is available to download for free, in a range of languages, at
http://www.siemens.com/processinstrumentation/documentation

© Siemens 2021

3

Selection and ordering data (continued)

Accessories for MAG 6000 I/6000 I Ex

Description	Article No.	
Standard coil or electrode cable, 3 × 1.5 mm²/ 18 gage, single shielded with PVC jacke		
Temperature range: -30 ... +70 °C (-22 ... +158 °F)		
• 5 m (16.5 ft)	**A5E02296523**	
• 10 m (33 ft)	**FDK:083F0121**	
• 20 m (65 ft)	**FDK:083F0210**	
• 30 m (98 ft)	**A5E02297309**	
• 40 m (131 ft)	**FDK:083F0211**	
• 50 m (164 ft)	**A5E02297317**	
• 60 m (197 ft)	**FDK:083F0212**	
• 100 m (328 ft)	**FDK:083F0213**	
• 150 m (492 ft)	**FDK:083F3052**	
• 200 m (656 ft)	**FDK:083F3053**	
• 500 m (1640 ft)	**FDK:083F3054**	
Special electrode cable (empty pipe detection or low conductivity), 3 × 0.25 mm², double shielded with PVC jacket		
Temperature range: -30 ... +70 °C (-22 ... +158 °F)		
• 10 m (33 ft)	**FDK:083F3020**	
• 20 m (65 ft)	**FDK:083F3095**	
• 40 m (131 ft)	**FDK:083F3094**	
• 60 m (197 ft)	**FDK:083F3093**	
• 100 m (328 ft)	**FDK:083F3092**	
• 150 m (492 ft)	**FDK:083F3056**	
• 200 m (656 ft)	**FDK:083F3057**	
• 500 m (1640 ft)	**FDK:083F3058**	
Cable kit including standard coil cable (3 × 1.5 mm²/ 18 gage, single shielded with PVC jacket) and special electrode cable (3 × 0.25 mm², double shielded with PVC jacket)		
Temperature range: -30 ... +70 °C (-22 ... +158 °F)		
• 5 m (16.5 ft)	**A5E02296329**	
• 10 m (33 ft)	**A5E01181647**	
• 15 m (49 ft)	**A5E02296464**	
• 20 m (65 ft)	**A5E01181656**	
• 25 m (82 ft)	**A5E02296490**	
• 30 m (98 ft)	**A5E02296494**	
• 40 m (131 ft)	**A5E01181686**	
• 50 m (164 ft)	**A5E02296498**	
• 60 m (197 ft)	**A5E01181689**	
• 100 m (328 ft)	**A5E01181691**	
• 150 m (492 ft)	**A5E01181699**	
• 200 m (656 ft)	**A5E01181703**	
• 500 m (1640 ft)	**A5E01181705**	
Low noise electrode coax cable for low conductivity and high vibration levels, 3 × 0.13 mm²		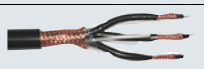
Temperature range -25 °C … +85 °C (-13 °F … +185 °F)		
• 2 m (6.6 ft)	**A5E02272692**	
• 5 m (16.5 ft)	**A5E02272723**	
• 10 m (33 ft)	**A5E02272730**	

Spare parts

Description	Article No.	
Display unit	**FDK:085U3122**	
Accessory bag including cable gland inserts and connectors for sensor cables	**FDK:085U3144**	
Display lid (Ex) in die-cast aluminum, with corrosions resitant coating (min. 60 µm)	**7ME5933-0AC01**	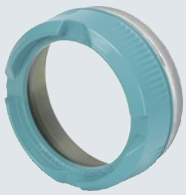
Blind lid for sensor cables connection compartment (only remote version) in die-cast aluminum, with corrosion resistant coating (min. 60 µm) incl. O-ring seal	**7ME5933-0AC02**	
Blind lid (mains supply, input/outputs) in die-cast aluminum, with corrosion resistant coating (min. 60 µm)	**7ME5933-0AC03**	
Safety clamp	**7ME5933-0AC06**	
Standard wall-mounting bracket, stainless steel AISI 316L/1.4404	**7ME5933-0AC04**	
Special wall-mounting bracket, BI 2.5 DIN 59382 X6Cr17	**7ME5933-0AC05**	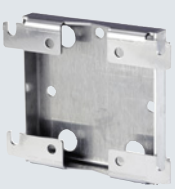

© Siemens 2021

Selection and ordering data (continued)

Complete spare part PCB unit

Description	Article No.	
MAG 6000 I std. (not for Ex), 18 ... 30 V DC; 115 ... 230 V AC Spare PCBA	**FDK:085U3123**	
MAG 6000 I std. (NAMUR), 18 ... 30 V DC; 115 ... 230 V AC Spare PCBA	**A5E31426892**	
MAG 6000 I Ex (NAMUR), 18 ... 30 V DC; 115 ... 230 V AC Spare PCBA for use with Ex sensors with increased safety e	**A5E31426877**	
(for Ex sensors: 7ME6110, 7ME6120, 7ME6140, 7ME6310, 7ME6320, 7ME6340)		
(for 7ME6330 > DN300)[1)]		
MAG 6000 I Ex d 115 ... 230 V AC Spare PCBA for use with ATEX sensors with increased safety e	**A5E01013127** [1)]	
MAG 6000 I Ex d 18 ... 30 V DC Spare PCBA for use with ATEX sensors with increased safety e	**A5E01013340** [1)]	

1) Spare pcba for MAG 6000 I Ex produced after 12/2012.

Please use online Product selector to get latest updates.

Product selector link:
http://www.pia-selector.automation.siemens.com

Dimensional drawings

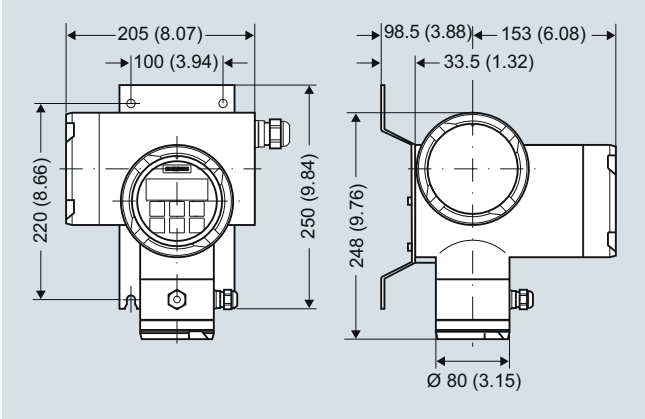

SITRANS FM transmitter MAG 6000 I with wall-mounting bracket, dimensions in mm (inch)

© Siemens 2021

MAG 1100 and MAG 1100 HT

Overview



The SITRANS FM MAG 1100 is an electromagnetic flow sensor in a compact wafer design designed for flow applications in the process industry.

Benefits

- Sensor sizes: DN 2 … 100 ($^1/_{12}$" … 4")
- Compact wafer design meets EN 1092, DIN and ANSI flange standards
- Corrosion resistant AISI 316 stainless steel sensor housing
- Highly resistant liner and electrodes fitting most extreme process media
- Temperature rating up to 200 °C (392 °F)
- Hose proof IP67/NEMA 4X enclosure rating
- Designed that patented in-situ verification can be conducted. Using SENSORPROM fingerprints.

Application

The main applications of the SITRANS FM electromagnetic flow sensors can be found in the following fields:

- Process industry
- Chemical industry
- Pharmaceutical industry
- Water treatment like e.g. chemical dosing

Design

- Compact or remote mounting possible
- Easy “plug & play” field changeability of transmitter
- Simple on site upgrade to IP68/NEMA 6P terminal box
- ATEX 2G D version
- FM Class I Div 2

Mode of operation

The flow measuring principle is based on Faraday’s law of electromagnetic induction according to which the sensor converts the flow into an electrical voltage proportional to the velocity of the flow.

Integration

The complete flowmeter consists of a flow sensor and an associated transmitter SITRANS FM MAG 5000, 6000 or 6000 I. The flexible communication concept USM II simplifies integration and update to a variety of fieldbus systems such as HART, FOUNDATION Fieldbus H1, DeviceNet, PROFIBUS DP and PA, Modbus RTU/RS 485.

© Siemens 2021

Technical specifications

Version	MAG 1100	MAG 1100 HT (High temperature)
Measuring principle	Electromagnetic induction	Electromagnetic induction
Excitation frequency (Mains supply: 50 Hz/60 Hz)	DN 2 … 65 (1/12“ … 2½"): 12.5 Hz/15 Hz DN 80, 100 (3", 4"): 6.25 Hz/7.5 Hz	DN 15 … 50 (½" … 2"): 12.5 Hz/15 Hz DN 80, 100 (3", 4"): 6.25 Hz/7.5 Hz
Process connection		
Nominal size		
• MAG 1100 (Ceramic)	DN 2 … DN 100 (1/12" … 4")	DN 15 … DN 100 (½" … 4")
• MAG 1100 (PFA)	DN 10 … DN 100 (3/8" … 4")	
Mating flanges	EN 1092-1 (DIN 2501), ANSI B 16.5 class 150 and 300 or equivalent	EN 1092-1 (DIN 2501), ANSI B 16.5 class 150 and 300 or equivalent
	Option: DN 2 … 10 (1/12" … 3/8"): G½"/NPT ½" pipe connection adapters	
Rated operating conditions		
Ambient conditions		
Ambient temperature		
• Standard sensor	-40 … +100 °C (-40 … +212 °F)	-40 … +100 °C (-40 … +212 °F)
• Ex sensor	-20 … +60 °C (-4 … +140 °F)	-20 … +60 °C (-4 … +140 °F)
• Compact with transmitter MAG 5000/6000	-20 … +60 °C (-4 … +140 °F)	
• Compact with transmitter MAG 6000 I	-20 … +60 °C (-4 … +140 °F)	
• Compact with transmitter MAG 6000 I Ex	-20 … +60 °C (-4 … 140 °F)	
Temperature of medium		
• MAG 1100 (Ceramic)	-20 … +150 °C (-4 … +302 °F)	-20 … +200 °C (-4 … +392 °F)
• MAG 1100 Ex (Ceramic)	-20 … +150 °C (-4 … +302 °F)	-20 … +180 °C (-4 … +356 °F)
• MAG 1100 (PFA)	-30 … +130 °C (-22 … +266 °F) Suitable for steam sterilization at 150 °C (302 °F)	
Temperature shock		
• MAG 1100 (Ceramic)		
- Duration ≤ 1 min, followed by 10 min rest	• DN 2, 3 (1/12", 1/8") No limitations	• DN 15, 25: Max. ΔT ≤ 80 °C/min (½", 1": Max. ΔT ≤ 144 °F/min)
	• DN 6, 10, 15, 25: Max. ΔT ≤ 80 °C/min (¼", 3/8", ½", 1": Max. ΔT ≤ 144 °F/min)	• DN 40, 50: Max. ΔT ≤ 70 °C/min (1½", 2": Max. ΔT ≤ 126 °F/min)
	• DN 40, 50, 65: Max. ΔT ≤ 70 °C/min (1½", 2", 2½": Max. ΔT ≤ 126 °F/min)	• DN 80, 100: Max. ΔT ≤ 60 °C/min (3", 4": Max. ΔT ≤ 108 °F/min)
	• DN 80, 100: Max. ΔT ≤ 60 °C/min (3", 4": Max. ΔT ≤ 108 °F/min)	
• MAG 1100 (PFA)	Max. ± 100 °C (212 °F) momentarily	
Operating pressure		
• MAG 1100 (Ceramic)	• DN 2 … 65: 40 bar (1/12" … 2½": 580 psi)	• DN 15 … 50: 40 bar (½" … 2": 580 psi)
	• DN 80: 37.5 bar (3": 540 psi)	• DN 80: 37.5 bar (3": 540 psi)
	• DN 100: 30 bar (4": 435 psi)	• DN 100: 30 bar (4": 435 psi)
	Vacuum: 1 x 10^{-6} bar_{abs} (1.5 x 10^{-5} psi_{abs})	Vacuum: 1 x 10^{-6} bar_{abs} (1.5 x 10^{-5} psi_{abs})
• MAG 1100 (PFA)	20 bar (290 psi)	
	Vacuum: 0.02 bar_{abs} (0.3 psi_{abs})	
	DN 80 … DN 100: CO_2 pressure max. 7 bar (101.5 psi)	
Mechanical load (vibration)	• 18 … 1000 Hz random in x, y, z, directions for 2 hours according to EN 60068-2-36	• 18 … 1000 Hz random in x, y, z, directions for 2 hours according to EN 60068-2-36
	• Sensor: 3.17 g RMS	• Sensor: 3.17 g RMS
	• Sensor with compact MAG 5000/6000 mounted transmitter: 3.17 g RMS	
	• Sensor with compact MAG 6000 I/6000 I Ex mounted transmitter: 1.14 g RMS	
	• For compact installation with the MAG 6000 I, transmitter to be supported to avoid tension on sensor part.	
Enclosure rating (standard)	IP67 to EN 60529 (NEMA 4X), 1 mH_2O for 30 min	IP67 to EN 60529 (NEMA 4X), 1 mH_2O for 30 min
EMC	2014/30/EU	2014/30/EU

© Siemens 2021

3

Technical specifications (continued)

Version	MAG 1100	MAG 1100 HT (High temperature)
Design		
Weight	See Dimensional drawings	See Dimensional drawings
Material		
• Enclosure		
- MAG 1100	Stainless steel AISI 316L/1.4404	Stainless steel AISI 316L/1.4404
• Terminal box		
- Standard	Fibre glass reinforced polyamide (not for Ex)	Stainless steel AISI 316/1.4436
- Option	Stainless steel AISI 316/1.4436	
• Fixing studs	Stainless steel AISI 304/1.4301, Number and size to EN 1092-1:2001	Stainless steel AISI 304/1.4301, Number and size to EN 1092-1:2001
• Gaskets		
- Standard	EPDM (max. 150 °C, PN 40 (max. 302 °F, 600 psi))	Graphite (max. 200 °C, PN 40 (max. 392 °F, 600 psi))
- Option	• Graphite (max. 200 °C, PN 40 (max. 392 °F, 600 psi))	
	• PTFE (max. 130 °C, PN 25 (max. 266 °F, 300 psi))	
• Pipe connection adapters: DN 2, 3, 6 and 10 (1/12", 1/8", ¼" and 3/8")	• Stainless steel, AISI 316 /1.4436	
	• Hastelloy C22/2.4602	
	• PVDF	
Liner		
• MAG 1100 (Ceramic)	• DN 2, 3 (1/12", 1/8"): Zirconium oxide (ZrO_2) (ceramic)	DN 15 … 100 (½", 4"): Aluminum oxide Al_2O_3
	• DN 6 … 100 (¼" … 4"): Aluminum oxide Al_2O_3	
• MAG 1100 (PFA)	Reinforced PFA (not for Ex)	
Electrodes		
• MAG 1100 (Ceramic)	• DN 10 … 100 (3/8" … 4"): Platinum with gold/Titanium brazing alloy	Platinum with gold/Titanium brazing alloy
	• DN 2 … 6 (1/12" … ¼"): Platinum	
• MAG 1100 (PFA)	• DN 10 … 15 (3/8" … ½"): Hastelloy C276/2.4819	
	• DN 25 … 100 (1" … 4"): Hastelloy C22/2.4602	
Cable entries	• Remote installation 2 x M20 or 2 x ½" NPT	Remote installation 2 x M20 or 2 x ½" NPT
	• Compact installation	
	- MAG 5000/MAG 6000: 4 x M20 or 4 x ½" NPT	
	- MAG 6000 I: 2 x M25 (for supply/output)	
	- MAG 6000 I Ex: 2 x M25 (for supply/output)	
Certificates and approvals		
Calibration		
• Default calibration	Zero-point, 2 x 25 %, 2 x 90 %	Zero-point, 2 x 25 %, 2 x 90 %
• Special calibration	5-point calibration: 20 %, 40 %, 60 %, 80 %, 100 % of factory Q_{max} 10-point calibration: ascending and descending at 20 %, 40 %, 60 %, 80 %, 100 % of factory Q_{max} Matched-pair calibration: default, 5-point or 10-point	
Hazardous areas		
• MAG 1100 F (Ceramic)		
- Ex-sensor in compact or remote version with MAG 6000 I Ex	• ATEX, EAC Ex - Zone 1 Ex d e ia IIB T6 Gb • ATEX - Zone 21 Ex tD A21 IP67	• ATEX, EAC Ex - Zone 1 Ex d e ia IIB T6 Gb • ATEX - Zone 21 Ex tD A21 IP67
- Standard sensor in compact or remote version with MAG 5000/6000/6000 I	• FM - NI Class I Div. 2 Groups A, B, C, D	• FM - NI Class I Div. 2 Groups A, B, C, D
• MAG 1100 F (PFA)		
- Standard sensor in compact or remote version with MAG 5000/6000/6000 I	• FM - NI Class I Div. 2 Groups A, B, C, D	
Pressure equipment	• PED – 2014/68/EU • CRN (only PFA)	• PED – 2014/68/EU
Others	• EAC (Russia, Belarus, Kazakhstan)	• EAC (Russia, Belarus, Kazakhstan)

For technical specification for transmitter - please see section about transmitters.

© Siemens 2021

Selection and ordering data

	Article No.
Sensor SITRANS FM MAG 1100 ↗	**7ME6110-**
EPDM gaskets included	■ ■ **A** ■ **0** **-** ■ ■ ■ ■
↗ Click on the Article No. for the online configuration in the PIA Life Cycle Portal.	
Diameter	
DN 2 (1/12“)	**1 D**
DN 3 (1/8“)	**1 H**
DN 6 (¼“)	**1 M**
DN 10 (3/8“)	**1 R**
DN 15 (½“)	**1 V**
DN 25 (1“)	**2 D**
DN 40 (1½“)	**2 R**
DN 50 (2“)	**2 Y**
DN 65 (2½“)	**3 F**
DN 80 (3“)	**3 M**
DN 100 (4“)	**3 T**
Liner material	
PFA - DN 10 ... 100 (3/8“ ... 4“)	**1**
Ceramic	**2**
Electrode material	
Hastelloy C (only with PFA liner)	**1**
Platinum (only with ceramic liner)	**2**
Transmitter	
Standard sensor for remote transmitter (order transmitter separately)	**A**
Ex sensor for remote transmitter (order transmitter separately)	**B**
MAG 6000 I, Aluminum 18 ... 90 V DC, 115 ... 230 V AC	**C**
MAG 6000 I, Aluminum 18 ... 30 V DC, Ex	**D**
MAG 6000 I, Aluminum 115 ... 230 V AC, Ex	**E**
MAG 6000 Polyamide, 11 ... 30 V DC/11 … 24 V AC	**H**
MAG 6000, Polyamide, 115 ... 230 V AC	**J**
MAG 5000, Polyamide, 11 ... 30 V DC/11 ... 24 V AC	**K**
MAG 5000, Polyamide, 115 ... 230 V AC	**L**
Communication	
No communication, add-on possible	**A**
HART	**B**
PROFIBUS PA Profile 3 (only MAG 6000/MAG 6000 I)	**F**
PROFIBUS DP Profile 3 (not for Ex) (only MAG 6000/MAG 6000 I)	**G**
Modbus RTU/RS 485 (not for Ex) (only MAG 6000/MAG 6000 I)	**E**
FOUNDATION Fieldbus H1 (only MAG 6000/MAG 6000 I)	**J**
Cable glands/terminal box	
Metric: Polyamide terminal box or MAG 6000 I compact	**1**
½" NPT: Polyamide terminal box or MAG 6000 I compact	**2**
Metric: Stainless steel terminal box	**3**
½" NPT: Stainless steel terminal box	**4**

[1] Quick ship only in combination with Ceramic liner

	Order code
Additional information	
Please add “**-Z**“ to Article No. and specify Order code(s) and plain text.	
Certificates	
• Material certificate according to EN 10204-3.1	**C12**
• Factory certificate according to EN 10204-2.2	**C14**
• Factory certificate according to EN 10204-2.1	**C15**
Special calibration	
• 5-point calibration[1]	**D01**
• 10-point calibration[2]	**D06**
• Default (2 × 25 % and 2 × 90 %) matched-pair calibration	**D11**
• 5-point, matched-pair calibration[1]	**D15**
• 10-point, matched-pair calibration[2]	**D18**
Terminal blocks	
• Factory mounted terminal blocks	**N02**
Country specific label	
• CRN (Canadian Registration Number)	**H25**
Tag name plate, stainless steel (specify in plain text)	**Y17**
Tag name plate, plastic (self adhesive)	**Y18**
Customer-specific transmitter setting	**Y20**
Factory mounted sensor cables	
• Sensor cables wired (specify Article No. for sensor cables and order cables separately)	**Y40**
• Sensor cables wired and IP68 sealing (specify Article No. for sensor cables and order cables separately)	**Y41**
Additional calibrations	
• Accredited matched-pair calibration acc. to ISO/IEC 17025: 2005	**On request**[3]
• Customer-specified calibration up to 10 points	**On request**[3]
• Customer-witnessed calibration Any of above calibration	**On request**[3]

[1] 20 %, 40 %, 60 %, 80 %, 100 % of factory Q_{max}

[2] Ascending and descending at 20 %, 40 %, 60 %, 80 %, 100 % of factory Q_{max}

[3] Product Variation Request (PVR)

© Siemens 2021

3

Selection and ordering data

	Article No.
Sensor SITRANS FM MAG 1100 HT High Temperature ↗	**7ME6120-**
Ceramic liner, Platinum electrode, Graphite gaskets included	■ ■ **A 2 0 - 2** ■ **A** ■
↗ Click on the Article No. for the online configuration in the PIA Life Cycle Portal.	
Diameter	
DN 15 (½")	**1 V**
DN 25 (1")	**2 D**
DN 40 (1½")	**2 R**
DN 50 (2")	**2 Y**
DN 80 (3")	**3 M**
DN 100 (4")	**3 T**
Transmitter	
Standard sensor for remote transmitter (order transmitter separately)	**A**
Ex sensor for remote transmitter (order transmitter separately)	**B**
Cable glands/terminal box	
Metric: Stainless steel terminal box	**3**
½" NPT: Stainless steel terminal box	**4**
Additional information	Order code
Please add "**-Z**" to Article No. and specify Order code(s) and plain text.	
Certificates	
• Material certificate according to EN 10204-3.1	**C12**
• Factory certificate according to EN 10204-2.2	**C14**
• Factory certificate according to EN 10204-2.1	**C15**
Special calibration	
• 5-point calibration[1)]	**D01**
• 10-point calibration[2)]	**D06**
• Default (2 × 25 % and 2 × 90 %) matched-pair calibration	**D11**
• 5-point, matched-pair calibration[1)]	**D15**
• 10-point, matched-pair calibration[2)]	**D18**
Terminal blocks	
• Factory mounted terminal blocks	**N02**
Tag name plate, stainless steel (specify in plain text)	**Y17**
Tag name plate, plastic (self adhesive)	**Y18**
Customer-specific transmitter setting	**Y20**
Factory mounted sensor cables	
• Sensor cables wired (specify Article No. for sensor cables and order cables separately)	**Y40**
• Sensor cables wired and IP68 sealing (specify Article No. for sensor cables and order cables separately)	**Y41**
Additional calibrations	
• Accredited matched-pair calibration acc. to ISO/IEC 17025: 2005	**On request**[3)]
• Customer-specified calibration up to 10 points	**On request**[3)]
• Customer-witnessed calibration	**On request**[3)]
Any of above calibration	

1) 20 %, 40 %, 60 %, 80 %, 100 % of factory Q_{max}

2) Ascending and descending at 20 %, 40 %, 60 %, 80 %, 100 % of factory Q_{max}

3) Product Variation Request (PVR)

Operating instructions for SITRANS FM MAG 1100

Description	Article No.
• English	**A5E02435647**

All literature is available to download for free, in a range of languages, at
https://www.siemens.com/processinstrumentation/documentation

Accessories

Description	Article No.	
Potting kit for IP68/ NEMA 6P sealing of sensor junction box	**FDK:085U0220**	

© Siemens 2021

Selection and ordering data — Article No.

Accessories for MAG 1100 sensor

Pipe connection ½" external thread

For DN 2 ... 10 (1/12" ... 3/8") sensor, material: Stainless steel AISI 316L 2 pcs. pipe connections, 2 pcs. EPDM gaskets, 12 pcs. M4x12 screws



- R½" ISO 7-1 tappered thread — **FDK:083G0080**
- ½" NPT thread — **FDK:083G4330**

For DN 2 … 10 (1/12" … 3/8") sensor, material: Hastelloy C, 2 pcs. pipe connections, 2 pcs. PTFE gaskets, 12 pcs. M4x12 screws

- R½" ISO 7-1 tapered thread — **FDK:083G4332**
- ½" NPT thread — **FDK:083G4331**

For DN 2 … 10 (1/12" … 3/8") sensor, material PVDF (Kynar 1000) 2 pcs. pipe connections (max. 70 °C, PN 8 bar/max 158 °F, 116 PSI), 1 pc. grounding ring 1), 1 pc. grounding wire, 3 pcs. PTFE gaskets, 2 pcs. space rings, 6 pcs. M4x12 and 6 pcs. M4x20 screws

- R½" ISO 7-1 tapered thread incl. grounding ring — **A5E01018395**
- ½" NPT thread incl. grounding ring — **A5E01018400**

EPDM gaskets

Material: EPDM; each set includes:
2 pcs. EPDM gaskets, 1 pc. grounding wire, 1 pc. M6 screw, 1 pc. nut, 1 pc. washer, 1 pc. bolt grounding plate



- DN 2 … 10 (1/12" … 3/8") — **FDK:083G3116**
- DN 15 (½"") — **FDK:083G3117**
- DN 25 (1") — **FDK:083G3119**
- DN 40 (1½") — **FDK:083G3121**
- DN 50 (2") — **FDK:083G3122**
- DN 65 (2½") — **FDK:083G3123**
- DN 80 (3") — **FDK:083G3124**
- DN 100 (4") — **FDK:083G3125**

PTFE gaskets

Material: PTFE; each set includes:
2 pcs. gaskets, 2 pcs. grounding wires, 3 pcs. M6 screws (DN 2 … DN 10: 12 pcs. M4x14)



- DN 2 … 10 (1/12" … 3/8") — **FDK:083G0156**
- DN 15 (½") — **FDK:083G0157**
- DN 25 (1") — **FDK:083G0159**
- DN 40 (1½") — **FDK:083G0161**
- DN 50 (2") — **FDK:083G0162**
- DN 65 (2½") — **FDK:083G0163**
- DN 80 (3") — **FDK:083G0164**
- DN 100 (4") — **FDK:083G0165**

Graphite gaskets

Material: Graphite; conductive, each set includes:
2 pcs. gaskets (can also be used as grounding ring)



- DN 2 … 10 (1/12" … 3/8") — **FDK:083G0116**
- DN 15 (½") — **FDK:083G0117**
- DN 25 (1") — **FDK:083G0119**
- DN 40 (1½") — **FDK:083G0121**
- DN 50 (2") — **FDK:083G0122**
- DN 65 (2½") — **FDK:083G0123**
- DN 80 (3") — **FDK:083G0124**
- DN 100 (4") — **FDK:083G0125**

Grounding ring (stainless steel)

Material: AISI 316/1.4436; each set includes:
1 pc. grounding ring[1)], 3 pcs. PTFE gaskets,
1 pc. earth wire, 1 pc. M6 screw



- DN 2 … 10 (1/12" … 3/8") — **FDK:083G0686**
- DN 15 (½") — **FDK:083G0687**
- DN 25 (1") — **FDK:083G0689**
- DN 40 (1½") — **FDK:083G0691**
- DN 50 (2") — **FDK:083G0692**
- DN 65 (2½") — **FDK:083G0693**
- DN 80 (3") — **FDK:083G0694**
- DN 100 (4") — **FDK:083G0695**

Grounding ring (Hastelloy C)

Material: Hastelloy C22/2.4602; each set includes:
1 pc. grounding ring[1)], 3 pcs. PTFE gaskets,
1 pc. earth wire, 1 pc. M6 screw



- DN 2 … 10 (1/12" … 3/8") — **FDK:083G3256**
- DN 15 (½") — **FDK:083G3257**
- DN 25 (1") — **FDK:083G3259**
- DN 40 (1½") — **FDK:083G3261**
- DN 50 (2") — **FDK:083G3262**
- DN 65 (2½") — **FDK:083G3263**
- DN 80 (3") — **FDK:083G3264**
- DN 100 (4") — **FDK:083G3265**

Grounding ring (Tantalum)

Material: Tantalum; each set includes:
1 pc. grounding ring[1)], 3 pcs. PTFE gaskets,
1 pc. earth wire, 1 pc. M6 screw

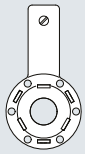

- DN 2 … 10 (1/12" … 3/8") — **A5E01181599**



- DN 15 (½") — **A5E01181606**
- DN 25 (1") — **A5E01181610**
- DN 40 (1½") — **A5E01181613**
- DN 50 (2") — **A5E01181615**
- DN 65 (2½") — **A5E01181616**
- DN 80 (3") — **A5E01181619**
- DN 100 (4") — **A5E01181622**

Studs and nuts

for DN 100 PN 25/40, 8 pcs. M20 studs, 16 pcs. M20 nuts

Material: AISI 304/1.4305



- DN 100 (4") — **FDK:083G0226**

Mounting kit

Material: Stainless steel 300 series, each kit includes:
1 pc. clamp block, 1 pc. clamp, 1 pc. bracket,
4 pcs. M8x20 screw, 2 pcs. M8 nut, 6 pcs. M8 split lockwasher, 2 pcs. M6 U-bolts

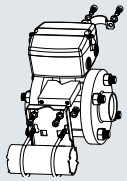

- DN 2 … 100 (1/12" … 4") — **A5E38288519**

[1)] Thickness of grounding ring is 2 mm (0.08 inch), material Hastelloy C22/2.4602.

© Siemens 2021

3

Dimensional drawings

Sensor MAG 1100, compact/remote

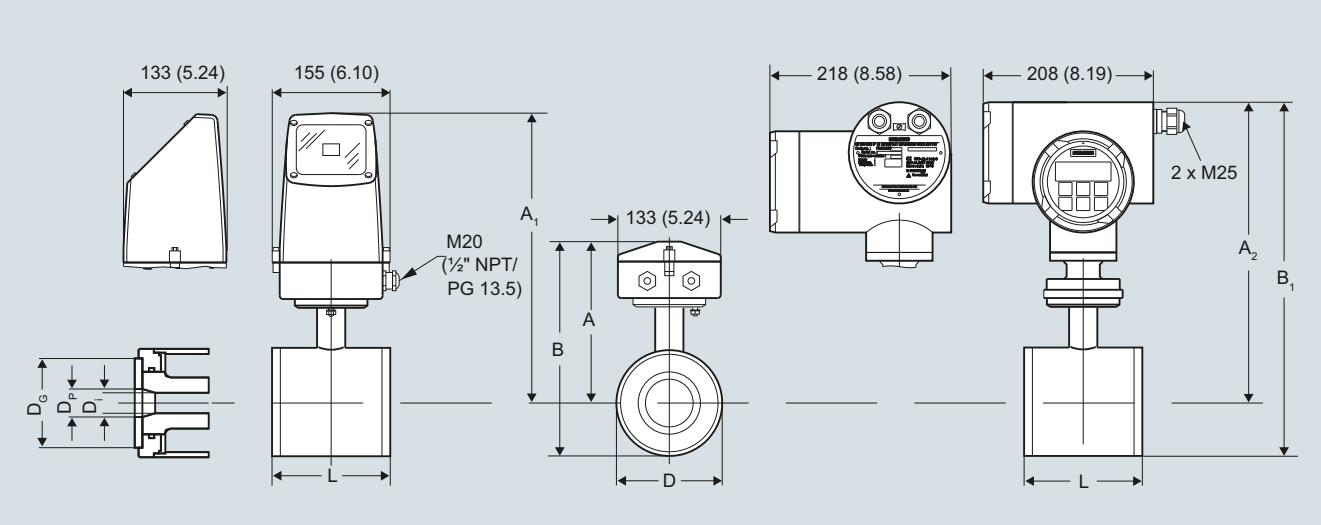

Dimensions in mm (inch)

Important note: For compact installation with MAG 6000 I/Ex - transmitter to be supported to avoid tension on the sensor part

Size DN	A[1] [mm]	B[1] [mm]	A_1/A_2[3] [mm]	B_1 [mm]	D [mm]	D_i [mm]	D_i (PFA) [mm]	D_P [mm]	D_G [mm]	Weight[2] [kg]
2	161	186	315	340	48.7	2		17.3	34	2.2
3	161	186	315	340	48.7	3		17.3	34	2.2
6	161	186	315	340	48.7	6		17.3	34	2.2
10	161	186	315	340	48.7	10	10	13.6	34	2.2
15	161	186	315	340	48.7	15	16	17.3	40	2.2
25	169	201	323	354	63.5	25	26	28.5	56	2.7
40	179	221	333	375	84.0	40	38	43.4	75	3.4
50	188	239	342	393	101.6	50	50	54.5	90	4.2
65	198	258	351	412	120.9	65	66	68.0	112	5.5
80	204	270	357	424	133.0	80	81	82.5	124	7.0
100	217	296	370	450	159.0	100	100	107.1	150	10.0

Size [inch]	A[1] [inch]	B[1] [inch]	A_1/A_2[3] [inch]	B_1 [inch]	D [inch]	D_i [inch]	D_i (PFA) [inch]	D_P [inch]	D_G [inch]	Weight[2] [lbs]
1/12	6.34	7.33	12.40	13.39	1.92	0.08		0.68	1.34	4.8
1/8	6.34	7.33	12.40	13.39	1.92	0.12		0.68	1.34	4.8
¼	6.34	7.33	12.40	13.39	1.92	0.24		0.68	1.34	4.8
3/8	6.34	7.33	12.40	13.39	1.92	0.39	0.39	0.53	1.34	4.8
½	6.34	7.33	12.40	13.39	1.92	0.59	0.63	0.68	1.57	4.8
1	6.66	7.92	12.72	13.94	2.50	0.98	1.02	1.12	2.20	5.9
1½	7.05	8.70	13.11	14.76	3.31	1.57	1.50	1.71	2.95	7.5
2	7.40	9.41	13.47	15.47	4.00	1.97	1.97	2.15	3.54	9.2
2½	7.80	10.16	13.82	16.22	4.76	2.56	2.60	2.68	4.41	12
3	8.03	10.63	14.06	16.70	5.24	3.15	3.19	3.25	4.88	15
4	8.54	11.65	14.57	17.72	6.26	3.94	3.94	4.22	5.91	22

1) 14.5 mm (0.571") shorter when the stainless steel terminal box is used (Ex or high temperature 200 °C (392 °F) version).

2) With transmitter MAG 5000 or MAG 6000 installed, weight is increased by approximately 0.8 kg (1.8 lb).
With MAG 6000 I weight is increased with 5.5 kg (12.1 lbs).

3) A_2 is 3 mm (0.12") shorter than A_1

© Siemens 2021

Dimensional drawings (continued)

The total built-in length “L” [mm]/[inch] before assembling depends on the gasket selected.

Size		EPDM		Graphite		PTFE (Teflon)		Without gasket		Grounding ring	
DN	Inch	[mm]	[inch]	[mm]	[inch]	[mm]	[inch]	[mm]	[inch]	[mm]	[inch]
2 … 10 [1]	$^1/_{12}$ … $^3/_8$	64	2.52	66	2.60	70	2.75	64	2.52	77	3.03
15	½	65	2.56	66	2.60	70	2.75	64	2.52	77	3.03
25	1	80	3.15	81	3.19	85	3.35	79	3.10	92	3.62
40	1½	95	3.74	96	3.78	100	3.94	94	3.70	107	4.21
50	2	105	4.13	106	4.17	110	4.33	104	4.05	117	4.61
65	2½	130	5.12	131	5.15	135	5.31	129	5.05	142	5.60
80	3	155	6.10	156	6.14	160	6.30	154	6.00	167	6.57
100	4	185	7.28	186	7.31	190	7.48	184	7.20	197	7.76

[1] Mounting between two flanges

Sensor MAG 1100 DN 2 … 10 ($^1/_{12}$" … $^3/_8$") with adapters

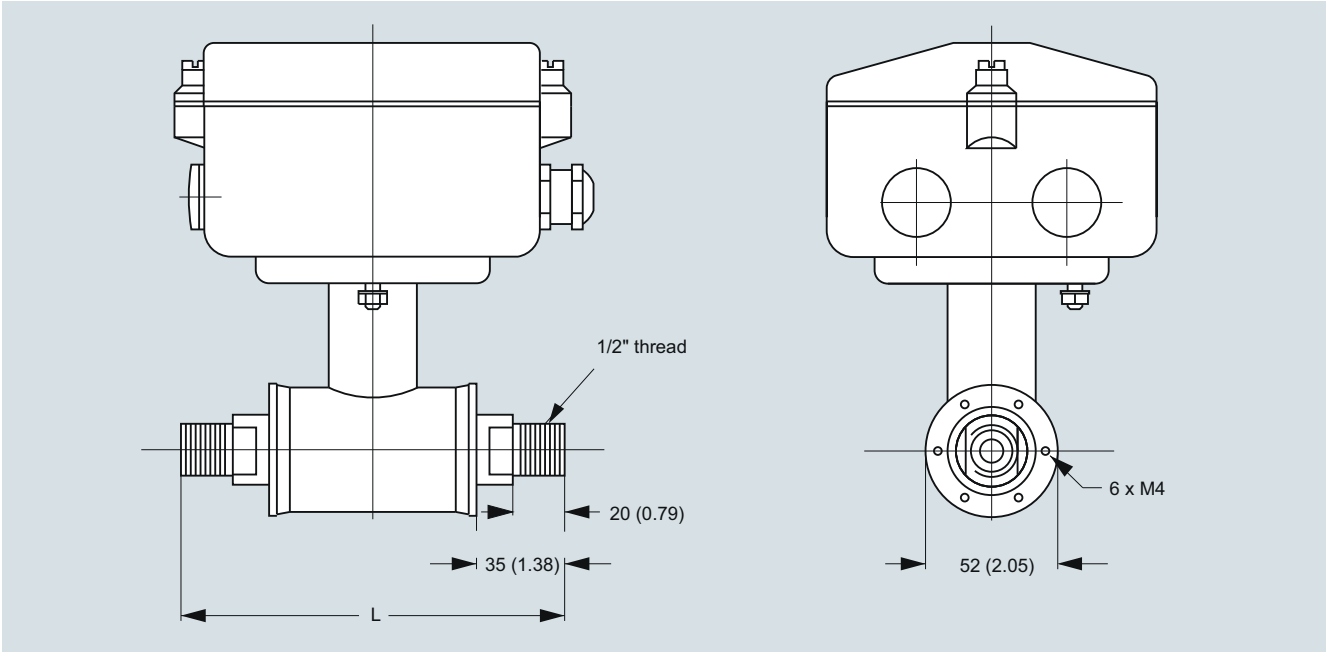

The MAG 1100 DN 2, 3, 6 and 10 ($^1/_{12}$", $^1/_8$", ¼" and $^3/_8$") are prepared for assembly with the ½" pipe connections. Dimensions in mm (inch)

The length “L“ varies dependent on the gasket choice.

Stainless steel and Hastelloy pipe connections								PVDF pipe connections	
Without gasket		EPDM		Graphite		PTFE		PTFE	
[mm]	[inch]	[mm]	[inch]	[mm]	[inch]	[mm]	[inch]	[mm]	[inch]
150	5.9	150	5.9	152	6.0	156	6.1	133	5.2

Important note:
For compact installation with the MAG 6000 I, transmitter to be supported to avoid tension on sensor part.

© Siemens 2021

MAG 1100 F

Overview



The electromagnetic sensor SITRANS FM MAG 1100 F is designed to meet applications in the food and beverage industry.

Benefits

- Sensor sizes: DN 10 to DN 100 (3/8" to 4")
- AISI 316 stainless steel enclosure
- Sensor: Hygienic connection, 3A approval and EHEDG certified
- Sanitary design for CIP/SIP cleaning
- Easy commissioning, the SENSORPROM unit automatically updates settings
- Hose proof IP67/NEMA 4X enclosure rating
- Designed that patented in-situ verification can be conducted. Using SENSORPROM fingerprints.

Application

The main applications of the SITRANS FM electromagnetic sensors can be found in the following fields:

- Food industry
- Beverage industry
- Pharmaceutical industry

Design

- Unique mechanical design with a wide range of customer specified sanitary connection
- Compact or remote mounting possible easy “plug & play” field changeable
- Simple on site upgrade to IP68/NEMA 6P terminal box
- ATEX 2G D version for hazardous areas (ceramic liner)

Mode of operation

The flow measuring principle is based on Faraday’s law of electromagnetic induction according to which the sensor converts the flow into an electrical voltage proportional to the velocity of the flow.

Integration

The complete flowmeter consists of a sensor and an associated transmitter SITRANS FM MAG 5000, 6000 and 6000 I.
The flexible communication concept USM II simplifies integration and update to a variety of fieldbus systems such as PROFIBUS DP and PA, Modbus RTU/RS 485, HART, FOUNDATION Fieldbus H1, DeviceNet.

Pressure/temperature curve; material AISI 316L/1.4404

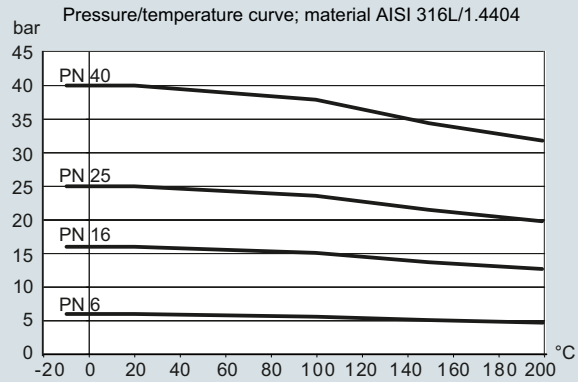

Pressure/temperature curve; material AISI 316L/1.4404

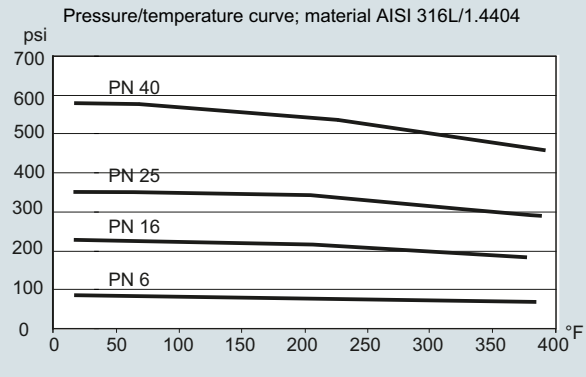

© Siemens 2021

Technical specifications

Measuring principle	Electromagnetic induction
Excitation frequency (Mains supply: 50 Hz/60 Hz)	DN 10 … 65 (¼" … 2½"): 12.5 Hz/15 Hz DN 80 … 100 (3", 4"): 6.25 Hz/7.5 Hz
Process connection	
Nominal size	DN 10 … DN 100 (3/8" … 4")
Process connection	Hygienic adapters available for: • Direct welding onto pipe • Clamp fitting • Threaded fitting
Rated operating conditions	
Ambient conditions	
Ambient temperature	
• Sensor	-40 … +100 °C (-40 … +212 °F)
• Ex sensor	-20 … +60 °C (-4 … +140 °F)
• Compact with transmitter MAG 5000/6000	-20 … +60 °C (-4 … +140 °F)
• Compact with transmitter MAG 6000 I	-20 … +60 °C (-4 … +140 °F)
• Compact with transmitter MAG 6000 I Ex	-10 … +60 °C (14 … 140 °F)
Temperature of medium	
MAG 1100 F (Ceramic)	-20 … +150 °C (-4 … +302 °F) Suitable for steam sterilization
MAG 1100 F (PFA)	-30 … +130 °C (-22 … +266 °F) Suitable for steam steralization at 150 °C (302 °F)
Temperature shock	
MAG 1100 F	
• Duration ≤ 1 min, followed by 10 min rest	• DN 10, 15, 25: Max. ΔT ≤ 80 °C/min (3/8", ½", 1": Max. ΔT ≤ 144 °F/min) • DN 40, 50, 65: Max. ΔT ≤ 70 °C/min (1½", 2", 2½": Max. ΔT ≤ 126 °F/min) • DN 80, 100: Max. ΔT ≤ 60 °C/min (3", 4": Max. ΔT ≤ 108 °F/min)
MAG 1100 F (PFA)	Max. ± 100 °C (212 °F) momentarily
Operating pressure	
MAG 1100 F (Ceramic)	DN 10 … 65: 40 bar (3/8" … 2½": 580 psi) DN 80: 25 bar (3": 363 psi) DN 100: 25 bar (4": 363 psi) Vacuum: 1 x 10^{-6} bar_{abs} (1.5 x 10^{-5} psi_{abs})
MAG 1100 F (PFA)	20 bar (290 psi) Vacuum: 0.02 bar_{abs} (0.3 psi_{abs}) DN 80 … DN 100: CO_2 pressure max. 7 bar (101.5 psi)
Mechanical load (vibration)	18 … 1 000 Hz random in x, y, z, directions for 2 hours according to EN 60068-2-36 Sensor: 3.17 g RMS Sensor with compact MAG 5000/6000 mounted transmitter: 3.17 grms Sensor with compact MAG 6000 I/MAG 6000 I Ex mounted transmitter: 1.14 grms For compact installation with the MAG 6000 I/MAG 6000 I Ex, transmitter to be supported to avoid tension on sensor part.
Enclosure rating	IP67 to EN 60529 (NEMA 4X), 1 mH_2O for 30 min
EMC	2014/30/EU

Design	
Weight	See Dimensional drawings
Material	
Enclosure	
• MAG 1100 F	Stainless steel AISI 316L/1.4404
Terminal box (remote version only)	
• Standard	Fibre glass reinforced polyamide
• Option	Stainless steel AISI 316/1.4436
• Ex ATEX (remote version only)	Stainless steel AISI 316/1.4436
Liner	
MAG 1100 F (Ceramic)	Aluminum oxide Al_2O_3 (ceramics)
MAG 1100 F (PFA)	Reinforced PFA (teflon) (not for Ex)
Electrodes	
MAG 1100 F (Ceramic)	Platinum with gold/Titanium brazing alloy
MAG 1100 F (PFA)	• DN 10 … 15 (3/8" … ½"): Hastelloy C276/2.4819 • DN 25 … 100 (1" … 4"): Hastelloy C22/2.4602
Cable entries	• Remote installation 2 x M20 or 2 x ½" NPT • Compact installation - MAG 5000/MAG 6000: 4 x M20 or 4 x ½" NPT - MAG 6000 I: 2 x M25 (for supply/output) - MAG 6000I Ex: 2 x M25 (for supply/output)
Certificates and approvals	
Calibration	
• Default calibration	Zero-point, 2 x 25 %, 2 x 90 %
Hazardous areas	
• MAG 1100 F (Ceramic)	
- Ex-sensor in compact or remote version with MAG 6000 I Ex	• ATEX, EAC Ex - Zone 1 Ex d e ia IIB T6 Gb • ATEX - Zone 21 Ex tD A21 IP67
- Standard sensor in compact or remote version with MAG MAG 5000/6000/6000 I Ex	• FM - NI Class I Div. 2 Groups A, B, C, D
• MAG 1100 F (PFA)	
- Standard sensor in compact or remote version with MAG MAG 5000/6000/6000 I Ex	• FM - NI Class I Div. 2 Groups A, B, C, D
Hygienic	
• MAG 1100 F (Ceramic)	• 3A (remote version with Polyamide terminal box)
• MAG 1100 F (PFA)	• 3A (remote version with Polyamide terminal box) • EHEDG (remote version with Polyamide terminal box, DN 25 ... 100 /1 ... 4") • Hygienic EC 1935:2004 European food contact material
Pressure equipment	PED - 2014/68/EU
Others	• EAC (Russia, Belarus, Kazakhstan) • KCC (South Korea)

© Siemens 2021

Technical specifications (continued)

Accessories

Weld-in adapter	
Adapter for welding onto dairy pipe, stainless steel 1.4404	Tri-Weld ISO 2037, DIN 11850, SMS 3008, BS 4825-1
• DN 10, 15, 25, 40, 50 and 65 (3/8", ½", 1", 1½", 2" and 2½")	PN 40 (600 psi)
• DN 8 and DN 100 (3" and 4")	PN 25 (350 psi)
Clamp adapter	Tri-Clamp, ISO 2852, DIN 32676, SMS 3016, BS 4825-3
DN 10, 15, 25, 40 and 50 (3/8", ½", 1", 1½" and 2")	PN 16 (200 psi)
DN 65, 80 and 100 (2½", 3" and 4")	PN 10 (150 psi)
Thread adapter	
DIN 11851	
• DN 10, 15, 25, and 40 (3/8", ½", 1", and 1½")	PN 40 (600 psi)
• DN 50, 65, 80 and 100 (2", 2½", 3" and 4")	PN 25 (350 psi)
ISO 2853, BS 4825-4	
• DN 10, 15, 25, 40, 50, 65 and 80 (3/8", ½", 1", 1½", 2", 2½" and 3")	PN 16 (200 psi)
SMS 1145	
• DN 25, 40, 50, 65 and 80 (1", 1½", 2", 2½" and 3")	PN 6 (80 psi)
Design	
Material	
Adapter	Stainless steel AISI 316/1.4436
Gasket	
• MAG 1100 F (Ceramic)	FKM/FPM with stainless steel insert (AISI 304/1.4301) (-20 … +150 °C (-4 … +302 °F))
	EPDM (-20 … +150 °C (-4 … +302 °F))
• MAG 1100 F (PFA)	EPDM (-20 … +150 °C (-4 … +302 °F))
	NBR (-20 … +100 °C (-4 … +212 °F))

Note:

When combined sensor and adapter, the operating pressure is the lower rated of the pair.

Selection and ordering data

	Article No.
Sensor SITRANS FM MAG 1100 F ↗	**7ME6140-**
↗ Click on the Article No. for the online configuration in the PIA Life Cycle Portal.	
Diameter	
DN 10 (3/8“)	1 R
DN 15 (½“)	1 V
DN 25 (1“)	2 D
DN 40 (1½“)	2 R
DN 50 (2“)	2 Y
DN 65 (2½“)	3 F
DN 80 (3“)	3 M
DN 100 (4“)	3 T
Process connections	
None (not suitable for 3A approval)	A
Weld in	
DIN 11850	B
ISO 2037 (SMS 3008)	C
Tri-Weld/BS 4825-1	D
Clamp type	
DIN 32676	G
ISO 2852 (SMS 3016)	H
Tri-Clamp/BS 4825-3	J
Threaded type	
DIN 11851	M
SMS 1145[1)]	N
Liner material	
PFA	1
Ceramic	2
Gasket material[1)]	
EPDM flat gasket (3A)	0
FPM/FKM (3A) (only with ceramic liner)	2
EPDM-P gasket (only for PFA) (EHEDG, 3A)	3
Electrode material	
Hastelloy C (only with PFA liner)	1
Platinum (only with ceramic liner)	2
Transmitter	
Standard sensor for remote transmitter (order transmitter separately), 3A approved	A
Ex sensor for remote transmitter (order transmitter separately) 3A approved	B
MAG 6000 I, Alu.18 ... 90 V DC, 115 ... 230 V AC	C
MAG 6000 I, Aluminum 18 ... 30 V DC, Ex	D
MAG 6000 I, Aluminum 115 ... 230 V AC, Ex	E
MAG 6000, Polyamide, 11 ... 30 V DC/11 ... 24 V AC	H
MAG 6000, Polyamide, 115 ... 230 V AC	J
MAG 5000, Polyamide, 11 ... 30 V DC/11 ... 24 V AC	K
MAG 5000, Polyamide, 115 ... 230 V AC	L

© Siemens 2021

Selection and ordering data

	Article No.
Sensor SITRANS FM MAG 1100 F ↗	**7ME6140-** ■■■■■■-■■■■
↗ Click on the Article No. for the online configuration in the PIA Life Cycle Portal.	
Communication	
No communication, add-on possible	**A**
HART	**B**
PROFIBUS PA Profile 3 (only MAG 6000/MAG 6000 I)	**F**
PROFIBUS DP Profile 3 (not for Ex) (only MAG 6000/MAG 6000 I)	**G**
Modbus RTU/RS 485 (not for Ex) (only MAG 6000/MAG 6000 I)	**E**
FOUNDATION Fieldbus H1 (only MAG 6000/MAG 6000 I)	**J**
Cable glands/terminal box	
Metric: Polyamide terminal box or MAG 6000 I compact	**1**
½" NPT: Polyamide terminal box or MAG 6000 I compact	**2**
Metric: Stainless steel terminal box	**3**
½" NPT: Stainless steel terminal box	**4**

1) SMS 1145 standard is not approved by 3A

Additional information	Order code
Please add "**-Z**" to Article No. and specify Order code(s) and plain text.	
Certificates	
• Pressure test certificate according to EN 10204-3.1	**C01**
• Material certificate according to EN 10204-3.1	**C12**
• Factory certificate according to EN 10204-2.2	**C14**
• Factory certificate according to EN 10204-2.1	**C15**
Terminal blocks	
• Factory mounted terminal blocks	**N02**
Tag name plate, stainless steel (specify in plain text)	**Y17**
Tag name plate, plastic (self adhesive)	**Y18**
Customer-specific transmitter setting	**Y20**
Factory mounted sensor cables	
• Sensor cables wired (specify Article No. for sensor cables and order cables separately)	**Y40**
• Sensor cables wired and IP68 sealing (specify Article No. for sensor cables and order cables separately)	**Y41**
Additional calibrations	
• Matched-pair calibration	**On request**[1]
• Accredited matched-pair calibration acc. to ISO/IEC 17025: 2005	**On request**[1]
• Customer-specified calibration up to 10 points	**On request**[1]
• Customer-witnessed calibration Any of above calibration	**On request**[1]

1) Product Variation Request (PVR)

Operating instructions for SITRANS FM MAG 1100 F

Description	Article No.
• English	**A5E02435647**

All literature is available to download for free, in a range of languages, at
https://www.siemens.com/processinstrumentation/documentation

Accessories

Description	Article No.	
Potting kit for IP68/ NEMA 6P sealing of sensor junction box	**FDK:085U0220**	

© Siemens 2021

3

Selection and ordering data — Article No.

Accessories for MAG 1100 F sensor

Weld-in connection fittings for use with P gaskets (Stainless steel)

Material: AISI 316L (1.4404)
Only for liner PFA
2 pcs. fittings
2 pcs. clamps (to join flow sensor and fitting),
P gaskets not included

DIN 11850[1)]

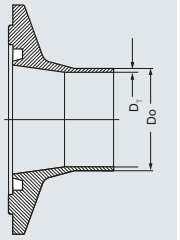

Adapter DN (mm)	D_o (mm)	D_T (mm)	Sensor DN (mm)	Article No.
10[2)]	13	1.5	10	**A5E02054630**
15[2)]	19	1.5	15	**A5E02054633**
20	23	1.5	15	**A5E02054634**
25	29	1.5	25	**A5E02054635**
32	35	1.5	25	**A5E02054637**
40	41	1.5	40	**A5E02054638**
50	53	1.5	50	**A5E02054640**
65	70	2.0	65	**A5E02054643**
80	85	2.0	80	**A5E02054644**
100	104	2.0	100	**A5E02054646**

ISO 2037[1)]

Adapter DN (mm)	D_o (mm)	D_T (mm)	Sensor DN (mm)	Article No.
12.7	12.7	1.0	10	**A5E03727946**
17.2	17.2	1.0	15	**A5E03728098**
25	25	1.6	25	**A5E02196073**
33	33.7	1.6	25	**A5E02196074**
38	38	1.6	40	**A5E02196075**
40	40	1.6	40	**A5E02196076**
51	51	1.6	50	**A5E02196077**
63.5	63.5	1.6	65	**A5E02196078**
76.1	76.1	1.6	80	**A5E02196080**
101.6	101.6	2.0	100	**A5E02196082**

Tri-Weld (BS 4825-1)[1)]

Adapter DN (mm)	D_o (mm)	D_T (mm)	Sensor DN (mm)	Article No.
12.7	12.7	1.2	10	**A5E02199113**
19.05	19.05	1.2	15	**A5E02199114**
25.4	25.4	1.6	25	**A5E02199115**
38.1	38.1	1.6	40	**A5E02199116**
50.8	50.8	1.6	50	**A5E02199117**
63.5	63.5	1.6	65	**A5E02199118**
76.2	76.2	1.6	80	**A5E02199119**
101.6	101.6	2.0	100	**A5E02199120**

Clamp-type connection fittings for use with P gaskets (Stainless steel)

Material: AISI 316L (1.4404)
Only for liner PFA
2 pcs. fittings
2 pcs. clamps (to join flow sensor and fitting),
P gaskets not included

DIN 32676[1)]

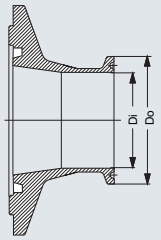

Adapter DN (mm)	D_o (mm)	D_i (mm)	Sensor DN (mm)	Article No.
10	34	10	10	**A5E02211143**
15	34	16	15	**A5E02211144**
25	50.5	22.6	25	**A5E02211146**
40	50.5	38	40	**A5E02211147**
50	64	50	50	**A5E02211148**
65	91	66	65	**A5E02211151**
80	106	81	80	**A5E02211152**
100	119	100	100	**A5E02211153**

ISO 2852[1)]

Adapter DN (mm)	D_o (mm)	D_i (mm)	Sensor DN (mm)	Article No.
25	50.5	22.6	25	**A5E02213581**
33.7	50.5	31.3	25	**A5E02213582**
38	50.5	35.6	40	**A5E02213583**
51	64	48.6	50	**A5E02213584**
63.5	77.5	60.3	65	**A5E02213585**
76.1	91	72.9	80	**A5E02213586**
101.6	119	97.6	100	**A5E02213587**

Tri-Clamp (BS 4825-3)[1)]

Adapter DN (mm)	D_o (mm)	D_i (mm)	Sensor DN (mm)	Article No.
12.7	25.4	9.5	10	**A5E02213596**
19.05	25.4	15.85	15	**A5E02213597**
25.4	50.5	22.2	25	**A5E02213598**
38.1	50.5	34.9	40	**A5E02213599**
50.8	64	47.6	50	**A5E02213600**
63.5	77.5	60.3	65	**A5E02213601**
76.2	91	73	80	**A5E02213602**
101.6	119	97.6	100	**A5E02213603**

D_o: Outer diameter
D_i: Inner diameter
1) Suitable for EHEDG
2) Not suitable for EHEDG

© Siemens 2021

Selection and ordering data

Article No.

Threaded type connection fittings for use with P gaskets (Stainless steel)

Material: AISI 316L (1.4404)
Only for liner PFA
2 pcs. fittings
2 pcs. clamps (to join flow sensor and fitting),
P gaskets not included

DIN 11851[1)]

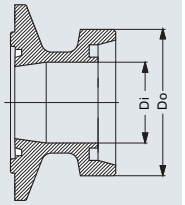

Adapter DN (mm)	D_o (mm)	D_T (mm)	Sensor DN (mm)	Article No.
10	28	10	10	**A5E02218293**
15	34	16	15	**A5E02218294**
20	44	20	15	**A5E02218295**
25	52	26	25	**A5E02218296**
32	58	32	25	**A5E02218297**
40	65	38	40	**A5E02218298**
50	78	50	50	**A5E02218299**
65	95	66	65	**A5E02218300**
80	110	81	80	**A5E02218301**
100	130	100	100	**A5E02218302**

SMS 1145[1)]

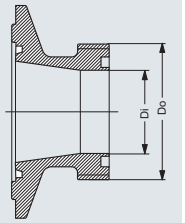

Adapter DN (mm)	D_o (mm)	D_i (mm)	Sensor DN (mm)	Article No.
25	40	22.6	25	**A5E02218310**
38	60	35.6	40	**A5E02218312**
51	70	48.6	50	**A5E02218313**
63.5	85	60.3	65	**A5E02218314**
76	98	72	65	**A5E02218315**

D_o: Outer diameter
D_i: Inner diameter
1) Suitable for EHEDG

Weld-in connection fittings for use with flat gaskets (Stainless steel)

Material: AISI 316L (1.4404)
For liner PFA and ceramic
2 pcs. fittings
2 pcs. clamps (to join flow sensor and fitting),
Flat gaskets not included

DIN 11850[1)]

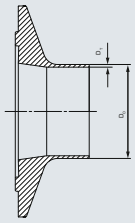

Adapter DN (mm)	D_o (mm)	D_T (mm)	Sensor DN (mm)	Article No.
10	13	1.5	10	**FDK:083G2116**
15	19	1.5	15	**FDK:083G2117**
20	23	1.5	15	**FDK:083G2118**
25	29	1.5	25	**FDK:083G2119**
32	35	1.5	25	**FDK:083G2120**
40	41	1.5	40	**FDK:083G2121**
50	53	1.5	50	**FDK:083G2122**
65	70	2.0	65	**FDK:083G2123**
80	85	2.0	80	**FDK:083G2124**
100	104	2.0	100	**FDK:083G2125**

ISO 2037[1)]

Adapter DN (mm)	D_o (mm)	D_T (mm)	Sensor DN (mm)	Article No.
12.7	12.7	1.0	10	**A5E03720273**
17.2	17.2	1.0	15	**FDK:083G2107**
25	25.6	1.6	25	**FDK:083G2109**
33.7	33.7	1.6	25	**FDK:083G2100**
38	38	1.6	40	**FDK:083G2111**
40	40	1.6	40	**FDK:083G2101**
51	51	1.6	50	**FDK:083G2112**
63.5	63.5	1.6	65	**FDK:083G2113**
76.1	76.1	1.6	80	**FDK:083G2114**
101.6	101.6	2.0	100	**FDK:083G2115**
114.3	118.3	2.0	100	**FDK:083G2105**

Tri-Weld (BS 4825-1)[1)]

Adapter DN (mm)	D_o (mm)	D_T (mm)	Sensor DN (mm)	Article No.
12.7	12.7	1.2	10	**FDK:083G2276**
19.05	19.05	1.2	15	**FDK:083G2277**
25.4	25.4	1.6	25	**FDK:083G2279**
38	38.1	1.6	40	**FDK:083G2281**
50.8	50.8	1.6	50	**FDK:083G2282**
63.5	63.5	1.6	65	**FDK:083G2283**
76.2	76.2	1.6	80	**FDK:083G2284**
101.6	101.6	2.0	100	**FDK:083G2285**

© Siemens 2021

3

Selection and ordering data

Clamp-type connection fittings for use with flat gaskets (Stainless steel)

Material: AISI 316L (1.4404)
For liner PFA and ceramic
2 pcs. fittings
2 pcs. clamps (to join flow sensor and fitting),
Flat gaskets not included

DIN 32676[1]

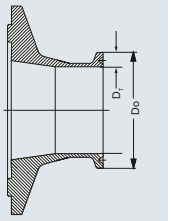

Adapter DN (mm)	D_o (mm)	D_T (mm)	Sensor DN (mm)	Article No.
10	34	10	10	**FDK:083G2186**
15	34	16	15	**FDK:083G2187**
25	50.5	26	25	**FDK:083G2179**
40	50.5	38	40	**FDK:083G2181**
50	64	50	50	**FDK:083G2182**
65	91	66	65	**FDK:083G2183**
80	106	81	80	**FDK:083G2184**
100	119	100	100	**FDK:083G2185**

ISO 2852[1]

Adapter DN (mm)	D_o (mm)	D_T (mm)	Sensor DN (mm)	Article No.
25	50.5	22.6	25	**FDK:083G2189**
33.7	50.5	31.3	25	**FDK:083G2190**
38	50.5	35.6	40	**FDK:083G2191**
51	64	48.6	50	**FDK:083G2192**
63.5	77.5	60.3	65	**FDK:083G2193**
76.1	91	72.9	80	**FDK:083G2194**
101.6	119	97.6	100	**FDK:083G2195**

Tri-Clamp (BS 4825-3)[1]

Adapter DN (mm)	D_o (mm)	D_T (mm)	Sensor DN (mm)	Article No.
12.7	25.4	9.5	10	**FDK:083G2286**
19.05	25.4	15.85	15	**FDK:083G2287**
25.4	50.5	22.2	25	**FDK:083G2289**
38.1	50.5	34.9	40	**FDK:083G2291**
50.8	64	47.6	50	**FDK:083G2292**
63.5	77.5	60.3	65	**FDK:083G2293**
76.2	91	73	80	**FDK:083G2294**
101.6	119	97.6	100	**FDK:083G2295**

[1] D_o: Outer diameter
[2] D_i: Inner diameter
[3] [1] Suitable for 3A

Threaded type connection fittings for use with flat gaskets (Stainless steel)

Material: AISI 316L (1.4404)
For liner PFA and ceramic
2 pcs. fittings
2 pcs. clamps (to join flow sensor and fitting),
Flat gaskets not included

DIN 11851[1]

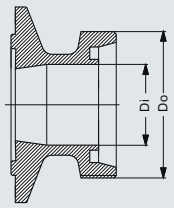

Adapter DN (mm)	D_o (mm)	D_i (mm)	Sensor DN (mm)	Article No.
10	28	10	10	**FDK:083G2156**
15	34	16	15	**FDK:083G2157**
20	44	20	15	**FDK:083G2158**
25	52	26	25	**FDK:083G2159**
32	58	32	25	**FDK:083G2160**
40	65	38	40	**FDK:083G2161**
50	78	50	50	**FDK:083G2162**
65	95	66	65	**FDK:083G2163**
80	110	81	80	**FDK:083G2164**
100	130	100	100	**FDK:083G2165**

ISO 2853[1]

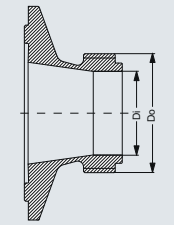

Adapter DN (mm)	D_o (mm)	D_i (mm)	Sensor DN (mm)	Article No.
25	37	22.6	25	**FDK:083G2149**
38	51	35.6	40	**FDK:083G2151**
51	64	48.6	50	**FDK:083G2152**
63.5	78	60.3	65	**FDK:083G2153**
76.1	91	72.9	80	**FDK:083G2154**

BS 4825-4[1]

Adapter DN (mm)	D_o (mm)	D_i (mm)	Sensor DN (mm)	Article No.
101.6	126	97.6	100	**FDK:083G2145**

SMS 1145[2]

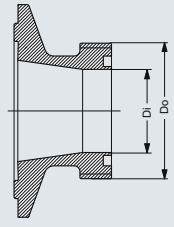

Adapter DN (mm)	D_o (mm)	D_i (mm)	Sensor DN (mm)	Article No.
25	40	22.6	25	**FDK:083G2139**
38	60	35.6	40	**FDK:083G2141**
51	70	48.6	50	**FDK:083G2142**
63.5	85	60.3	65	**FDK:083G2143**
76	98	72	65	**FDK:083G2144**

D_o: Outer diameter
D_i: Inner diameter
[1] Suitable for 3A
[2] Not suitable for 3A

© Siemens 2021

Selection and ordering data	**Article No.**
Spare parts for MAG 1100 F sensor	
Gaskets	
(delivered in pairs, to be placed between flow sensor and adapter)	
MAG 1100 F (PFA) - P gaskets	
Rubber: EPDM	
• DN 10	**A5E02055286**
• DN 15	**A5E02055287**
• DN 25	**A5E02055290**
• DN 40	**A5E02055291**
• DN 50	**A5E02055292**
• DN 65	**A5E02055293**
• DN 80	**A5E02055295**
• DN 100	**A5E02055297**
MAG 1100 F (ceramic) - Flat gaskets	
Rubber: FKM/FPM	
• DN 10	**A5E00915707**
• DN 15	**A5E00915764**
• DN 25	**A5E00915771**
• DN 40	**A5E00915773**
• DN 50	**A5E00915775**
• DN 65	**A5E00915780**
• DN 80	**A5E00915782**
• DN 100	**A5E00915784**
MAG 1100 F (PFA, ceramic) - Flat gaskets	
Rubber: EPDM	
• DN 10	**FDK:083G2206**
• DN 15	**FDK:083G2207**
• DN 25	**FDK:083G2209**
• DN 40	**FDK:083G2211**
• DN 50	**FDK:083G2212**
• DN 65	**FDK:083G2213**
• DN 80	**FDK:083G2214**
• DN 100	**FDK:083G2215**
Rubber: NBR	
• DN 10	**FDK:083G2216**
• DN 15	**FDK:083G2217**
• DN 25	**FDK:083G2219**
• DN 40	**FDK:083G2221**
• DN 50	**FDK:083G2222**
• DN 65	**FDK:083G2223**
• DN 80	**FDK:083G2224**
• DN 100	**FDK:083G2225**

© Siemens 2021

3

Dimensional drawings

Sensor MAG 1100 F compact/remote

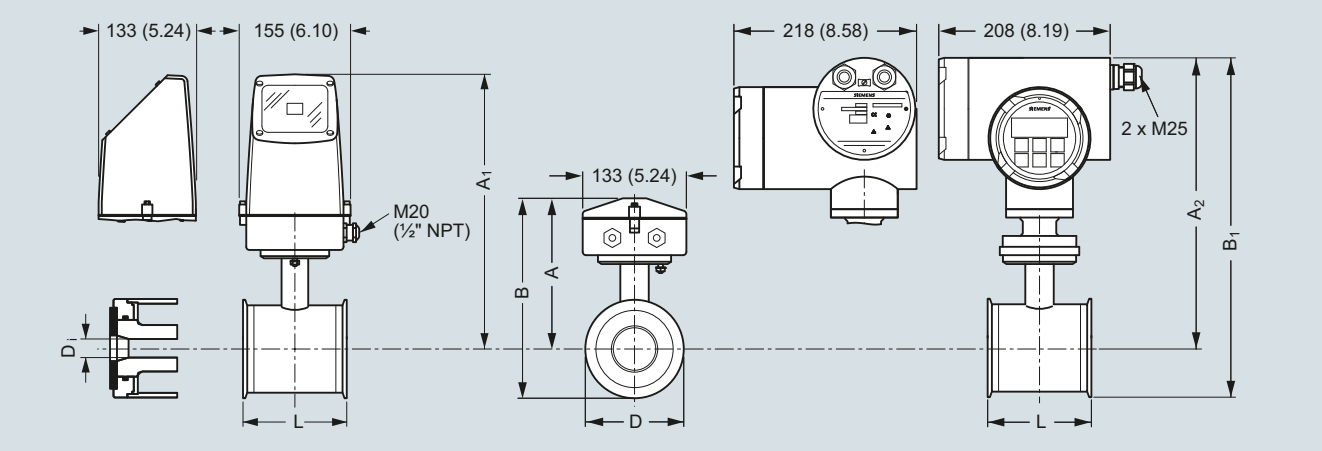

Dimensions in mm (inch)

Important note:
For compact installation with MAG 6000 I/Ex - Supports the transmitter to avoid tension on the sensor part.

Size DN	L [mm]	A [mm]	A_1 3) [mm]	B 2) [mm]	B_1 [mm]	D [mm]	D_i (Al_2O_3) [mm]	D_i PFA [mm]	Weight 1) [kg]
10	64	161	315	193.7	344.7	64.0	10	10	2.2
15	64	161	315	193.7	344.7	64.0	15	16	2.2
25	79	169	323	207.5	359.0	77.5	25	26	2.7
40	94	179	333	228.0	379.0	91.0	40	38	3.4
50	104	188	342	247.7	398.7	119.0	50	50	4.2
65	131	197.5	351	262.6	413.6	130.0	65	66	5.5
80	156	204	357	281.0	432.0	155.0	80	81	7.0
100	186	217	370	308.0	459.0	183.0	100	100	10.0

Size [inch]	L [inch]	A [inch]	A_1 3) [inch]	B 2) [inch]	B_1 [inch]	D [inch]	D_i (Al_2O_3) [inch]	D_i PFA [inch]	Weight 1) [lb]
3/8	2.52	6.34	12.40	7.62	13.57	2.52	0.39	0.39	4.8
½	2.52	6.34	12.40	7.62	13.57	2.52	0.59	0.63	4.8
1	3.11	6.66	12.72	8.17	14.13	3.05	0.98	1.02	4.9
1½	3.70	7.05	13.11	8.98	14.92	3.58	1.57	1.50	7.5
2	4.09	7.40	13.47	9.75	15.70	4.68	1.97	1.97	9.2
2½	5.16	7.78	13.82	10.34	16.28	5.12	2.56	2.60	12.0
3	6.14	8.03	14.06	11.06	17.01	6.10	3.15	3.19	15.0
4	7.32	8.54	14.57	12.13	18.07	7.20	3.94	3.94	22.0

1) With transmitter MAG 5000 or MAG 6000 compact, weight is increased by approximately 0.8 kg (1.8 lb).
With MAG 6000 I weight is increased with 5.5 kg (12.1 lbs)

2) 14.5 mm (0.571") shorter when the stainless steel terminal box is used (always Ex version).

3) A_2 is 3 mm (0.12") shorter than A_1

© Siemens 2021

Dimensional drawings (continued)

Sensor MAG 1100 F compact/separate – built-in length

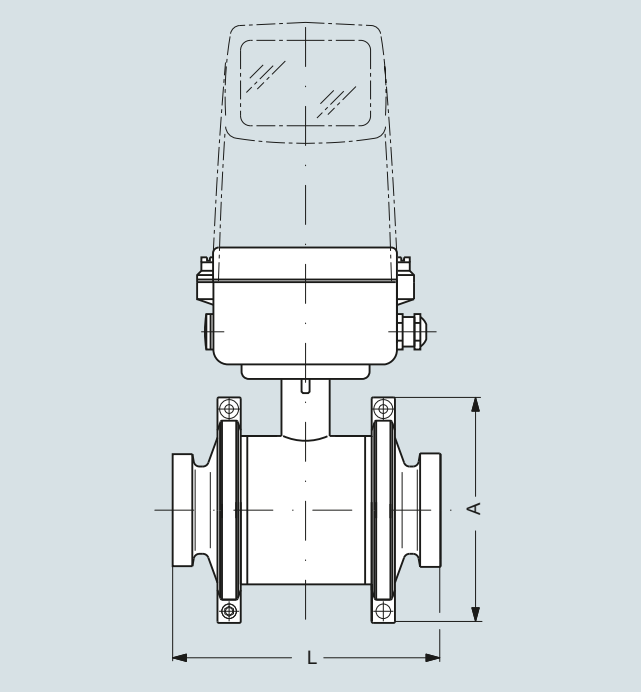

Size		A		L [1]	
DN	Inch	[mm]	[inch]	[mm]	[inch]
10	3/8	99	3.90	146	5.75
15	½	99	3.90	146	5.75
25	1	113	4.45	161	6.34
40	1½	126	4.96	176	6.93
50	2	154	6.06	186	7.32
65	2½	165	6.50	223	8.78
80	3	200	7.87	258	10.16
100	4	225	8.86	288	11.34

[1] The total built-in length “L” is independent of the adapter type selected.

© Siemens 2021

MAG 3100 and MAG 3100 HT

Overview



The SITRANS FM MAG 3100 is an electromagnetic flow sensor in a large variety that meets the demands of almost every flow application.

Benefits

- Wide range of sizes: DN 15 to DN 2000 (½" to 78")
- The flexible design is for all applications not covered by the standard industry-specific sensors: MAG 1100, MAG 1100 F, MAG 3100 P and MAG 5100 W
- Wide pressure range: PN 6 to PN 100
- ANSI Class 150/300, AS 2129, AS 4087, JIS K10 and K20. On request up to 690 bar (10 000 psi)
- Wide range of electrode and liner material to fit even the most extreme process media
- Fully welded construction provides a ruggedness that suits the toughest applications and environments.
- Easy commissioning, the SENSORPROM unit automatically updates settings.
- Designed to allow patented SITRANS FM in-situ verification using the SENSORPROM fingerprints.

Application

The main applications of the SITRANS FM electromagnetic flow sensors can be found in the following fields:

- Process industry
- Chemical industry
- Steel industry
- Mining
- Utility
- Power generation and distribution
- Oil and gas/HPI
- Water and waste water

Design

- Compact or remote mounting possible
- Easy “plug & play” field changeability of transmitter
- ATEX and FM/CSA versions
- High temperature sensor for applications with temperatures up to 180 °C (356 °F)
- Meets EEC directives: PED, 2014/68/EU pressure directive for EN 1092-1 flanges
- Built-in length according to ISO 20456, the standard includes sizes up to DN 400
- Onsite or factory upgrade to IP68/NEMA 6P of a standard sensor.

Mode of operation

The flow measuring principle is based on Faraday’s law of electromagnetic induction according to which the sensor converts the flow into an electrical voltage proportional to the velocity of the flow.

Integration

The complete flowmeter consists of a flow sensor and an associated transmitter MAG 5000, 6000 and 6000 I.

The flexible communication concept USM II simplifies integration and update to a variety of fieldbus systems such as HART, FOUNDATION Fieldbus H1, DeviceNet, PROFIBUS DP and PA, Modbus RTU/RS485.

© Siemens 2021

Integration (continued)

Pressure/temperature curve; material AISI 316L/1.4404 AS 2129, Class E

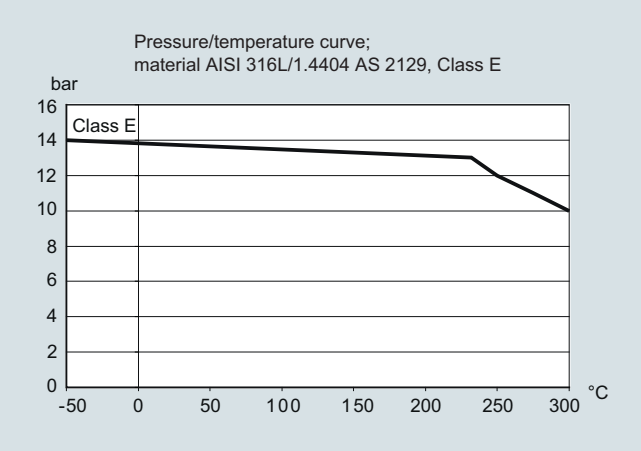

Pressure/temperature curve to EN (DIN) flanges AISI 304

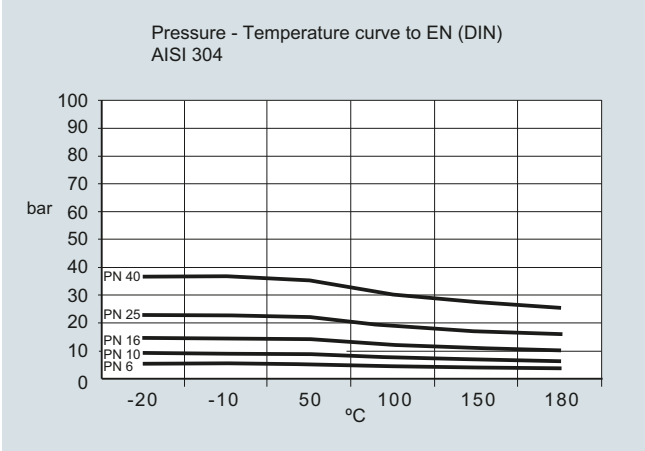

Pressure/temperature curve - JIS 2200

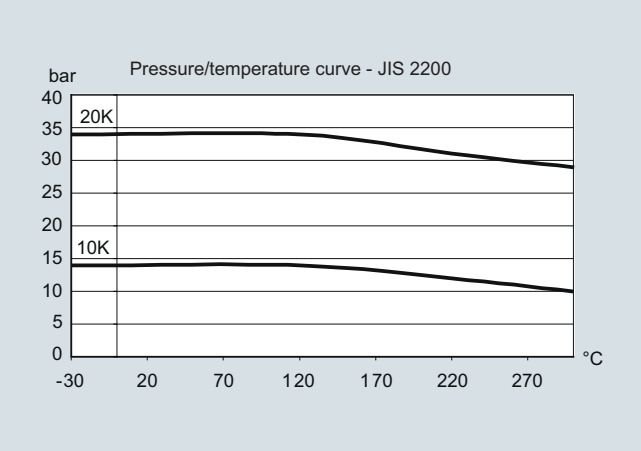

Pressure/temperature curve to EN (DIN) flanges AISI 316

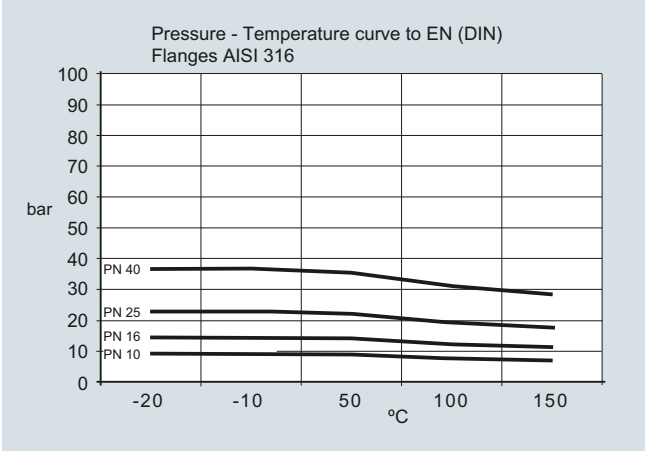

Pressure/temperature curve to EN (DIN) flanges, material A 105 carbon steel

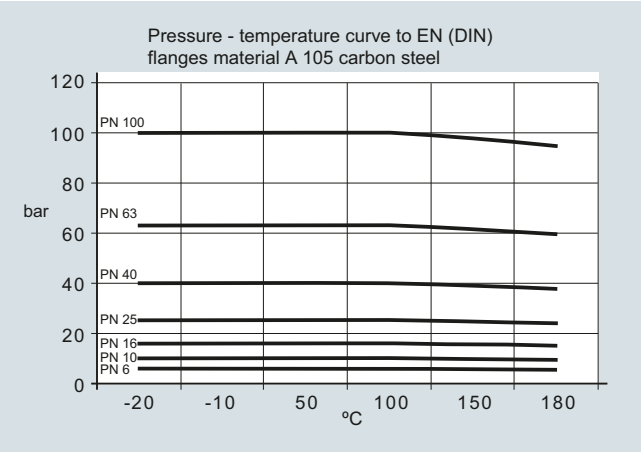

Pressure/temperature curve to ANSI B16.5 flanges

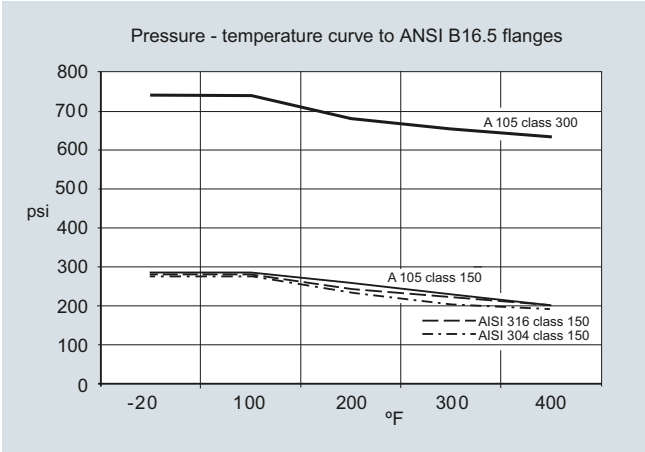

Note: The pressure-temperature curves only assist in the selection of a system. No responsibility is taken for the correctness of the information. For further information on PED standard see Pressure Equipment Directive in Appendix (chapter 10).

© Siemens 2021

Technical specifications

Version	MAG 3100	MAG 3100 HT (High Temperature)
Product characteristic	Flexible product program	Flexible product program
Nominal size	DN 15 … DN 2000 (½" … 78")	DN 15 … DN 300 (½" … 12")
Measuring principle	Electromagnetic induction	Electromagnetic induction
Excitation frequency (Mains supply: 50 Hz/60 Hz)	• DN 15 … 65 (½" … 2½"): 12.5 Hz/15 Hz	• DN 15 … 65 (½" … 2½"): 12.5 Hz/15 Hz
	• DN 80 … 150 (3" … 6"): 6.25 Hz/7.5 Hz	• DN 80 … 150 (3" … 6"): 6.25 Hz/7.5 Hz
	• DN 200 … 1200 (8" … 48"): 3.125 Hz/3.75 Hz	• DN 200 … 300 (8" … 12"): 3.125 Hz/3.75 Hz
	• DN 1400 … 2000 (54" … 78"): 1.5625 Hz/1.875 Hz	
Process connection		
Flanges	EN 1092-1, raised face[1)] (EN 1092-1, DIN 2501 & BS 4504 have the same mating dimensions)	EN 1092-1, raised face (EN 1092-1, DIN 2501 & BS 4504 have the same mating dimensions)
	• DN 65 … 2000 (2½" … 78"): PN 6 (87 psi)	• DN 15 … 300 (½" … 12"): PN 40 (580 psi)
	• DN 200 … 2000 (8" … 78"): PN 10 (145 psi)	• DN 65 … 300 (2½" … 12"): PN 16 (232 psi)
	• DN 65 … 2000 (2½" … 78"): PN 16 (232 psi)	• DN 200 … 300 (8" … 12"): PN 10 (145 psi)
	• DN 200 … 600 (8" … 24"): PN 25 (362 psi)	• DN 200 … 300 (8" … 12"): PN 25 (362 psi)
	• DN 15 … 600 (½" … 24"): PN 40 (580 psi)	
	• DN 50 … 300 (2" … 12"): PN 63 (913 psi)	
	• DN 25 … 300 (1" … 12"): PN 100 (1450 psi)	
	ANSI B16.5 (~BS 1560), raised face:	ANSI B16.5 (~BS 1560), raised face:
	• ½" … 24": Class 150 (20 bar (290 psi))	• ½" … 12": Class 150 (20 bar (290 psi))
	• ½" … 24": Class 300 (50 bar (725 psi))	• ½" … 12": Class 300 (50 bar (725 psi))
	• ½" … 18": Class 600 (100 bar (1450 psi))	
	AWWA C-207, flat face 28" … 78": Class D (10 bar)	
	AS 2129, raised face ½" … 48": Table E	AS 2129, raised face ½" … 12": Table E
	AS 4087, raised face:	
	• PN 16 (DN 50 … 1200, 16 bar (232 psi))	
	• PN 21 (DN 50 … 600, 21 bar (304 psi))	
	• PN 35 (DN 50 … 600, 35 bar (508 psi))	
	JIS B 2220:2004	
	• K10 (1" … 24")	
	• K20 (1" … 24")	
	Other flanges and pressure ratings on request	Other flanges and pressure ratings on request
Rated operation conditions		
Ambient temperature (conditions also dependent on liner characteristiques)		
• Standard sensor	-40 … +100 °C (-40 … +212 °F)	-40 … +100 °C (-40 … +212 °F)
• Ex sensor	-20 … +60 °C (-4 … +140 °F)	For medium temperature up to 150 °C (302 °F): -20 … +60 °C (-4 … +140 °F)
		For medium temperature 150 … 180 °C (302 … 356 °F): -20 … +50 °C (-4 … +122 °F)
• Compact with transmitter		
- MAG 5000/6000	-20 … +60 °C (-4 … +140 °F)	-20 … +60 °C (-4 … +140 °F)
- MAG 6000 I	-20 … +60 °C (-4 … +140 °F)	-20 … +60 °C (-4 … +140 °F)
- MAG 6000 I Ex	-20 … +60 °C (-4 … +140 °F)	-20 … +60 °C (-4 … +140 °F)

© Siemens 2021

Technical specifications (continued)

Version	MAG 3100	MAG 3100 HT (High Temperature)
Operating pressure	• Softrubber 0.01 … 100 bar (0.15 … 1450 psi)	
[abs. bar] (maximum operating pressure decreases with increasing operating temperature and with stainless steel flanges)	• EPDM 0.01 … 40 bar (0.15 … 580 psi)	
	• Linatex 0.01 … 40 bar (0.15 ... 580 psi)	
	• Ebonite 0.01 … 100 bar (0.15 … 1450 psi)	
	• PTFE	• PTFE Teflon
	- DN ≤ 300 (≤ 12"): 0.3 … 50 bar (4 … 725 psi)	- DN 15 … 300 (½" … 12"): 0.3/0.6 … 50 bar (4/8 … 725 psi) (180 °C (356 °F). Factory mounted grounding rings type E in stainless steel and stainless steel terminal box. Can nly be used with remote transmitter.
	- 350 ≤ DN ≤ 600 (14"≤ DN ≤ 24"): 0.3 … 40 bar (4 … 580 psi)	
	• PFA	• PFA
	- DN 15 … 150 (½" … 6"): Vacuum 0.02 … 50 bar (0.29 … 725 psi)	- DN 15 … 150 (½" … 6"): Vacuum 0.02 … 50 bar (0.29 … 725 psi)
Enclosure rating	IP67 to EN 60529/NEMA 6P/10, 1 mH_2O for 30 min	IP67 to EN 60529/NEMA 4X/6, 1 mH_2O for 30 min
	Option: IP68 to EN 60529/NEMA 6P,10 mH_2O cont.	Option: IP68 to EN 60529/NEMA 6P,10 mH_2O cont.
Pressure drop at 3 m/s	As straight pipe	
Test pressure	1.5 x PN (where applicable)	
Mechanical load (vibration)	18 … 1000 Hz random in x, y, z, directions for 2 hours according to EN 60068-2-36	18 … 1000 Hz random in x, y, z, directions for 2 hours according to EN 60068-2-36
	Sensor: 3.17 g RMS	Sensor: 3.17 g RMS
	Sensor with compact MAG 5000/6000 mounted transmitter: 3.17 g RMS	Sensor with compact MAG 5000/6000 mounted transmitter: 3.17 g RMS
	Sensor with compact MAG 6000 I/6000 I Ex mounted transmitter: 1.14 g RMS	Sensor with compact MAG 6000 I/6000 I Ex mounted transmitter: 1.14 g RMS
Temperature of medium	• Soft rubber 0 … +70 °C (32 … 158 °F)	• PTFE -20 … +130 °C (-4 … +266 °F)
	• EPDM -10 … +70 °C (14 … 158 °F)	• PTFE -20 … +180 °C (-4 … +356 °F) Factory mounted grounding rings type E in stainless steel and stainless steel terminal box. Can only be used with remote transmitter.
	• Linatex (rubber) -40 … +70 °C (-40 … +158 °F) (for temperatures below -20 °C (-4 °F) AISI 304 or 316 flanges must be used)	• PFA -20 … +150 °C (-4 … +300 °F)
	• Ebonite 0 … 95 °C (32 … 203 °F)	
	• PTFE -20 … +100 °C (-4 … +212 °F)	
	• PFA -20 … +100 °C (-4 … +212 °F)	
EMC	2014/30/EU	2014/30/EU
Design		
Weight	See dimensional drawings	
Flange and housing material	Carbon steel ASTM A 105, with corrosion resistant coating of category C4 or C5 according to ISO 12944-2	Carbon steel ASTM A 105, with corrosion resistant coating of category C4 according to ISO 12944-2
	or	or
	Stainless steel AISI 304/1.4301flanges and carbon steel housing, with corrosion resistant coating of category C4 or C5 according to ISO 12944-2	Stainless steel AISI 304/1.4301 flanges and carbon steel housing, with corrosion resistant coating of category C4 according to ISO 12944-2
	or	or
	Stainless steel AISI 316L/1.4404 flanges and housing, polished	Stainless steel AISI 316L/1.4404 flanges and housing, polished
Measuring pipe material	Stainless steel AISI 304/1.4301	Stainless steel AISI 304/1.4301
Electrode material	• Stainless steel AISI 316Ti/1.4571	• Stainless steel AISI 316Ti/1.4571
	• Hastelloy C276/2.4819 (PFA: Hastelloy C22/2.4602)	• Hastelloy C276/2.4819 (PFA: Hastelloy C22/2.4602)
	• Platinum	• Platinum
	• Titanium	• Titanium
	• Tantalum	• Tantalum
	• Ceramic coated stainless steel	
	• Ceramic coated Hastelloy C	
Grounding electrode material	• Soft rubber, EPDM, Linatex, Ebonite: grounding electrodes built-in by default for stainless steel and Hastelloy C.	
	• PTFE: optional in Stainless steel, Hastelloy C, Titanium, Platinum or Tantalum	• PTFE: no grounding electrodes
	• PFA: optional in Hastelloy, Tantalum or Platinum	• PFA: optional in Hastelloy, Tantalum or Platinum
	• Ceramic coated stainless steel and Hastelloy C276: grounding electrodes built-in by default	

© Siemens 2021

3

Technical specifications (continued)

Version	MAG 3100	MAG 3100 HT (High Temperature)
Design (continued)		
Terminal box (remote version only)	• Standard fibre glass reinforced polyamide	• Standard fibre glass reinforced polyamide (max. 150 °C (302 °F))
	• Option Stainless steel AISI 316/1.4436	• Stainless steel AISI 316/1.4436
	• Ex Stainless steel AISI 316/1.4436	• Ex Stainless steel AISI 316/1.4436
Cable entries	• Remote installation 2 x M20 or 2 x ½" NPT	• Remote installation 2 x M20 or 2 x ½" NPT
	• Compact installation	
	• MAG 5000/MAG 6000: 4 x M20 or 4 x ½" NPT	
	• MAG 6000 I: 2 x M25 or 2 x ½" NPT (for supply/output)	
	• MAG 6000 I Ex: 2 x M25 or 2 x ½" NPT (for supply/output)	
Certificates and approvals		
Calibration		
• Default calibration	Zero-point, 2 x 25 % and 2 x 90 % (default)	Zero-point, 2 x 25 % and 2 x 90 %
• Special calibration	5-point calibration: 20%, 40%, 60%, 80%, 100% of factory Q_{max}	
	10-point calibration: ascending and descending at 20%, 40%, 60%, 80%, 100% of factory Q_{max}	
	Matched pair calibration: default, 5-point or 10-point	
Hazardous areas[2]		
• Ex-sensor in compact or remote version with MAG 6000 I Ex	• ATEX, FM, CSA, IECEx, EAC Ex, NEPSI - Zone 1 Ex d e ia IIC T6 Gb[4] - Zone 1 Ex e ia IIC T6 Gb[5] • ATEX, FM, CSA, IECEx - Zone 21 Ex tD A21 IP67 • FM - XP IS Class I Div. 1 Groups A, B, C, D[6] - DIP Class II+III Div. 1 Groups E, F, G[6]	• ATEX, FM, CSA, IECEx, EAC Ex, NEPSI - Zone 1 Ex d e ia IIC T6 Gb[4] - Zone 1 Ex e ia IIC T6 Gb[5] • ATEX, FM, CSA, IECEx - Zone 21 Ex tD A21 IP67 • FM - XP IS Class I Div. 1 Groups A, B, C, D[6] - DIP Class II+III Div. 1 Groups E, F, G[6]
• Standard sensor with/without MAG 5000/6000/6000 I	• FM - NI Class I Div. 2 Groups A, B, C, D - NI Class I Zone 2 Groups IIC	• FM - NI Class I Div. 2 Groups A, B, C, D - NI Class I Zone 2 Groups IIC
Drinking water	EPDM liner: • WRAS (WRc, BS690 cold water, GB) • NSF/ANSI Standard 617) (Cold water, US) • ACS listed (F) • DVGW W270 (D) • Belgaqua (B) • MCERTS (GB) (EPDM or PTFE lining with AISI 316 or Hastelloy electrodes)	
Pressure equipment	• PED conforming: All EN1092-1 flanges - 2014/68/EU[3] • CRN	• PED conforming: All EN1092-1 flanges - 2014/68/EU[3] • CRN
Others	• EAC (Russia, Belarus, Kzakhstan) • KCC (South Korea) • CMC/CPA (China)	• EAC (Russia, Belarus, Kzakhstan) • KCC (South Korea)

Technical specification for transmitter - please see section about transmitters.

1) PN 6-40: DN ≤ 600 type 01 (SORF); DN > 600 type 11 (WNRF); PN 63-100: type 11 (WNRF)

2) Not for sensors with 300 µm coating.

3) For sizes larger than 600 mm (24") in PN 16 PED conformity is available as a cost-added option. The basic unit will carry the LVD (Low Voltage Directive) and EMC approval. All products sold outside of EU and EFTA are excluded from the Pressure Equipment directive, also products sold into certain market sectors are excluded. These include

a) Meters used in networks for the supply, distribution and discharge of water.

b) Meters used in pipelines for the conveyance of any fluid from offshore to onshore.

c) Meters used in the extraction of petroleum or gas, including christmas tree and manifold equipment.

d) Any meter mounted on a ship or mobile offshore platform. For further information on the PED standard and requirements see Pressure Equipment Directive in Appendix (chapter 10).

4) In remote version with sensor size DN 15 ... DN 300 (½" ... 12")

5) In remote version with sensor size DN 350 ... DN 2000 (14" ... 48")

6) In compact version with sensor size DN 15 ... DN 300 (½" ... 12")

7) Has to be ordered with the meter. It is not possible to order the certificate afterwards.

© Siemens 2021

Selection and ordering data

Article No.

Sensor SITRANS FM MAG 3100 ↗	7ME6310-					-					Ord. code		
↗ Click on the Article No. for the online configuration in the PIA Life Cycle Portal.													
Diameter													
DN 15 (½“) (PTFE and PFA liner)	1	V											
DN 25 (1“)	2	D											
DN 32 (11/4“)	2	H											
DN 40 (1½“)	2	R											
DN 50 (2“)	2	Y											
DN 65 (2½“)	3	F											
DN 80 (3“)	3	M											
DN 100 (4“)	3	T											
DN 125 (5“)	4	B											
DN 150 (6“)	4	H											
DN 200 (8“)	4	P											
DN 250 (10“)	4	V											
DN 300 (12“)	5	D											
DN 350 (14“)	5	K											
DN 400 (16“)	5	R											
DN 450 (18“)	5	Y											
DN 500 (20“)	6	F											
DN 600 (24“)	6	P											
DN 700 (28“)	6	Y											
DN 750 (30“) (AWWA and AS 2129 only)	7	D											
DN 800 (32“)	7	H											
DN 900 (36“)	7	M											
DN 1000 (40“)	7	R											
DN 1050 (42“) (AWWA only)	7	U											
DN 1100 (44“) (AWWA only)	7	V											
DN 1200 (48“)	8	B											
DN 1400 (54“)	8	F											
DN 1500 (60“)	8	K											
DN 1600 (66“)	8	P											
DN 1800 (72“)	8	T											
DN 2000 (78“)	8	Y											
Flange norm and pressure rating													
EN 1092-1													
PN 6 (DN 65 ... 2000 (2½“ ... 78“))			A										
PN 10 (DN 200 ... 2000 (8“ ... 78“))			B										
PN 16 (DN 65 ... 1200 (2½“ ... 48“))			C										
PN 16, non-PED (DN 700 ... 2000 (28“ ... 78“))			D										
PN 25 (DN 200 ... 600 (8“ ... 24“))			E										
PN 40 (DN 15 ... 600 (½“ ... 24“))			F										
PN 63 (DN 50 ... 300 (2“ ... 12“))			G										
PN 100 (DN 25 ... 300 (1“ ... 12“))			H										
ANSI B16.5													
Class 150 (½“ ... 24“)			J										
Class 300 (½“ ... 24“)			K										
Class 600 (½“ ... 18“)			U										
AWWA C-207													
Class D (28“ ... 78“)			L										
AS													
2129, table E			M										
4087, PN 16 (DN 50 ... 1200 (2“ ... 48“)) (Not PTFE and PFA)			N										
4087, PN 21 (DN 50 ... 600 (2“ ... 24“)) (Not PTFE and PFA)			P										
4087, PN 35 (DN 50 ... 600 (2“ ... 24“)) (Not PTFE and PFA)			Q										
JIS B 2220:2004													
K10 (1" ... 24")			R										
K20 (1" ... 24")			S										

Article No.

Sensor SITRANS FM MAG 3100	7ME6310-					-					Ord. code		
Flange material and coating													
Carbon steel flanges ASTM A 105, corrosion-resistant coating of category C4				1									
Stainless steel flanges, AISI 304/1.4301, corrosion-resistant coating of category C4				2									
Stainless steel flanges and sensor body, AISI 316L/1.4404, polished				3									
Carbon steel flanges ASTM A 105, 300 mm corrosion-resistant coating of category C5				4									
Stainless steel flanges, AISI 304/1.4301, 300 mm corrosion-resistant coating of category C5				5									
Liner material													
Soft rubber					1								
EPDM					2								
PTFE (DN ≤ 300, PN ≤ 50 bar / ≤ 12“, PN ≤ 725 psi), PTFE (350 ≤ DN ≤ 600, PN ≤ 40 bar / 14“ ≤ DN ≤ 24“, PN ≤ 580 psi)					3								
Ebonite					4								
Linatex (PN ≤ 40 bar (580 psi) DN ≤ 600 (24“))					5								
PFA (DN 15 ... 150 (½" ... 6")) (PN ≤ 40 bar (580 psi))					7								
Electrode material													
(Grounding electrodes not for pressure rating PN 100)													
AISI 316Ti/1.4571 (not for PFA)						1							
Hastelloy C276/2.4819 (PFA liner: Hastelloy C22/2.4602)						2							
Platinum (DN ≤ 300 (12")) (not for Ebonite)						3							
Titanium (not for PFA) (DN ≤ 600/24")						4							
Tantalum (DN ≤ 600/24") (not for Ebonite)						5							
Hastelloy C incl. grounding electrodes (only PFA and PTFE)						6							
Platinum incl. grounding electrodes (only PFA and PTFE)						7							
Tantalum incl. grounding electrodes (only PFA and PTFE)						8							
Ceramic coated stainless steel						9					N	0	A
Ceramic coated Hastelloy C						9					N	0	B
AISI 316Ti incl. grounding electrodes (only PTFE)						9					N	0	C
Titanium incl. grounding electrodes (only PTFE)						9					N	0	D
Transmitter													
Standard sensor for remote transmitter (order transmitter separately)							A						
Ex sensor for remote transmitter (order transmitter separately)							B						
MAG 6000 I, Alu.18 ... 90 V DC, 115 ... 230 V AC							C						
MAG 6000 I Alu. 18 ... 30 V DC, Ex							D						
MAG 6000 I Alu. 115 ... 230 V, Ex							E						
MAG 6000 Polyamide, 11… 30 V DC / 11…24 V AC							H						
MAG 6000, Polyamide, 115 ... 230 V AC							J						
MAG 5000, Polyamide, 11… 30 V DC / 11…24 V AC							K						
MAG 5000, Polyamide, 115 ... 230 V AC							L						
Communication													
No communication, add-on possible								A					
HART								B					
PROFIBUS PA Profile 3 (only MAG 6000/MAG 6000 I)								F					
PROFIBUS DP Profile 3 (not for Ex) (only MAG 6000/MAG 6000 I)								G					
Modbus RTU/RS 485 (not for Ex) (only MAG 6000/MAG 6000 I)								E					
FOUNDATION Fieldbus H1 (only MAG 6000/MAG 6000 I)								J					

© Siemens 2021

3

Selection and ordering data

	Article No.	Ord. code
Sensor SITRANS FM MAG 3100	**7ME6310-**	
Cable glands/terminal box		
Metric: Polyamide terminal box or MAG 6000 I compact	**1**	
½" NPT: Polyamide terminal box or MAG 6000 I compact	**2**	
Metric: Stainless steel terminal box	**3**	
½" NPT: Stainless terminal box	**4**	

Additional information	Order code
Please add "**-Z**" to Article No. and specify Order code(s) and plain text.	
Certificates	
• Pressure test certificate according to EN 10204-3.1	**C01**
• Material certificate according to EN 10204-3.1	**C12**
• Factory certificate according to EN 10204-2.2	**C14**
• Factory certificate according to EN 10204-2.1	**C15**
Special calibration	
• 5-point calibration for DN 15 ... DN 200[1)]	**D01**
• 5-point calibration for DN 250 ... DN 600[1)]	**D02**
• 5-point calibration for DN 700 ... DN 1200[1)]	**D03**
• 10-point calibration for DN 15 ... DN 200[2)]	**D06**
• 10-point calibration for DN 250 ... DN 600[2)]	**D07**
• 10-point calibration for DN 700 ... DN 1200[2)]	**D08**
• Default (2 × 25 % and 2 × 90 %) match-pair calibration for DN 15 ... DN 200	**D11**
• Default (2 × 25 % and 2 × 90 %) match-pair calibration for DN 250 ... DN 600	**D12**
• Default (2 × 25 % and 2 × 90 %) match-pair calibration for DN 700 ... DN 1200	**D13**
• 5-point, matched-pair calibration for DN 15 ... DN 200[1)]	**D15**
• 5-point, matched-pair calibration for DN 250 ... DN 600[1)]	**D16**
• 5-point, matched-pair calibration for DN 700 ... DN 1200[1)]	**D17**
• 10-point, matched-pair calibration for DN 15 ... DN 200[2)]	**D18**
• 10-point, matched-pair calibration for DN 250 ... DN 600[2)]	**D19**
• 10-point, matched-pair calibration for DN 700 ... DN 1200[2)]	**D20**
Terminal blocks	
• Factory mounted terminal blocks	**N02**
Country specific label	
• CRN (Canadian Registration Number)	**H25**
Tag name plate, stainless steel (specify in plain text)	**Y17**
Tag name plate, plastic (self adhesive)	**Y18**
Customer-specific transmitter setting	**Y20**
Factory mounted sensor cables	
• Sensor cables wired (specify Article No. for sensor cables and order cables separately)	**Y40**
• Sensor cables wired and IP68 sealing (specify Article No. for sensor cables and order cables separately)	**Y41**
Additional calibrations	
• Accredited matched-pair calibration acc. to ISO/IEC 17025: 2005	**On request**[3)]
• Customer-specified calibration up to 10 points	**On request**[3)]
• Customer-witnessed calibration	**On request**[3)]
Any of above calibration	

[1)] 20 %, 40 %, 60 %, 80 %, 100 % of factory Q_{max}

[2)] Ascending and descending at 20 %, 40 %, 60 %, 80 %, 100 % of factory Q_{max}

[3)] Product Variation Request (PVR)

Operating instructions for SITRANS FM MAG 3100

Description	Article No.
• English	**A5E03005599**
• German	**A5E03086288**

All literature is available to download for free, in a range of languages, at
http://www.siemens.com/processinstrumentation/documentation

Accessories

Description	Article No.	
Potting kit for IP68/NEMA 6P sealing of sensor junction box	**FDK-085U0220**	

Please use online Product selector to get latest updates.

Product selector link:
http://www.pia-selector.automation.siemens.com

© Siemens 2021

Selection and ordering data

Sensor SITRANS FM MAG 3100 HT (High Temperature) ↗	Article No. 7ME6320-
↗ Click on the Article No. for the online configuration in the PIA Life Cycle Portal.	
Diameter	
DN 15 (½“)	1 V
DN 25 (1“)	2 D
DN 40 (1½“)	2 R
DN 50 (2“)	2 Y
DN 65 (2½“)	3 F
DN 80 (3“)	3 M
DN 100 (4“)	3 T
DN 125 (5“)	4 B
DN 150 (6“)	4 H
DN 200 (8“)	4 P
DN 250 (10“)	4 V
DN 300 (12“)	5 D
Flange norm and pressure rating	
EN 1092-1	
PN 10 (DN 200 ... 300 (8“ ... 12“))	B
PN 16 (DN 65 ... 300 (2½“ ... 12“))	C
PN 25 (DN 200 ... 300 (8“ ... 12“))	E
PN 40 (DN 15 ... 300 (½“ ... 12“))	F
ANSI B16.5	
Class 150 (½“ ... 12“)	J
Class 300 (½“ ... 12“)	K
AS	
2129, table E	M
Flange material	
Carbon steel flanges ASTM A 105	1
Stainless steel flanges, AISI 304/1.4301	2
Stainless steel flanges and sensor body, AISI 316L/1.4404, polished	3
Liner material	
PTFE (150 °C (302 °F))	2
PTFE including type E protection rings AISI 316/1.4436 (180 °C (356 °F))	3
PFA (150 °C (302 °F)) (DN 15 ... 150 (½“ ... 6“))	7
Electrode material	
AISI 316Ti/1.4571 (not for PFA)	1
Hastelloy C276/2.4819 (PFA liner: Hastelloy C22/2.4602)	2
Platinum	3
Titanium (not for PFA)	4
Tantalum	5
Hastelloy C22/2.4602 incl. grounding electrodes (only PFA)	6
Platinum incl. grounding electrodes (only PFA)	7
Tantalum incl grounding electrodes (only PFA)	8
Transmitter	
Standard sensor for remote transmitter (Order transmitter separately)	A
Ex sensor for remote transmitter (Order transmitter separately)	B
MAG 6000 I, Alu.18 ... 90 V DC, 115 ... 230 V AC	C
MAG 6000 I, Alu. 18 ... 30 V DC, Ex	D
MAG 6000 I, Alu. 115 ... 230 V AC, Ex	E
MAG 6000, Polyamide, 11 ... 30 V DC/11 ... 24 V AC	H
MAG 6000, Polyamide, 115 ... 230 V AC	J
MAG 5000, Polyamide, 11 ... 30 V DC/11 ... 24 V AC	K
MAG 5000, Polyamide, 115 ... 230 V AC	L

Sensor SITRANS FM MAG 3100 HT (High Temperature)	Article No. 7ME6320-
Communication	
No communication, add-on possible	A
HART	B
PROFIBUS PA Profile 3 (only MAG 6000/MAG 6000 I)	F
PROFIBUS DP Profile 3 (only MAG 6000/MAG 6000 I)	G
Modbus RTU/RS 485 (only MAG 6000/MAG 6000 I)	E
FOUNDATION Fieldbus H1 (only MAG 6000/MAG 6000 I)	J
Cable glands/terminal box	
Metric: Polyamide terminal box (max. 150 °C (302 °F)) or MAG 6000 I compact	1
½" NPT: Polyamide terminal box (max. 150 °C (302 °F)) or MAG 6000 I compact	2
Metric: Stainless steel terminal box	3
½" NPT: Stainless steel terminal box	4

Additional information	Order code
Please add “**-Z**“ to Article No. and specify Order code(s) and plain text.	
Certificates	
• Pressure test certificate according to EN 10204-3.1	**C01**
• Material certificate according to EN 10204-3.1	**C12**
• Factory certificate according to EN 10204-2.2	**C14**
• Factory certificate according to EN 10204-2.1	**C15**
Terminal blocks	
• Factory mounted terminal blocks	**N02**
Country specific label	
• CRN (Canadian Registration Number)	**H25**
Tag name made, stainless steel (specify in plain text)	**Y17**
Tag name plate, plastic (self adhesive)	**Y18**
Customer-specific transmitter setting	**Y20**
Factory mounted sensor cables	
• Sensor cables wired (specify Article No. for sensor cables and order cables separately)	**Y40**
• Sensor cables wired and IP68 sealing (specify Article No. for sensor cables nd order cables separately)	**Y41**
Additional calibrations	
• Matched-pair calibration	**On request**[1)]
• Accredited matched-pair calibration acc. to ISO/IEC 17025: 2005	**On request**[1)]
• Customer-specified calibration up to 10 points	**On request**[1)]
• Customer-witnessed calibration Any of above calibration	**On request**[1)]

[1)] Product Variation Request (PVR).

© Siemens 2021

3

Selection and ordering data — Article No.

Accessories for MAG 3100 and MAG 3100 HT sensor

Grounding and protection ring - Type C (Stainless steel)[1)]

- Material AISI 304
- For all liners except PTFE and PFA
- 1 pc.



Size	Nominale pressure					
DN	PN 6	PN 10	PN 16	PN 25	PN 40	AS 2129 Table E
	Article No.	Article No.	Article No.	Article No.	Article No.	Article No.
DN 25					FDK:083N8361	FDK:083N8361
DN 40					FDK:083N8362	FDK:083N8362
DN 50					FDK:083N8344	FDK:083N8344
DN 65	FDK:083N8345		FDK:083N8345		FDK:083N8345	FDK:083N8346
DN 80	FDK:083N8347		FDK:083N8347		FDK:083N8347	FDK:083N8347
DN 100	FDK:083N8070		FDK:083N8025		FDK:083N8025	FDK:083N8025
DN 125	FDK:083N8071		FDK:083N8071		FDK:083N8071	FDK:083N8071
DN 150	FDK:083N8072		FDK:083N8008		FDK:083N8073	FDK:083N8008
DN 200	FDK:083N8074	FDK:083N8011	FDK:083N8011	FDK:083N8011	FDK:083N8075	FDK:083N8011
DN 250	FDK:083N8078	FDK:083N8013	FDK:083N8013	FDK:083N8013	FDK:083N8079	FDK:083N8013
DN 300	FDK:083N8080	FDK:083N8012	FDK:083N8012	FDK:083N8081	FDK:083N8082	FDK:083N8012
DN 350	FDK:083N8083	FDK:083N8039	FDK:083N8039	FDK:083N8084	FDK:083N8085	FDK:083N8039
DN 400	FDK:083N8099	FDK:083N8100	FDK:083N8100	FDK:083N8101	FDK:083N8102	FDK:083N8100
DN 450	FDK:083N8103	FDK:083N8103	FDK:083N8104	FDK:083N8104	FDK:083N8105	FDK:083N8104
DN 500	FDK:083N8107	FDK:083N8107	FDK:083N8108	FDK:083N8108	FDK:083N8109	FDK:083N8108
DN 600	FDK:083N8111	FDK:083N8111	FDK:083N8112	FDK:083N8112		FDK:083N8113
DN 700	FDK:083N8300	FDK:083N8294	FDK:083N8294			FDK:083N8372
DN 750						
DN 800	FDK:083N8303	FDK:083N8304	FDK:083N8304			FDK:083N8373
DN 900	FDK:083N8306	FDK:083N8307	FDK:083N8307			FDK:083N8396
DN 1000	FDK:083N8309	FDK:083N8310	FDK:083N8310			FDK:083N8397
DN 1100		FDK:083N8367	FDK:083N8367			FDK:083N8367
DN 1200	FDK:083N8312	FDK:083N8313	FDK:083N8313			FDK:083N8398
DN 1400	FDK:083N8467	FDK:083N8468	FDK:083N8469			
DN 1500	FDK:083N8471	FDK:083N8472	FDK:083N8473			
DN 1600	FDK:083N8475	FDK:083N8476	FDK:083N8477			
DN 1800	FDK:083N8479	FDK:083N8480	FDK:083N8481			
DN 2000	FDK:083N8483	FDK:083N8484	FDK:083N8485			

[1)] Also for MAG 5100 W (7ME6520 > DN 300/12 inch and 7ME6580).

Size	ANSI			
Inch	Class 150	Class 300	JIS K10	JIS K20
	Article No.	Article No.	Article No.	Article No.
1“	FDK:083N8361	FDK:083N8361	FDK:083N8361	FDK:083N8361
1½“	FDK:083N8362	FDK:083N8362	FDK:083N8362	FDK:083N8362
2“	FDK:083N8344	FDK:083N8344	FDK:083N8344	FDK:083N8344
2½“	FDK:083N8345	FDK:083N8345	FDK:083N8345	FDK:083N8345
3“	FDK:083N8347	FDK:083N8347	FDK:083N8347	FDK:083N8347
4“	FDK:083N8025	FDK:083N8025	FDK:083N8070	FDK:083N8025
5“	FDK:083N8071	FDK:083N8071	FDK:083N8071	FDK:083N8071
6“	FDK:083N8008	FDK:083N8073	FDK:083N8008	FDK:083N8008
8“	FDK:083N8011	FDK:083N8076	FDK:083N8011	FDK:083N8011
10“	FDK:083N8013	FDK:083N8079	FDK:083N8013	FDK:083N8079
12“	FDK:083N8012	FDK:083N8082	FDK:083N8012	FDK:083N8081
14“	FDK:083N8039	FDK:083N8085	FDK:083N8083	FDK:083N8039
16“	FDK:083N8100	FDK:083N8102	FDK:083N8100	FDK:083N8101
18“	FDK:083N8104	FDK:083N8106	FDK:083N8103	FDK:083N8104
20“	FDK:083N8107	FDK:083N8110	FDK:083N8107	FDK:083N8108
24“	FDK:083N8113	FDK:083N8114	FDK:083N8111	FDK:083N8112

Size	AWWA C-207
Inch	
	Article No.
28“	FDK:083N8302
30“	FDK:083N8366
32“	FDK:083N8305
36“	FDK:083N8308
40“	FDK:083N8311
42“	FDK:083N8394
44“	FDK:083N8395
48“	FDK:083N8314
54“	FDK:083N8470
60“	FDK:083N8474
66“	FDK:083N8478
72“	FDK:083N8482
78“	FDK:083N8486

© Siemens 2021

Selection and ordering data (continued)

Grunding and protection ring - Type E (Stainless steel)

- Material: AISI 316
- For all PTFE liners
- 1 pc. incl. straps and screws

Note:

For MAG 3100 HT High temperature version 7ME6320... for PTFE 180 °C (356 °C) versions - grounding ring type E is included and factory mounted.

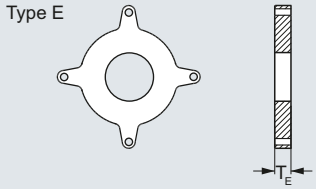

Size	Nominale pressure					
DN	**PN 6**	**PN 10**	**PN 16**	**PN 25**	**PN 40**	**AS2129, Table E**
	Article No.	Article No.	Article No.	Article No.	Article No.	Article No.
DN 15					**FDK:083N8365**	**FDK:083N8365**
DN 25					**FDK:083N8271**	**FDK:083N8272**
DN 40					**FDK:083N8278**	**FDK:083N8280**
DN 50					**FDK:083N8282**	**FDK:083N8281**
DN 65	**FDK:083N8284**		**FDK:083N8285**		**FDK:083N8286**	**FDK:083N8284**
DN 80	**FDK:083N8288**		**FDK:083N8289**		**FDK:083N8290**	**FDK:083N8293**
DN 100	**FDK:083N8116**		**FDK:083N8117**		**FDK:083N8118**	**FDK:083N8117**
DN 125	**FDK:083N8120**		**FDK:083N8121**		**FDK:083N8122**	**FDK:083N8121**
DN 150	**FDK:083N8124**		**FDK:083N8125**		**FDK:083N8126**	**FDK:083N8128**
DN 200	**FDK:083N8129**	**FDK:083N8130**	**FDK:083N8130**	**FDK:083N8131**	**FDK:083N8132**	**FDK:083N8134**
DN 250	**FDK:083N8135**	**FDK:083N8136**	**FDK:083N8137**	**FDK:083N8138**	**FDK:083N8139**	**FDK:083N8143**
DN 300	**FDK:083N8144**	**FDK:083N8144**	**FDK:083N8145**	**FDK:083N8146**	**FDK:083N8147**	**FDK:083N8151**
DN 350	**FDK:083N8152**	**FDK:083N8153**	**FDK:083N8154**	**FDK:083N8155**	**FDK:083N8156**	**FDK:083N8153**
DN 400	**FDK:083N8160**	**FDK:083N8161**	**FDK:083N8162**	**FDK:083N8163**	**FDK:083N8164**	**FDK:083N8161**
DN 450	**FDK:083N8168**	**FDK:083N8169**	**FDK:083N8170**	**FDK:083N8171**	**FDK:083N8172**	**FDK:083N8176**
DN 500	**FDK:083N8177**	**FDK:083N8178**	**FDK:083N8179**	**FDK:083N8180**	**FDK:083N8181**	**FDK:083N8185**
DN 600	**FDK:083N8186**	**FDK:083N8187**	**FDK:083N8188**	**FDK:083N8189**		**A5E32710253**

Size	ANSI			
Inch	**Class 150**	**Class 300**	**JIS K10**	**JIS K20**
	Article No.	Article No.	Article No.	Article No.
½“	**FDK:083N8365**	**FDK:083N8365**		
1“	**FDK:083N8272**	**FDK:083N8272**	**FDK:083N8271**	**FDK:083N8271**
1½“	**FDK:083N8279**	**FDK:083N8279**	**FDK:083N8278**	**FDK:083N8278**
2“	**FDK:083N8283**	**FDK:083N8283**	**FDK:083N8282**	**FDK:083N8282**
2½“	**FDK:083N8287**	**FDK:083N8287**	**FDK:083N8285**	**FDK:083N8285**
3“	**FDK:083N8291**	**FDK:083N8292**	**FDK:083N8288**	**FDK:083N8289**
4“	**FDK:083N8118**	**FDK:083N8119**	**FDK:083N8116**	**FDK:083N8117**
5“	**FDK:083N8122**	**FDK:083N8123**	**FDK:083N8121**	**FDK:083N8122**
6“	**FDK:083N8126**	**FDK:083N8127**	**FDK:083N8125**	**FDK:083N8126**
8“	**FDK:083N8370**	**FDK:083N8133**	**FDK:083N8130**	**FDK:083N8370**
10“	**FDK:083N8140**	**FDK:083N8141**	**FDK:083N8137**	**FDK:083N8139**
12“	**FDK:083N8148**	**FDK:083N8149**	**FDK:083N8144**	**FDK:083N8146**
14“	**FDK:083N8157**	**FDK:083N8158**	**FDK:083N8152**	**FDK:083N8154**
16“	**FDK:083N8165**	**FDK:083N8166**	**FDK:083N8160**	**FDK:083N8165**
18“	**FDK:083N8173**	**FDK:083N8174**	**FDK:083N8169**	**FDK:083N8171**
20“	**FDK:083N8182**	**FDK:083N8183**	**FDK:083N8178**	**FDK:083N8180**
24“	**FDK:083N8190**	**FDK:083N8191**	**A5E32709738**	**A5E32710253**

Note:

For use as protection ring order 2 pcs.
For use as grounding ring order 1 pc.

© Siemens 2021

3

Selection and ordering data — Article No.

Grounding and protecting ring - Type E (Hastelloy)[1)]

- Material: Hastelloy C276
- For all PTFE liners
- 1 pc. incl. straps and screws

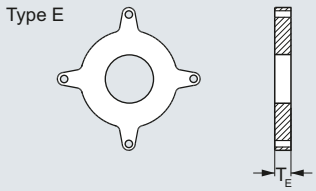

Size	Nominale pressure			Size	ANSI	
DN	**PN 6**	**PN 16**	**PN 40**	**Inch**	**Class 150**	**Class 300**
	Article No.	Article No.	Article No.		Article No.	Article No.
DN 15			**FDK:083N8487**	½“	**FDK:083N8487**	**FDK:083N8487**
DN 25			**FDK:083N8488**	1“	**FDK:083N8489**	**FDK:083N8489**
DN 40			**FDK:083N8490**	1½“	**FDK:083N8491**	**FDK:083N8491**
DN 50			**FDK:083N8492**	2“	**FDK:083N8493**	**FDK:083N8493**
DN 65	**FDK:083N8494**	**FDK:083N8495**	**FDK:083N8496**	2½“	**FDK:083N8497**	**FDK:083N8497**
DN 80	**FDK:083N8498**	**FDK:083N8499**	**FDK:083N8500**	3“	**FDK:083N8501**	**FDK:083N8502**
DN 100	**FDK:083N8503**	**FDK:083N8504**	**FDK:083N8505**	4“	**FDK:083N8506**	**FDK:083N8507**

1) Also for MAG 5100 W (7ME6580).

Grounding ring - Type Flat ring (Stainless steel)

- Material: AISI 316
- For all liners (PTFE max. 150 °C (302 °F))
- 1 pc. incl. straps and screws

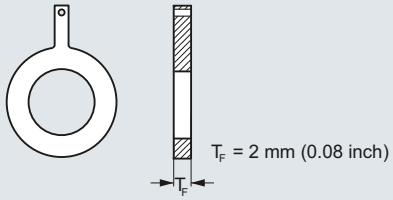

Size	Nominale pressure			Size	ANSI	
DN	**PN 10**	**PN 16**	**PN 40**	**Inch**	**Class 150**	**Class 300**
	Article No.	Article No.	Article No.		Article No.	Article No.
DN 15			**A5E01191968**	½“	**A5E01191969**	
DN 25			**A5E01150880**	1“	**A5E01150022**	**A5E01150378**
DN 40			**A5E01191952**	1½“	**A5E01191961**	
DN 50		**A5E01192006**	**A5E01150918**	2“	**A5E01151121**	**A5E01151194**
DN 65		**A5E01191940**	**A5E01191954**	2½“	**A5E01191962**	
DN 80		**A5E01152876**	**A5E01152876**	3“	**A5E01152910**	**A5E01153422**
DN 100		**A5E01158875**	**A5E01159072**	4“	**A5E01159146**	**A5E01159628**
DN 125		**A5E01191941**	**A5E01191956**	5“	**A5E01191963**	
DN 150		**A5E01191943**	**A5E01191957**	6“	**A5E01191964**	
DN 200	**A5E01191951**	**A5E01191944**	**A5E01191958**	8“	**A5E01191965**	
DN 250	**A5E01191950**	**A5E01191946**	**A5E01191959**	10“	**A5E01191966**	
DN 300	**A5E01191949**	**A5E01191947**	**A5E01191960**	12“	**A5E01191967**	

© Siemens 2021

Selection and ordering data (continued)

Grounding ring - Type Flat ring (Hastelloy)

- Material: Hastelloy C276
- For all liners (PTFE max. 150 °C (302 °F))
- 1 pc. incl. straps and screws

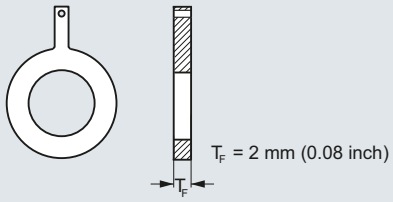

Size	Nominale pressure			Size	ANSI	
DN	**PN 6**	**PN 16**	**PN 40**	**Inch**	**Class 150**	**Class 300**
	Article No.	Article No.	Article No.		Article No.	Article No.
DN 15			**A5E01191981**	½“	**A5E01191989**	
DN 25			**A5E01150882**	1“	**A5E01150028**	**A5E01150379**
DN 40			**A5E01191982**	1½“	**A5E01191990**	
DN 50			**A5E01150922**	2“	**A5E01151124**	**A5E01151197**
DN 65		**A5E01191971**	**A5E01191983**	2½“	**A5E01191991**	
DN 80		**A5E01152889**	**A5E01152889**	3“	**A5E01152913**	**A5E01153424**
DN 100		**A5E01158886**	**A5E01159074**	4“	**A5E01159150**	**A5E01159629**
DN 125		**A5E01191973**	**A5E01191984**	5“	**A5E01191992**	
DN 150		**A5E01191974**	**A5E01191985**	6“	**A5E01191993**	
DN 200	**A5E01191978**	**A5E01191975**	**A5E01191986**	8“	**A5E01191994**	
DN 250	**A5E01191979**	**A5E01191976**	**A5E01191987**	10“	**A5E01191995**	
DN 300	**A5E01191980**	**A5E01191977**	**A5E01191988**	12“	**A5E01191996**	

Grounding ring - Type Flat ring (Tantalum)

- Material: Tantalum
- For all liners (PTFE max. 150 °C (302 °F))
- 1 pc. incl. straps and screws

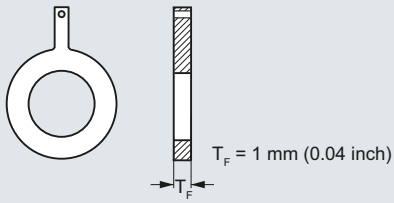

Size	Nominale pressure		Size	ANSI	
DN	**PN 16**	**PN 40**	**Inch**	**Class 150**	**Class 300**
	Article No.	Article No.		Article No.	Article No.
DN 15		**A5E01192007**	½“	**A5E01192010**	
DN 25		**A5E01150883**	1“	**A5E01150030**	**A5E01150381**
DN 40		**A5E01192008**	1½“	**A5E01192011**	
DN 50		**A5E01150926**	2“	**A5E01151129**	**A5E01151199**
DN 65	**A5E01192005**	**A5E01192009**	2½“	**A5E01192012**	
DN 80	**A5E01152890**	**A5E01152890**	3“	**A5E01152916**	**A5E01153427**
DN 100	**A5E01158891**	**A5E01159076**	4“	**A5E01159156**	**A5E01159631**

© Siemens 2021

Dimensional drawings

MAG 3100 and MAG 3100 HT sensor with compact or remote transmitter

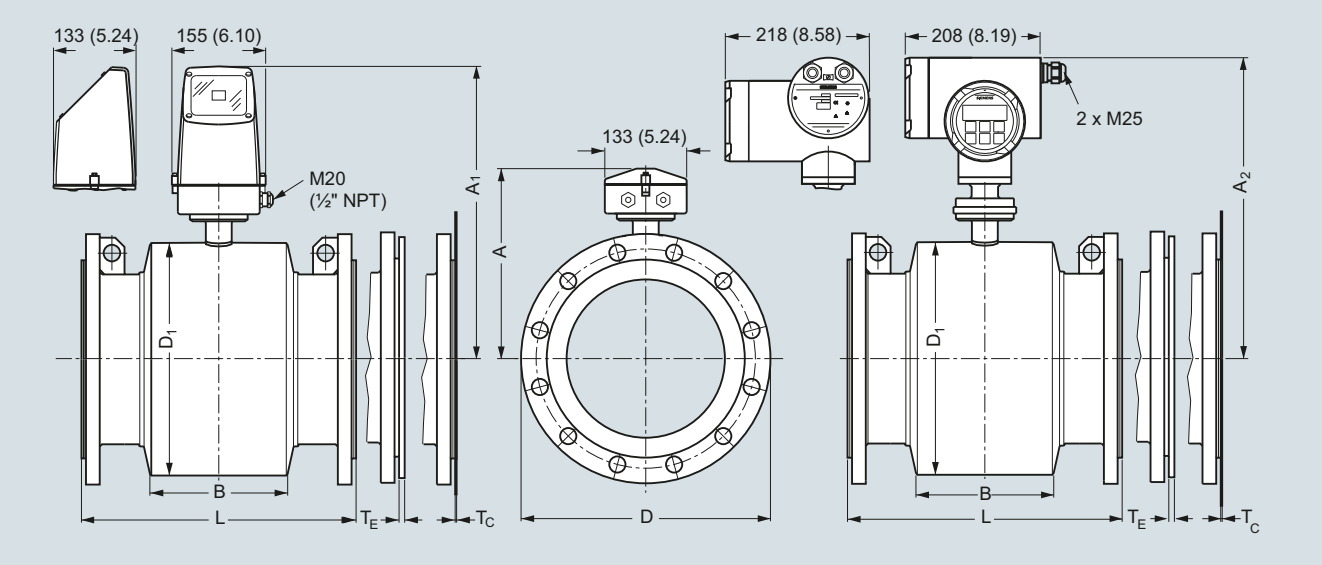

Dimensions in mm (inch)

Metric

DN	A[1)]	A_1	A_2	B	D_1	L[2)3)]							
						EN 1092-1-201						ANSI 16.5	
						PN 6, 10	PN 16/PN 16 non-PED	PN 25	PN 40	PN 63	PN 100	Class 150	Class 300
[mm]	[mm]	[mm]	[mm]	[mm]	[mm]	[mm]	[mm]	[mm]	[mm]	[mm]	[mm]	[mm]	[mm]
15	187	341	338	59	104	-	-	-	200	-	-	200	200
25	187	341	338	59	104	-	-	-	200	-	260	200	200
40	197	351	348	82	124	-	-	-	200	-	280	200	200
50	205	359	356	72	139	-	-	-	200	276	300	200	200
65	212	366	363	72	154	200	200/-	-	200	320	350	200	272
80	222	376	373	72	174	200	200/-	-	272[4)]	323	340	272[4)]	272[4)]
100	242	396	393	85	214	250	250/-	-	250	380	400	250	310
125	255	409	406	85	239	250	250/-	-	250	420	450	250	335
150	276	430	427	85	282	300	300/-	-	300	415	450	300	300
200	304	458	455	137	338	350	350/-	350	350	480	530	350	350
250	332	486	483	157	393	450	450/-	450	450	550	620	450	450
300	357	511	508	157	444	500	500/-	500	500	600	680	500	500
350	362	516	513	270	451	550	550/-	550	550	-	-	550	550
400	387	541	538	270	502	600	600/-	600	600	-	-	600	600
450	418	572	569	310	563	600	600/-	600	600	-	-	600	640
500	443	597	594	350	614	600	600/-	625	680	-	-	600	730
600	494	648	645	320	715	600	600/-	750	800	-	-	600	860
700	544	698	695	450	816	700	875/700	800	-	-	-	800	-
750	571	725	722	556	869	-	-/-	-	-	-	-	950	-
800	606	760	757	560	927	800	1000/800	900	-	-	-	900	-
900	653	807	804	630	1032	900	1125/900	1000	-	-	-	1100	-
1000	704	858	855	670	1136	1000	1250/1000	1100	-	-	-	1100	-
1050	704	858	855	670	1136	-	-/-	-	-	-	-	-	-
1100	755	904	901	770	1238	-	-/-	-	-	-	-	-	-
1200	810	964	961	792	1348	1200	1500/1200	1300	-	-	-	1400	-
1400	925	1079	1076	1000	1574	1400	-/1400	-	-	-	-	-	-
1500	972	1126	1123	1020	1672	1500	-/1500	-	-	-	-	-	-
1600	1025	1179	1176	1130	1774	1600	-/1600	-	-	-	-	-	-
1800	1123	1277	1274	1250	1974	1800	-/1800	-	-	-	-	-	-
2000	1223	1377	1374	1375	2174	2000	-/2000	-	-	-	-	-	-

1) 14.5 mm shorter with stainless steel terminal box (Ex and high temperature version)

2) When grounding rings are used, the thickness of the grounding ring must be added to the built-in length

3) Tolerances on built-in length (PN 6, PN 10, PN 16, PN 25 and PN 40):
DN 15 to DN 200: +0/-3 mm, DN 250 to DN 400: +0/-5 mm, DN 450 to DN 600: +5/-5 mm, DN 700 to DN 2000: +10/-10 mm
Tolerances on built-in length (PN 63 and PN 100): All sizes +8/-8 mm

4) Not according to ISO 20456

© Siemens 2021

Dimensional drawings (continued)

DN	L[1)2)]				T_C[3)]	T_E[3)]	T_F[3)]	Weight[4)]
	AS 2129 E AS 4087 PN 16, 21, 35	AWWA C-207 Class D	JIS K10	JIS K20				
[mm]	[mm]	[mm]	[mm]	[mm]	[mm]	[mm]	[mm]	[kg]
15	200	-	200	200	-	6	2	4
25	200	-	200	200	1.2	6	2	5
40	200	-	200	240	1.2	6	2	8
50	200	-	200	240	1.2	6	2	9
65	200	-	200	272	1.2	6	2	11
80	200 [5)]	-	200[9)]	272[9)]	1.2	6	2	12
100	250	-	250	310	1.2	6	2	16
125	250	-	250	335	1.2	6	2	19
150	300	-	300	300	1.2	6	2	27
200	350	-	350	350	1.2	8	2	40
250	450	-	450	450	1.2	8	2	60
300	500	-	500	500	1.6	8	2	80
350	550	-	550	550	1.6	8	-	110
400	600	-	600	600	1.6	10	-	125
450	600	-	600	640	1.6	10	-	175
500	600[6)]	-	600	680	1.6	10	-	200
600	600[7)]	-	600	800	1.6	10	-	287
700	700[8)]	700	-	-	2.0	-	-	330
750	750[8)]	750	-	-	2.0	-	-	360
800	800[8)]	800	-	-	2.0	-	-	450
900	900[8)]	900	-	-	2.0	-	-	530
1000	1000[8)]	1000	-	-	2.0	-	-	660
1050	-	1000	-	-	2.0	-	-	660
1100	-	1100	-	-	2.0	-	-	1140
1200	1200[6)]	1200	-	-	2.0	-	-	1180
1400	-	1400	-	-	2.0	-	-	1600
1500	-	1500	-	-	3.0	-	-	2460
1600	-	1600	-	-	3.0	-	-	2525
1800	-	1800	-	-	3.0	-	-	2930
2000	-	2000	-	-	3.0	-	-	3665

1) When grounding rings are used, the thickness of the grounding ring must be added to the built-in length.

2) Tolerances on built-in length (PN 6, PN 10, PN 16, PN 25 and PN 40):
DN 15 to DN 200: +0/-3 mm, DN 250 to DN 400: +0/-5 mm, DN 450 to DN 600: +5/-5 mm, DN 700 to DN 2000: +10/-10 mm
Tolerances on built-in length (PN 63 and PN 100): All sizes +8/-8 mm

3) T_C = Protection ring type C , T_E = Grounding ring type E (included and factory mounted for 180 °C PTFE liner), T_F = Grounding ring Type Flat ring

4) Weights are approx. (for PN 16) without transmitter.

5) PN 35 DN 80 = 272 mm (not according to ISO 20456)

6) PN 35 DN 500 = 680 mm

7) PN 35 DN 600 = 750 mm

8) Not AS 4087 PN 21 or PN 35

9) Not according to ISO 20456

D = Outside diameter of flange, see flange tables

© Siemens 2021

3

Dimensional drawings (continued)

Imperial

DN	A[1]	A_1	A_2	B	D_1	L[2][3]								
						EN 1092-1-201						ANSI 16.5/ASME B16.47[4]		
						PN 6, 10	PN 16/PN 16 non-PED	PN 25	PN 40	PN 63	PN 100	Class 150	Class 300	Class 600
[inch]	[inch]	[inch]	[inch]	[inch]	[inch]	[inch]	[inch]	[inch]	[inch]	[inch]	[inch]	[inch]	[inch]	[inch]
½	7.36	13.31	13.25	2.32	4.09	-	-	-	7.87	-	-	7.87	7.87	-
1	7.36	13.31	13.25	2.32	4.09	-	-	-	7.87	-	10.24	7.87	7.87	11.02
1½	7.76	13.70	13.64	3.23	4.88	-	-	-	7.87	-	11.02	7.87	7.87	12.60
2	8.07	14.01	13.95	2.83	5.47	-	-	-	7.87	10.87	11.81	7.87	7.87	12.99
2½	8.35	14.29	14.23	2.83	6.06	7.87	7.87/-	-	7.87	12.60	13.78	7.87	10.71	on request
3	8.74	14.69	14.63	2.83	6.85	7.87	7.87/-	-	10.71[5]	12.72	13.39	10.71[5]	10.71[5]	13.78
4	9.53	15.47	15.41	3.35	8.43	9.84	9.84/-	-	9.84	14.96	-	9.84	12.20	18.11
5	10.04	15.98	15.92	3.35	9.41	9.84	9.84/-	-	9.84	16.54	-	9.84	13.10	18.90
6	10.87	16.81	16.75	5.39	11.10	11.81	11.81/-	-	11.81	16.34	-	11.81	11.81	19.68
8	11.97	17.91	17.85	5.39	13.31	13.78	13.78/-	13.78	13.78	18.90	-	13.78	13.78	23.62
10	13.07	19.02	18.96	6.18	15.47	17.72	17.72/-	17.72	17.72	-	-	17.72	17.72	23.62
12	14.05	20.00	19.94	6.18	17.48	19.69	19.69/-	19.69	19.69	-	-	19.69	19.69	27.56
14	14.25	20.20	20.14	10.63	17.76	21.65	21.65/-	21.65	21.65	-	-	21.65	21.65	-
16	15.24	21.18	21.12	10.63	19.76	23.62	23.62/-	23.62	23.62	-	-	23.62	23.62	-
18	16.45	22.40	22.34	12.20	22.16	23.62	23.62/-	23.62	23.62	-	-	23.62	23.62	-
20	17.44	23.39	23.33	13.78	24.17	23.62	23.62/-	24.61	26.77	-	-	23.62	28.70	-
24	19.45	25.39	25.33	12.59	28.15	23.62	23.62/-	29.53	31.50	-	-	23.62	33.80	-
28	21.42	27.36	27.30	17.72	32.13	27.56	34.45/27.56	31.50	-	-	-	31.50	-	-
30	22.48	28.43	28.37	21.89	34.21	-	-/-	-	-	-	-	37.41	-	-
32	23.86	29.80	29.74	22.05	36.50	31.50	39.37/31.50	35.44	-	-	-	35.44	-	-
36	25.71	31.65	31.59	24.80	40.63	35.43	44.29/35.43	39.38	-	-	-	43.32	-	-
40	27.72	33.85	33.79	26.38	44.72	39.37	49.21/39.37	43.32	-	-	-	43.32	-	-
42	27.72	33.85	33.79	26.38	44.72	-	-/-	-	-	-	-	-	-	-
44	29.72	35.67	35.61	30.31	48.74	-	-/-	-	-	-	-	-	-	-
48	31.89	37.83	37.77	31.18	53.07	47.24	59.06/47.24	51.19	-	-	-	55.12	-	-
54	36.42	42.36	42.30	39.37	61.97	55.12	-/55.12	-	-	-	-	-	-	-
60	38.27	44.21	44.15	40.15	65.83	59.06	59.06/59.06	-	-	-	-	-	-	-
66	40.35	46.30	46.24	44.49	69.84	62.99	-/62.99	-	-	-	-	-	-	-
72	44.21	50.16	50.10	49.21	77.72	70.87	-/70.87	-	-	-	-	-	-	-
78	48.15	54.09	54.03	54.13	85.59	78.74	-/78.74	-	-	-	-	-	-	-

1) 0.571 inch shorter with stainless steel terminal box (Ex and high temperature version)

2) When grounding rings are used, the thickness of the grounding ring must be added to the built-in length

3) Tolerances on built-in length (PN 6, PN 10, PN 16, PN 25 and PN 40):
½" to 8": +0/-0.12", 10" to DN 16" : +0/-0.20", 18" to DN 24" : +0.20/-0.20", 28" to DN 78" : +0.39/-0.39"
Tolerances on built-in length (PN 63 and PN 100): All sizes +0.31"/-0.31"

4) ANSI 16.5 for DN ≤ 24"; ASME B16.47 for DN ≥ 28"

5) Not according to ISO 20456

© Siemens 2021

Dimensional drawings (continued)

DN	L[1)2)] AS 2129 E AS 4087 PN 16, 21, 35	AWWA C-207 Class D	JIS K10	JIS K20	T_C[3)]	T_E[3)]	T_F[3)]	Weight[4)]
[inch]	[inch]	[inch]	[inch]	[inch]	[inch]	[inch]	[inch]	[lb]
½	7.87	-	7.87	7.87	-	0.24	0.08	9
1	7.87	-	7.87	7.87	0.05	0.24	0.08	11
1½	7.87	-	7.87	9.44	0.05	0.24	0.08	17
2	7.87	-	7.87	9.44	0.05	0.24	0.08	20
2½	7.87	-	7.87	10.70	0.05	0.24	0.08	24
3	7.875)	-	7.878)	10.709)	0.05	0.24	0.08	26
4	9.84	-	9.84	12.20	0.05	0.24	0.08	35
5	9.84	-	9.84	13.18	0.05	0.24	0.08	42
6	11.81	-	11.81	11.81	0.05	0.24	0.08	60
8	13.78	-	13.77	13.77	0.05	0.31	0.08	88
10	17.72	-	17.71	17.71	0.05	0.31	0.08	132
12	19.69	-	19.68	19.68	0.06	0.31	0.08	176
14	21.65	-	21.65	21.65	0.06	0.31	-	242
16	23.62	-	23.62	23.62	0.06	0.39	-	275
18	23.62	-	23.62	25.19	0.06	0.39	-	385
20	23.626)	-	23.62	26.77	0.06	0.39	-	440
24	23.627)	-	23.62	31.49	0.06	0.39	-	633
28	27.568)	27.56	-	-	0.08	-	-	728
30	29.538)	29.52	-	-	0.08	-	-	794
32	31.807)	31.50	-	-	0.08	-	-	992
36	35.438)	35.43	-	-	0.08	-	-	1168
40	39.378)	39.37	-	-	0.08	-	-	1455
42	-	39.37	-	-	0.08	-	-	1455
44	-	43.31	-	-	0.08	-	-	2513
48	47.248)	47.24	-	-	0.08	-	-	2601
54	-	55.12	-	-	0.12	-	-	3528
60	-	59.06	-	-	0.12	-	-	5423
66	-	63.00	-	-	0.12	-	-	5566
72	-	70.87	-	-	0.12	-	-	6460
78	-	78.74	-	-	0.12	-	-	8080

1) When grounding rings are used, the thickness of the grounding ring must be added to the built-in length.

2) Tolerances on built-in length (PN 6, PN 10, PN 16, PN 25 and PN 40):
½" to 8": +0/-0.12", 10" to 16" : +0/-0.20", 18" to 24" : +0.2/-0.2", 28" to 78" : +0.39/-0.39"
Tolerances on built-in length (PN 63 and PN 100): All sizes +0.31"/-0.31"

3) T_C = Protection ring type C , T_E = Grounding ring type E (included and factory mounted for 180 °C PTFE liner), T_F = Grounding ring Type Flat ring

4) Weights are for ANSI 150 without transmitter.

5) PN 35 DN 80 = 10.07 inch

6) PN 35 DN 500 = 26.77 inch

7) PN 35 DN 600 = 2.53 inch

8) Not AS 4087 PN 21 or PN 35

9) Not according to ISO 20456

D = Outside diameter of flange, see flange tables

© Siemens 2021

MAG 3100 P

Overview

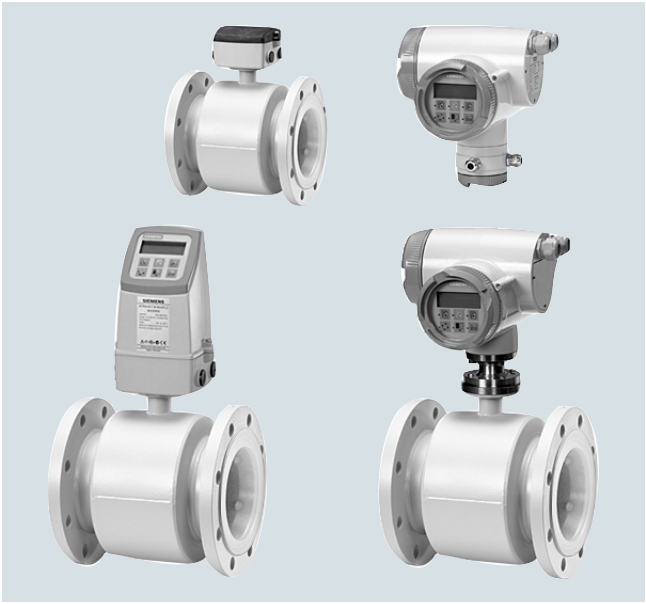

The SITRANS FM MAG 3100 P is designed to meet the most common specifications within chemical and process industries.

Benefits

- DN 15 to DN 300 (½" to 12")
- Included in Quick Ship Program (delivery time see PIA LCP)
- Most used flowmeter in the chemical and process industries with PTFE/PFA liner and Hastelloy electrodes
- Excellent chemical resistance
- Full scope of global approvals for hazardous areas:
  - ATEX, FM, CSA, IEcEx
  - 24 V and 115/230 V Ex compact and remote
  - intrinsically safe ia analog output
- Comprehensive self-diagnostic for error indication and error logging
- Fully welded construction provides a ruggedness that suits the toughest applications and environments.
- Easy commissioning, the SENSORPROM unit automatically updates settings.
- MAG 6000 I full NAMUR compliance
  - compliant with NE 21, NE 32, NE 43, NE 53 and NE70

Application

The main applications of the SITRANS FM electromagnetic flow sensors can be found in the following fields:

- Chemical industry
- Process industry
- Pulp and paper
- Industrial waste water

Design

- Compact or remote mounting possible
- Easy “plug & play“ field changeability of transmitter
- High temperature sensor for applications with temperatures up to 150 °C (302 °F)
- Meets EEC directives: PED, 2014/68/EU pressure directive for EN 1092-1 flanges
- Build-in length according to ISO 20456
- Onsite or factory upgrade to IP68/NEMA 6P of a standard sensor.

Mode of operation

The flow measuring principle is based on Faraday’s law of electromagnetic induction according to which the sensor converts the flow into an electrical voltage proportional to the velocity of the flow.

© Siemens 2021

Integration

The complete flowmeter consists of a flow sensor and an associated transmitter MAG 5000, 6000 and 6000 I.

The flexible communication concept USM II simplifies integration and update to a variety of fieldbus systems such as HART, FOUNDATION Fieldbus H1, DeviceNet, PROFIBUS DP and PA, Modbus RTU/RS 485.

Pressure-temperature curve to EN (DIN) flanges, material A 105 carbon steel

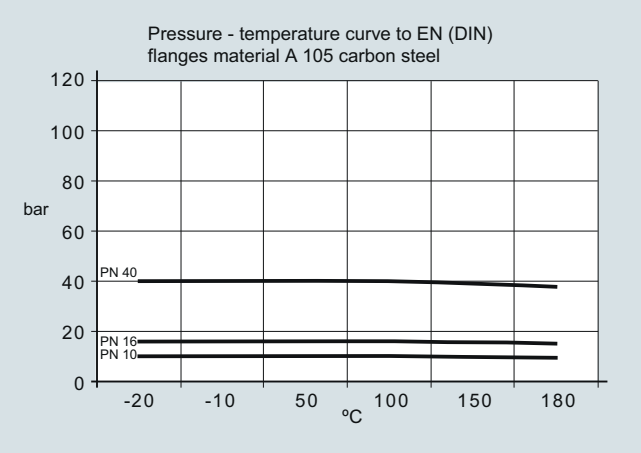

Pressure-temperature curve to ANSI B16.5 flanges

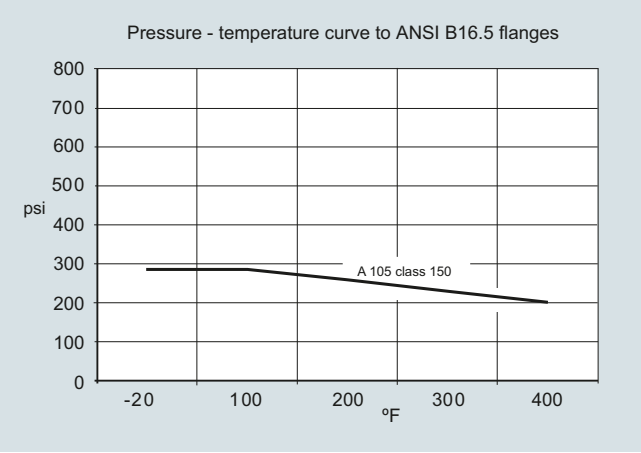

Note: The pressure-temperature curves only assist in the selection of a system. No responsibility is taken for the correctness of the information. For exact data please refer to the PED requirements. For further information on the PED standard and requirements, see Pressure Equipment Directive in Appendix (chapter 10).

© Siemens 2021

Technical specifications

Product characteristic	Chemical and process industry-oriented (Included in Quick Ship Program
Nominal size	• PTFE: DN 15 … 300 (½" … 12") • PFA: DN 15 … 150 (½" … 6")
Measuring principle	Electromagnetic induction
Excitation frequency (Mains supply: 50 Hz/60 Hz)	• DN 15 … 65 (½" … 2½"): 12.5 Hz/15 Hz • DN 80 … 150 (3" … 6"): 6.25 Hz/7.5 Hz • DN 200 … 300 (8" … 12"): 3.125 Hz/3.75 Hz
Process connection	
Flanges	EN 1092-1, raised face[1] (EN 1092-1, DIN 2501 & BS 4504 have the same mating dimensions) • DN 15 … 50 (½" … 2"): PN 40 (580 psi) • DN 65 … 300 (2½" … 12"): PN 16 (232 psi) • DN 200 … 300 (8" … 12"): PN 10 (145 psi) ANSI B16.5 (~BS 1560), raised face • ½" … 12": Class 150 (20 bar (290 psi))
Rated operation conditions	
Ambient temperature (conditions also dependent on liner characteristiques)	
• Standard Sensor	-40 … +100 °C (-40 … +212 °F)
• Ex sensor	-20 … +60 °C (-4 … +140 °F)
• Compact with transmitter	
- MAG 5000/6000	-20 … +60 °C (-4 … +140 °F)
- MAG 6000 I	-20 … +60 °C (-4 … +140 °F)
- MAG 6000 I Ex	-20 … +60 °C (-4 … +140 °F)
Operating pressure [abs. bar] (maximum operating pressure decreases with increasing operating temperature and with stainless steel flanges)	• PTFE Teflon - DN 15 … 300 (½" … 12"): 0.3 … 40 bar (4 … 580 psi) • PFA - DN 15 … 150 (½" … 6"): Vacuum 0.02 … 50 bar (0.29 … 725 psi)
Enclosure rating	IP67 to EN 60529/NEMA 4X/6, 1 mH_2O for 30 min Option: IP68 to EN 60529/NEMA 6P, 10 mH_2O cont. (not for Ex)
Pressure drop at 3 m/s	As straight pipe
Test pressure	1.5 x PN (where applicable)
Mechanical load (Vibration)	• 18 … 1000 Hz random in x, y, z, directions for 2 hours according to EN 60068-2-36 • Sensor: 3.17 g RMS • Sensor with compact MAG 5000/6000 mounted transmitter: 3.17 g RMS • Sensor with compact MAG 6000 I/6000 I Ex mounted transmitter: 1.14 g RMS
Temperature of medium	• PTFE -20 … +130 °C (-4 … +266 °F) • PFA -20 … +150 °C (-4 … +302 °F)
EMC	2014/30/EU

Design	
Weight	See dimensional drawings
Flange and housing material	Carbon steel ASTM A 105, with corrosion resistant coating of category C4 according to ISO 12944-2
Measuring pipe material	Stainless steel AISI 304/1.4301
Electrode material	PTFE: Hastelloy C276/2.4819, Platinum, Tantalum PFA: Hastelloy C22/2.4602
Grounding electrode material	Optional in Hastelloy C22/2.602
Terminal box (remote version only)	• Standard fibre glass reinforced polyamide • Option Stainless steel AISI 316/1.4436 • Ex sensor: Stainless steel AISI 316/1.4436
Cable entries	• Remote installation 2 x M20 or 2 x ½" NPT • Compact installation - MAG 5000/MAG 6000: 4 x M20 or 4 x ½" NPT - MAG 6000 I: 2 x M25 or 2 x ½" NPT (for supply/output) - MAG 6000 I Ex de: 2 x M25 or 2 x ½" NPT (for supply/output)
Certificates and approvals	
Calibration	
• Default calibration	Zero-point, 2 x 25 % and 2 x 90 %
Hazardous areas	
• Ex-sensor in compact or remote version with MAG 6000 I Ex	• ATEX, FM, CSA, IECEx, EAC Ex, NEPSI - Zone 1 Ex d e ia IIC T6 Gb • ATEX, FM, CSA, IECEx - Zone 21 Ex tD A21 IP67 • FM - XP IS Class I Div. 1 Groups A, B, C, D[2] - DIP Class II+III Div. 1 Groups E, F, G[2]
• Standard sensor with/without MAG 5000/6000/6000 I	• FM - NI Class I Div. 2 Groups A, B, C, D - NI Class I Zone 2 Groups IIC
Pressure equipment	PED, CRN
Others	• EAC (Russia, Belarus, Kazakhstan) • KCC (South Korea)

[1] DN ≤ 600 type 01 (SORF); DN > 600 type 11 (WNRF)

[2] In compact version only.

© Siemens 2021

Technical specifications (continued)

Available Options for the SITRANS MAG 3100 P

The MAG 3100P is designed to meet the most common specifications within chemical and process industries. Therefore not all options are available. If you miss a few options please check out or product MAG 3100 which is covering many more options.

Available Options for Liner PTFE with Platinum electrodes

Diameter		Connection			
MAG 3100 P	**Order code**	**EN 1092-1, PN 10**	**EN 1092-1, PN 16**	**EN 1092-1, PN 40**	**AISI B 16.5, class 150**
DN 15, ½"	**1V**			•	
DN 25, 1"	**2D**			•	•
DN 40, 1 ½"	**2R**			•	
DN 50, 2"	**2Y**			•	•
DN 65, 2 ½"	**3F**				
DN 80, 3"	**3M**		•		
DN 100, 4"	**3T**		•		
DN 125, 5"	**4B**		•		
DN 150, 6"	**4H**		•		
DN 200, 8"	**4P**				
DN 250, 10"	**4V**				
DN 300, 12"	**5D**				

Available Options for Liner PTFE with Tantalum electrodes

Diameter		Connection			
MAG 3100 P	**Order code**	**EN 1092-1, PN 10**	**EN 1092-1, PN 16**	**EN 1092-1, PN 40**	**AISI B 16.5, class 150**
DN 15, ½"	**1V**			•	
DN 25, 1"	**2D**			•	•
DN 40, 1 ½"	**2R**			•	
DN 50, 2"	**2Y**			•	•
DN 65, 2 ½"	**3F**		•		
DN 80, 3"	**3M**		•		•
DN 100, 4"	**3T**		•		•
DN 125, 5"	**4B**				
DN 150, 6"	**4H**		•		
DN 200, 8"	**4P**		•		
DN 250, 10"	**4V**		•		
DN 300, 12"	**5D**				

Available Options for Liner PTFE with Hastelloy C electrodes incl. grounding electrodes

Diameter		Connection			
MAG 3100 P	**Order code**	**EN 1092-1, PN 10**	**EN 1092-1, PN 16**	**EN 1092-1, PN 40**	**AISI B 16.5, class 150**
DN 15, ½"	**1V**			•	
DN 25, 1"	**2D**			•	•
DN 40, 1 ½"	**2R**			•	
DN 50, 2"	**2Y**			•	•
DN 65, 2 ½"	**3F**		•		
DN 80, 3"	**3M**		•		•
DN 100, 4"	**3T**		•		•
DN 125, 5"	**4B**				
DN 150, 6"	**4H**		•		•
DN 200, 8"	**4P**				•
DN 250, 10"	**4V**				•
DN 300, 12"	**5D**				

© Siemens 2021

3

Selection and ordering data

	Article No.
Sensor SITRANS FM MAG 3100 P (Short delivery time) ↗	**7ME6340-**
↗ Click on the Article No. for the online configuration in the PIA Life Cycle Portal.	■ ■ ■ ■ ■ - ■ ■ ■ ■
Diameter	
DN 15 (½“)	**1 V**
DN 25 (1“)	**2 D**
DN 40 (1½“)	**2 R**
DN 50 (2“)	**2 Y**
DN 65 (2½“)	**3 F**
DN 80 (3“)	**3 M**
DN 100 (4“)	**3 T**
DN 125 (5“)	**4 B**
DN 150 (6“)	**4 H**
DN 200 (8“)	**4 P**
DN 250 (10“)	**4 V**
DN 300 (12“)	**5 D**
Flange norm and pressure rating	
EN 1092-1	
PN 10 (DN 200 ... 300 (8“ … 12“))	**B**
PN 16 (DN 65 ... 300 (2½“ … 12“))	**C**
PN 40 (DN 15 ... 50 (½“ … 2“)	**F**
ANSI B16.5	
Class 150 (½“ ... 12“)	**J**
Flange material	
Carbon steel flanges ASTM A 105	**1**
Liner material	
PTFE (150 °C (302 °F))	**3**
PFA (150 °C (302 °F)) (DN 15 ... 150 (½" ... 6"))	**7**
Electrode material	
Hastelloy C	**2**
Platinum	**3**
Tantalum	**5**
Hastelloy C incl. grounding electrodes	**6**
Transmitter	
Standard sensor for remote transmitter (Order transmitter separately)	**A**
Ex sensor for remote transmitter (Order transmitter separately)	**B**
MAG 6000 I, Aluminum, 18 ... 90 V DC, 115 ... 230 V AC	**C**
MAG 6000 I, Aluminum, 18 ... 30 V DC, Ex	**D**
MAG 6000 I, Aluminum, 115 ... 230 V AC, Ex	**E**
MAG 6000, Polyamide, 11 … 30 V DC/11 ... 24 V AC	**H**
MAG 6000, Polyamide, 115 ... 230 V AC	**J**
MAG 5000, Polyamide, 11 ... 30 V DC/11 ... 24 V AC	**K**
MAG 5000, Polyamide, 115 ... 230 V AC	**L**
Communication	
No communication, add-on possible	**A**
HART	**B**
PROFIBUS PA Profile 3 (only MAG 6000/MAG 6000 I)	**F**
PROFIBUS DP Profile 3 (not for Ex) (only MAG 6000/MAG 6000 I)	**G**
Modbus RTU/RS 485 (not for Ex) (only MAG 6000/MAG 6000 I)	**E**
FOUNDATION Fieldbus H1 (only MAG 6000/6000 I)	**J**
Cable glands/terminal box	
Metric: Polyamide terminal box or MAG 6000 I compact	**1**
½" NPT: Polyamide terminal box or MAG 6000 I compact	**2**
Metric: Stainless steel terminal box	**3**
½" NPT: Stainless steel terminal box	**4**

	Order code
Additional information	
Please add “**-Z**“ to Article No. and specify Order code(s) and plain text.	
Certificates	
• Factory certificate according to EN 10204-2.2	**C14**
• Factory certificate according to EN 10204-2.1	**C15**
Terminal blocks	
• Factory mounted terminal blocks	**N02**
Country specific label	
• CRN (Canadian Registration Number)	**H25**
Tag name plate, stainless steel (specify in plain text)	**Y17**
Tag name plate, plastic (self adhesive)	**Y18**
Customer-specific transmitter setting	**Y20**
Factory mounted sensor cables	
• Sensor cables wired (specify Article No. for sensor cables and order cables separately)	**Y40**
• Sensor cables wired and IP68 sealing (specify Article No. for sensor cables nd order cables separately)	**Y41**
Additional calibrations	
• Matched-pair calibration	**On request**[1]
• Accredited matched-pair calibration acc. to ISO/IEC 17025: 2005	**On request**[1]
• Customer-specified calibration up to 10 points	**On request**[1]
• Customer-witnessed calibration Any of above calibration	**On request**[1]

[1] Product Variation Request (PVR).

Operating instructions for SITRANS FM MAG 3100 P

Description	Article No.
• English	**A5E03005599**
• German	**A5E03086288**

All literature is available to download for free, in a range of languages, at
http://www.siemens.com/processinstrumentation/documentation

Accessories

Description	Article No.	
Potting kit for IP68/NEMA 6P sealing of sensor junction box	**FDK-085U0220**	

Please use online Product selector to get latest updates.

Product selector link:
http://www.pia-selector.automation.siemens.com

© Siemens 2021

Selection and ordering data (continued)

Accessories for MAG 3100 P sensor

Grounding and protection ring - Type E (Stainless steel)

- Material: AISI 316
- For liner PTFE
- 1 pc. incl. straps and screws

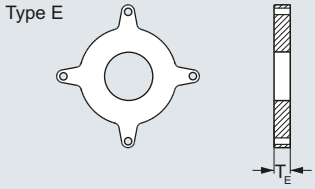

Size	Nominale pressure			Size	ANSI[1)]
DN	**PN 10**	**PN 16**	**PN 40**	**Inch**	**Class 150**
	Article No.	Article No.	Article No.		Article No.
DN 15			**FDK:083N8365**	½“	**FDK:083N8365**
DN 25			**FDK:083N8271**	1“	**FDK:083N8272**
DN 40			**FDK:083N8278**	1½“	**FDK:083N8279**
DN 50			**FDK:083N8282**	2“	**FDK:083N8283**
DN 65		**FDK:083N8285**		2½“	**FDK:083N8287**
DN 80		**FDK:083N8289**		3“	**FDK:083N8291**
DN 100		**FDK:083N8117**		4“	**FDK:083N8118**
DN 125		**FDK:083N8121**		5“	**FDK:083N8122**
DN 150		**FDK:083N8125**		6“	**FDK:083N8126**
DN 200	**FDK:083N8130**	**FDK:083N8130**		8“	**FDK:083N8370**
DN 250	**FDK:083N8136**	**FDK:083N8137**		10“	**FDK:083N8140**
DN 300	**FDK:083N8144**	**FDK:083N8145**		12“	**FDK:083N8148**

For use as protection ring order 2 pcs.
For use as grounding ring order 1 pc.

Grounding and protection ring - Type E (Hastelloy)

- Material: Hastelloy C276
- For liner PTFE
- 1 pc. incl. straps and screws

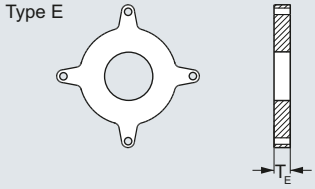

Size	Nominale pressure		Size	ANSI[1)]
DN	**PN 16**	**PN 40**	**Inch**	**Class 150**
	Article No.	Article No.		Article No.
DN 15		**FDK:083N8487**	½“	**FDK:083N8487**
DN 25		**FDK:083N8488**	1“	**FDK:083N8489**
DN 40		**FDK:083N8490**	1½“	**FDK:083N8491**
DN 50		**FDK:083N8492**	2“	**FDK:083N8493**
DN 65	**FDK:083N8495**		2½“	**FDK:083N8497**
DN 80	**FDK:083N8499**		3“	**FDK:083N8501**
DN 100	**FDK:083N8504**		4“	**FDK:083N8506**

[1)] For dimensions of MAG 3100 P see Dimensional drawings.

© Siemens 2021

Selection and ordering data (continued)

Grounding ring - Type Flat ring (Stainless steel)

- Material: AISI 316
- For liner PTFE and PFA
- 1 pc. incl. straps and screws

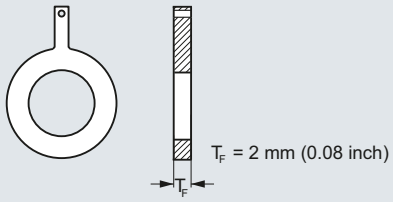

Size	Nominale pressure			Size	ANSI[1)]
DN	PN 10	PN 16	PN 40	Inch	Class 150
	Article No.	Article No.	Article No.		Article No.
DN 15			**A5E01191968**	½“	**A5E01191969**
DN 25			**A5E01150880**	1“	**A5E01150022**
DN 40			**A5E01191952**	1½“	**A5E01191961**
DN 50			**A5E01150918**	2“	**A5E01151121**
DN 65		**A5E01191940**		2½“	**A5E01191962**
DN 80		**A5E01152876**		3“	**A5E01152910**
DN 100		**A5E01158875**		4“	**A5E01159146**
DN 125		**A5E01191941**		5“	**A5E01191963**
DN 150		**A5E01191943**		6“	**A5E01191964**
DN 200	**A5E01191951**	**A5E01191944**		8“	**A5E01191965**
DN 250	**A5E01191950**	**A5E01191946**		10“	**A5E01191966**
DN 300	**A5E01191949**	**A5E01191947**		12“	**A5E01191967**

1) For dimensions of MAG 3100 P see Dimensionl drawings.

Grounding ring - Type Flat ring (Hastelloy)

- Material: Hastelloy C276
- For liner PTFE and PFA
- 1 pc. incl. straps and screws

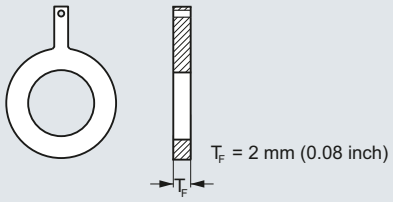

Size	Nominale pressure			Size	ANSI[1)]
DN	PN 10	PN 16	PN 40	Inch	Class 150
	Article No.	Article No.	Article No.		Article No.
DN 15			**A5E01191981**	½“	**A5E01191989**
DN 25			**A5E01150882**	1“	**A5E01150028**
DN 40			**A5E01191982**	1½“	**A5E01191990**
DN 50			**A5E01150922**	2“	**A5E01151124**
DN 65		**A5E01191971**		2½“	**A5E01191991**
DN 80		**A5E01152889**		3“	**A5E01152913**
DN 100		**A5E01158886**		4“	**A5E01159150**
DN 125		**A5E01191973**		5“	**A5E01191992**
DN 150		**A5E01191974**		6“	**A5E01191993**
DN 200	**A5E01191978**	**A5E01191975**		8“	**A5E01191994**
DN 250	**A5E01191979**	**A5E01191976**		10“	**A5E01191995**
DN 300	**A5E01191980**	**A5E01191977**		12“	**A5E01191996**

1) For dimensions of MAG 3100 P see Dimensional drawings.

© Siemens 2021

Dimensional drawings

MAG 3100 P sensor with compact or remote transmitter

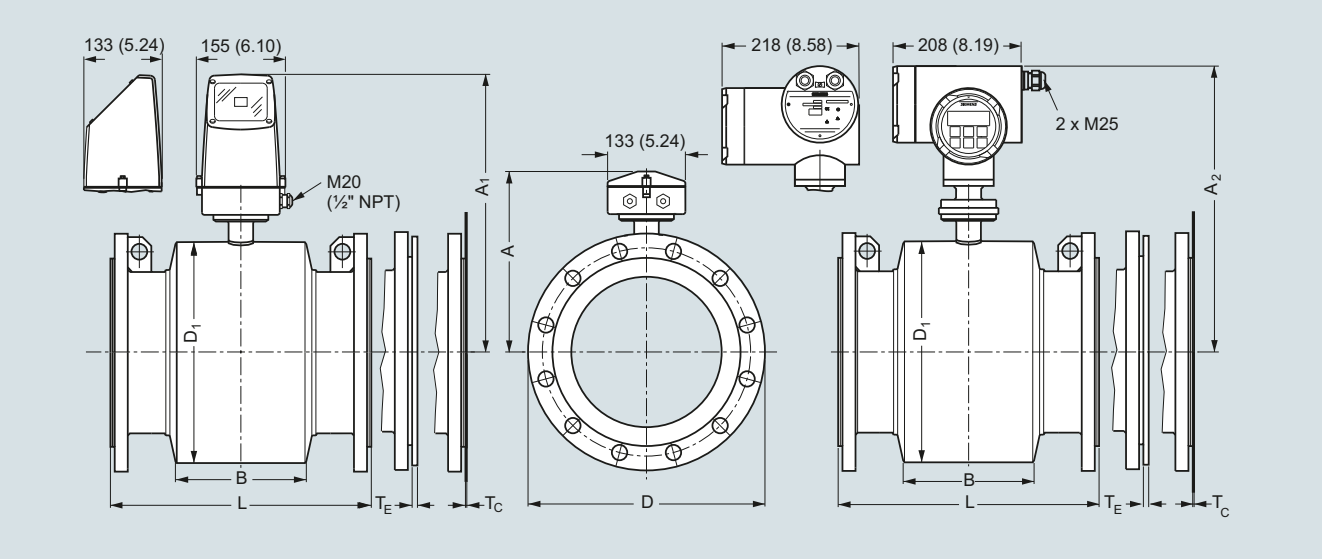

Dimensions in mm (inch)

Metric

DN	A[1]	A_1	A_2	B	D1	L[2]				T_E[3]	T_F[3]	Weight[4]
						EN 1092-1-201			ANSI 16.5			
						PN 10	PN 16	PN 40	Class 150			
[mm]	[mm]	[mm]	[mm]	[mm]	[mm]	[mm]	[mm]	[mm]	[mm]	[mm]	[mm]	[kg]
15	187	341	338	59	104	-	-	200	200	6	2	4
25	187	341	338	59	104	-	-	200	200	6	2	5
40	197	351	348	82	124	-	-	200	200	6	2	8
50	205	359	356	72	139	-	-	200	200	6	2	9
65	212	369	366	72	154	-	200/-	-	200	6	2	11
80	222	376	373	72	174	-	200/-	-	272[5]	6	2	12
100	242	396	393	85	214	-	250/-	-	250	6	2	16
125	255	409	406	85	239	-	250/-	-	250	6	2	19
150	276	430	427	85	282	-	300/-	-	300	6	2	27
200	304	458	455	137	338	350	350/-	-	350	8	2	40
250	332	486	483	157	393	450	450/-	-	450	8	2	60
300	357	511	508	157	444	500	500/-	-	500	8	2	80

1) 14.5 mm shorter with stainless steel terminal box (Ex and high temperature version)

2) When grounding rings are used, the thickness of the grounding ring must be added to the built-in length.

3) T_E = Grounding ring Type E, T_F = Grounding ring Type Flat ring

4) Weights are approx. (for PN 16) without transmitter

5) Not according to ISO 20456

- not available

D = Outside diameter of flange, see flange tables

© Siemens 2021

Dimensional drawings (continued)

Imperial

DN	A[1]	A_1	A_2	B	D1	L[2]				T_E[3]	T_F[3]	Weight[4]
						EN 1092-1-201			ANSI 16.5			
						PN 10	PN 16	PN 40	Class 150			
[inch]	[inch]	[inch]	[inch]	[inch]	[inch]	[inch]	[inch]	[inch]	[inch]	[inch]	[inch]	[lbs]
½	7.36	13.4	13.34	2.32	4.09	-	-	7.87	7.87	0.24	0.08	9
1	7.36	13.4	13.34	2.32	4.09	-	-	7.87	7.87	0.24	0.08	11
1½	7.76	13.8	13.74	3.23	4.88	-	-	7.87	7.87	0.24	0.08	17
2	8.07	14.1	14.04	2.83	5.47	-	-	7.87	7.87	0.24	0.08	20
2½	8.35	14.4	14.34	2.83	6.06	-	7.87/-	-	7.87	0.24	0.08	24
3	8.74	14.8	14.74	2.83	6.85	-	7.87/-	-	10.71[5]	0.24	0.08	26
4	9.53	15.6	15.54	3.35	8.43	-	9.84/-	-	9.84	0.24	0.08	35
5	10.04	16.1	16.04	3.35	9.41	-	9.84/-	-	9.84	0.24	0.08	42
6	10.87	16.9	16.84	3.35	11.10	-	11.81/-	-	11.81	0.24	0.08	60
8	11.97	18.0	17.94	5.39	13.31	13.78	13.78/-	-	13.78	0.31	0.08	88
10	13.07	19.1	19.04	6.18	15.47	17.72	17.72/-	-	17.72	0.31	0.08	132
12	14.05	20.1	20.04	6.18	17.48	19.69	19.69/-	-	19.69	0.31	0.08	176

1) 0.571 inch shorter with stainless steel terminal box (Ex and high temperature version)

2) When grounding rings are used, the thickness of the grounding ring must be added to the built-in length.

3) T_E = Grounding ring Type E, T_F = Grounding ring Type Flat ring

4) Weights are for ANSI 150 without transmitter.

5) Not according to ISO 20456

D = Outside diameter of flange, see flange tables

© Siemens 2021

Overview



The SITRANS FM MAG 5100 W is an electromagnetic flow sensor designed to meet ground water, drinking water, waste water, sewage or sludge applications.

Benefits

- DN 15 to DN 1200/2000 (½" to 48"/78")
- Stock program of MAG 5100 W secures short delivery time
- Connection flanges EN 1092-1 (DIN 2501), ANSI, AWWA, AS and JIS
- NBR Hard Rubber and Ebonite Hard Rubber liner for all water applications
- EPDM liner with drinking water approvals
- Hastelloy integrated grounding and measuring electrodes
- Increased low flow accuracy for water leak detection, due to coned liner design.
- Drinking water approvals
- Suitable for direct burial and constant flooding
- Custody transfer approvals
- Built-in length according to ISO 20456; the standard includes sizes up to DN 400.
- Easy commissioning, SENSORPROM unit automatically uploads calibration values and settings.
- Designed so patented in-situ verification can be conducted. Using SENSORPROM fingerprint.
- Custody transfer option for water billing, with type approval after OIML R 49 and verified according to MI-001 - 0D inlet/ 0D outlet installation
  - Pattern approval OIML R 49
  - Conform to ISO 4064 and EN 14154 for mechanical flowmeters
  - PTB K7.2
  - Kiwa water approval
- FM Fire Service Meter (Class Number 1044) for automatic fire protection systems.
- Meets EEC directives: PED 2014/68/EU pressure directive for EN 1092-1 flanges
- Simple onsite or factory upgrade to IP68/NEMA 6P of a standard sensor
- Type approval of marine equipment (ABS, Bureau Veritas, DNV-GL, Lloyd's Register)

Application

The main applications of the SITRANS FM electromagnetic flow sensors can be found in the following fields:

- Water abstraction
- Water treatment
- Water distribution network (leak detection management)
- Custody transfer water meters
- Irrigation
- Waste water treatment
- Filtration plant (e.g. reverse osmosis and ultra filtration)
- Industrial water applications

Mode of operation

The flow measuring principle is based on Faradays law of electromagnetic induction according to which the sensor converts the flow into an electrical voltage proportional to the velocity of the flow.

Integration

The complete flow meter consists of a flow sensor and an associated transmitter SITRANS FM MAG 5000, MAG 6000 or MAG 6000 I.

The flexible communication concept USM II simplifies integration and update to a variety of fieldbus systems, e.g. HART, DeviceNet, PROFIBUS DP and PA, FOUNDATION Fieldbus H1 or Modbus RTU/RS 485.

© Siemens 2021

3

Technical specifications

Product characteristic	MAG 5100 W (7ME6520) Mainly for the European market EPDM or NBR lining	MAG 5100 W (7ME6580) Mainly for the non-European market Ebonite lining
Design and nominal size	Coned sensor (octagon liner): DN 15 ... 40 (½" … 1½")	
	Coned sensor: DN 50 … 300 (2" … 12")	Full bore sensor: DN 25 … 2 000 (1" … 78")
	Full bore sensor: DN 350 … 1200 (14" … 48")	
Measuring principle	Electromagnetic induction	Electromagnetic induction
Excitation frequency (Mains supply: 50/60 Hz)	DN 15 … 65 (½" … 2½"): 12.5 Hz/15 Hz	DN 25 … 65 (1" … 2½"): 12.5 Hz/15 Hz
	DN 80 … 150 (3" … 6"): 6.25 Hz/7.5 Hz	DN 80 … 150 (3" … 6"): 6.25 Hz/7.5 Hz
	DN 200 … 300 (8" … 12"): 3.125 Hz/3.75 Hz	DN 200 … 300 (8" … 12"): 3.125 Hz/3.75 Hz
	DN 350 … 1200 (14" … 48"):1.5625 Hz/1.875 Hz	DN 350 … 2000 (14" … 78"):1.5625 Hz/1.875 Hz
Process connection		
Flanges[1]		
• EN 1092-1	PN 10 (145 psi): DN 200 … 300 (8" … 12") Flat face	Raised face[3] (EN 1092-1, DIN 2501 and BS 4504 have the same mating dimensions)
	PN 10 (145 psi): DN 350 … 1200 (14" … 48") Raised face[3]	PN 6 (87 psi): DN 1400 … 2000 (54" … 78")
	PN 16 (232 psi): DN 50 … 300 (2" … 12") Flat face[3]	PN 10 (145 psi): DN 200 … 2000 (8" … 78")
	PN 16 (232 psi): DN 350 … 1200 (14" … 48") Raised face	PN 16 (232 psi): DN 65 … 600 (2½" … 24")
	PN 40 (580 psi): DN 15 … 40 (½" … 1½") Flat face	PN 40 (580 psi): DN 25 … 50 (1" … 2")
• ANSI B16.5	Class 150: ½" ... 12" Flat face; 14" ... 24" raised face	Class 150: 1" … 24"; Raised face
• AWWA C-207	Class D: 28" … 48", Flat face	Class D: 28" … 78", Flat face
• AS4087	PN 16 (232 psi): DN 50 ... DN 300 (2" ... 12") Flat Face; DN 350 ... DN 1200 (14" … 48") Raised face	PN 16 (232 psi): DN 50 ... DN 1200 (2" ... 48") Raised face
• JIS B 2220:2004	K10 (1" … 24")	K10 (1" … 24")
Rated Operation conditions		
Ambient temperature		
• Sensor	-40 … +70 °C (-40 … +158 °F)	-40 … +70 °C (-40 … +158 °F)
• Compact with transmitter MAG 5000/6000 [4]	-20 … +60 °C (-4 … +140 °F)	-20 … +60 °C (-4 … +140 °F)
Operating pressure (Abs) [abs. bar] (Maximum operating pressure depending on flange standard, decreases with increasing operating temperature)	DN 15 … 40 (½" … 1½"): 0.01 … 40 bar (0.15 … 580 psi)	DN 25 … 50 (1" … 2"): 0.01 … 40 bar (0.15 … 580 psi)
	DN 50 … 300 (2" … 12"): 0.03 … 20 bar (0.44 … 290 psi)	DN 65 … 1200 (2½" … 48"): 0.01 … 16 bar (0.15 … 232 psi)
	DN 350 … 1200 (14" … 48"): 0.01 … 16 bar (0.15 … 232 psi)	DN 1400 … 2000 (54" … 78"): 0.01 … 10 bar (0.15 … 145 psi)
Enclosure rating		
• Standard	IP67 to EN 60529/NEMA 4X/6 (1 mH_2O for 30 min)	IP67 to EN 60529/NEMA 4X/6 (1 mH_2O for 30 min)
• Option	IP68 to EN 60529/NEMA 6P (10 mH_2O continuously)	IP68 to EN 60529/NEMA 6P (10 mH_2O continuously)
Pressure drop	DN 15 and 25 (½" and 1"): Max. 20 mbar (0.29 psi) at 1 m/s (3 ft/s)	Insignificant
	DN 40 … 300 (1½" … 12"): Max. 25 mbar (0.36 psi) at 3 m/s (10 ft/s)	
	DN 350 … 1200 (14" … 48"): Insignificant	
Test pressure	1.5 x PN (where applicable) FM Fire Service: 2 x PN	1.5 x PN (where applicable)
Mechanical load (vibration)	18 … 1000 Hz random in x, y, z, directions for 2 hours according to EN 60068-2-36	18 … 1000 Hz random in x, y, z, directions for 2 hours according to EN 60068-2-36
	Sensor: 3.17 g RMS	Sensor: 3.17 g RMS
	Sensor with compact MAG 5000/6000 mounted transmitter: 3.17 g RMS	Sensor with compact MAG 5000/6000 mounted transmitter: 3.17 g RMS
	Sensor with compact MAG 6000 I mounted transmitter: 1.14 g RMS	Sensor with compact MAG 6000 I mounted transmitter: 1.14 g RMS
Medium conditions		
Temperature of medium		
• NBR	-10 … +70 °C (14 … 158 °F)	-
• EPDM	-10 … +70 °C (14 … 158 °F)	-
• EPDM (MI-001)	0.1 … 30 °C (32 … 76 °F)	-
• Ebonite	-	-10 … +70 °C (14 … 158 °F)
EMC	2014/30/EU	2014/30/EU

© Siemens 2021

Technical specifications (continued)

Product characteristic	MAG 5100 W (7ME6520) Mainly for the European market EPDM or NBR lining	MAG 5100 W (7ME6580) Mainly for the non-European market Ebonite lining
Design		
Material		
• Housing and flanges	Carbon steel ASTM A 105, with corrosion-resistant coatingof category C4 or C5 according to ISO 12944-2	Carbon steel ASTM A 105, with corrosion-resistant coating of category C4 or C5 according to ISO 12944-2
• Electrode	Hastelloy C276	Hastelloy C276
• Grounding electrode	Hastelloy C276	Hastelloy C276
• Terminal box	Fibre glass reinforced polyamide	Fibre glass reinforced polyamide
Certificates and approvals		
Calibration		
• Default calibration	Zero-point, 2 x 25 % and 2 x 90 %	Zero-point, 2 x 25 % and 2 x 90 %
• Special calibration	5-point calibration: 20 %, 40 %, 60 %, 80 %, 100 % of factory Q_{max}	5-point calibration: 20 %, 40 %, 60 %, 80 %, 100 % of factory Q_{max}
	10-point calibration: ascending and descending at 20 %, 40 %, 60 %, 80 %, 100 % of factory Q_{max}	10-point calibration: ascending and descending at 20 %, 40 %, 50 %, 80 %, 100 % of factory Q_{max}
	Matched pair calibration: default, 5-point or 10-point	Matched pair calibration: default, 5-point or 10-point
Custody transfer	• MI-001 cold water (EU): DN 50 ... DN 1200 (2" ... 48") • Kiwa water approval (NL): DN 50 ... DN 1200 (2" ... 48") • Chilled water pattern approval PTB K 7.2 DN 15 ... DN 1200 (Germany)[5]	-
Drinking water	EPDM liner: • WRAS (WRc, BS690 cold water, GB) • NSF/ANSI Standard 61[6] (Cold water, US) • ACS listed (F) • DVGW W270 (D) • Belgaqua (B) • AS/NZS 4020 (Australia/New Zealand)	• WRAS (WRc, BS690 cold water, GB) • NSF/ANSI Standard 61[6] (Cold water, US)
Marine[7]	• American Bureau of Shipping (ABS) • Bureau Veritas • DNV-GL • Lloyd's Register	
Hazardous areas[7]		
Standard sensor with/without MAG 5000/6000/6000 I	• FM - NI Class I Div. 2 Groups A, B, C, D - NI Class I Zone 2 Groups IIC	• FM - NI Class I Div. 2 Groups A, B, C, D - NI Class I Zone 2 Groups IIC
Pressure equipment	• PED conforming: All EN1092-1 flanges and ANSI Class 150 (< DN 300 /<12") – 2014/68/EU[9] • CRN	• PED conforming: All EN1092-1 flanges (< DN 600 /<24") – 2014/68/EU[9] • CRN
Others	• EAC (Russia, Belarus, Kazakhstan) • KCC (South Korea) • FM Fire Service Approval acc. to class 1044[8] • VdS: Extinguishing systems DN 50 ... 300 • MCERTS (GB environmental)	• EAC (Russia, Belarus, Kazakhstan) • CMC/CPA (China)

1) DN 750, DN 1050 and DN 1100 (30", 42" and 44") not available with EN 1092-1 (PN 10 and PN 16) and AS4087 flanges

2) Type 01 (SORF)

3) DN ≤ 600 type 01 (SORF); DN > 600 type 11 (WNRF)

4) Compact with transmitter MAG 5000 CT/6000 CT -20 ... +50 °C (-4 ... 122 °F)

5) For verification submit Product Variation Request

6) Including Annex G

7) In remote version with sensor size DN 50 ... DN 300 (2" ... 12")

8) For sizes larger than 600 mm (24") in PN 16 PED conformity is available as a cost-added option. The basic unit will only carry the LVD (Low Voltage Directive) and EMC approval. All products sold outside of EU and EFTA are excluded from the directive, also products sold into certain market sectors are excluded. These include:

a) Meters used in networks for the supply, distribution and discharge of water.

b) Meters used in pipelines for the conveyance of any fluid from offshore to onshore.

c) Meters used in the extraction of petroleum or gas, including Christmas tree and manifold equipment.

d) Any meter mounted on a ship or mobile offshore platform. For further information on the PED standard and requirements see Pressure Equipment Directive in Appendix (chapter 10).

9) Not for sensors with 300 µm coating.

© Siemens 2021

3

Technical specifications (continued)

MAG 5100 W (7ME6520) with MAG 6000 CT (Revenue program) MI-001

MAG 5100 W CT program is type approved according to international water meter standard OIML R 49. Since the first November 2006 the MI-001 water meter directive is in force, which means that all water meters can be sold across the EU borders if the water meters contain a MI-001 label.

The MAG 5100 W MI-001 verified and labeled products are a Class II approval according to Directive 2014/32/EU of the European Parliament and Council of 26 February, 2014 on measuring instruments, Annex III Water meters (MI-001) in the sizes from DN 50 to DN 1200 (Article No. 7ME6520).

The MID certification is obtained as a modul B + D module approval according to the above mentioned directive.

Module B: Type approval according to OIML R 49

Module D: Quality insurance approval of production

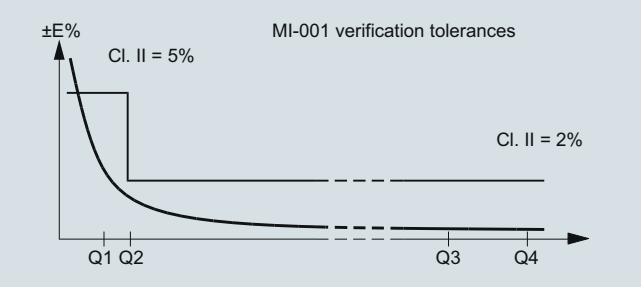

MAG 5100 W (7ME6520) with MAG 5000/MAG 6000 or MAG 6000 CT for Fire Service applications

MAG 5100 W (7ME6520) is FM Fire Service approved for automatic fire protection systems. The approval is applicable for the sizes DN 50, DN 80, DN 100, DN 150, DN 200, DN 250 and DN 300 (2", 3", 4", 6", 8", 10" and 12") with ANSI B16.5 Class 150 flanges. The FM Fire Service approved product can be ordered via the Z-options P20, P21 and P22.

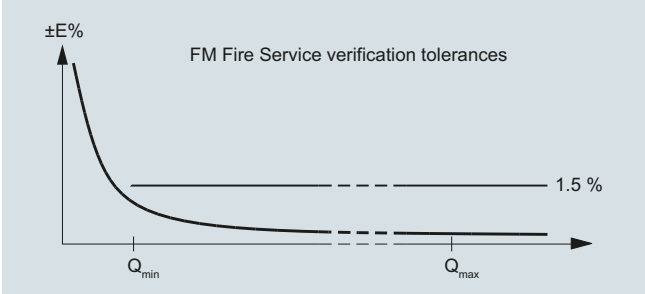

© Siemens 2021

Technical specifications (continued)

MAG 5100 W (7ME6520) MI-001 verified and labeled products at a given Q3 and Q3/Q4 = 1.25 and Q2/Q1 = 1.6 measuring ranges see table below:

Order code: P11	**DN 50 (2")**	**DN 65 (2½")**	**DN 80 (3")**	**DN 100 (4")**	**DN 125 (5")**	**DN 150 (6")**	**DN 200 (8")**	**DN 250 (10")**	**DN 300 (12")**
"R" Q3/Q1	40	40	40	40	40	40	40	40	40
Q4 [m³/h]	20	31.25	50	78.75	125	200	312.5	500	787.5
Q3 [m³/h]	**16**	**25**	**40**	**63**	**100**	**160**	**250**	**400**	**630**
Q2 [m³/h]	0.64	1.0	1.6	2.52	4.0	6.4	10.0	16.0	25.2
Q1 [m³/h]	0.4	0.63	1.0	1.58	2.5	4.0	6.25	10.0	15.75

Order code: P12	**DN 50 (2")**	**DN 65 (2½")**	**DN 80 (3")**	**DN 100 (4")**	**DN 125 (5")**	**DN 150 (6")**	**DN 200 (8")**	**DN 250 (10")**	**DN 300 (12")**
"R" Q3/Q1	63	63	63	63	63	63	63	63	63
Q4 [m³/h]	20	31.25	50	78.75	125	200	312.5	500	787.5
Q3 [m³/h]	**16**	**25**	**40**	**63**	**100**	**160**	**250**	**400**	**630**
Q2 [m³/h]	0.41	0.63	1.02	1.6	2.5	4.1	6.3	10.2	16.0
Q1 [m³/h]	0.25	0.40	0.63	1.00	1.59	2.54	3.97	6.35	10.0

Order code: P13	**DN 50 (2")**	**DN 65 (2½")**	**DN 80 (3")**	**DN 100 (4")**	**DN 125 (5")**	**DN 150 (6")**	**DN 200 (8")**	**DN 250 (10")**	**DN 300 (12")**
"R" Q3/Q1	80	80	80	80	80	80	80	80	80
Q4 [m³/h]	20	31.3	50	78.75	125	200	312.5	500	787.5
Q3 [m³/h]	**16**	**25**	**40**	**63**	**100**	**160**	**250**	**400**	**630**
Q2 [m³/h]	0.32	0.5	0.8	1.26	2.0	3.2	5.0	8.0	12,6
Q1 [m³/h]	0.20	0.31	0.50	0.79	1.25	2.00	3.13	5.00	7.9

Order code: P16	**DN 50 (2")**	**DN 65 (2½")**	**DN 80 (3")**	**DN 100 (4")**	**DN 125 (5")**	**DN 150 (6")**	**DN 200 (8")**	**DN 250 (10")**	**DN 300 (12")**
"R" Q3/Q1	160	160	160	160	160	160	160	160	160
Q4 [m³/h]	50	78.5	125	200	312.5	500	787.5	1250	2000
Q3 [m³/h]	**40**	**63**	**100**	**160**	**250**	**400**	**630**	**1000**	**1600**
Q2 [m³/h]	0.4	0.63	1.0	1.6	2.5	4.0	6.3	10.0	16.0
Q1 [m³/h]	0.25	0.39	0.63	1.0	1.56	2.5	3.94	6.3	10.0

Order code: P17	**DN 50 (2")**	**DN 65 (2½")**	**DN 80 (3")**	**DN 100 (4")**	**DN 125 (5")**	**DN 150 (6")**	**DN 200 (8")**	**DN 250 (10")**	**DN 300 (12")**
"R" Q3/Q1	200	200	200	200	200	200	200	200	200
Q4 [m³/h]	50	78.5	125	200	312.5	500	787.5	1250	2000
Q3 [m³/h]	**40**	**63**	**100**	**160**	**250**	**400**	**630**	**1000**	**1600**
Q2 [m³/h]	0.32	0.50	0.80	1.28	2.0	3.2	5.0	8.0	12.8
Q1 [m³/h]	0.2	0.32	0.50	0.8	1.25	2.0	3.15	5.0	8.0

Order code: P18	**DN 50 (2")**	**DN 65 (2½")**	**DN 80 (3")**	**DN 100 (4")**	**DN 125 (5")**	**DN 150 (6")**	**DN 200 (8")**	**DN 250 (10")**	**DN 300 (12")**
"R" Q3/Q1	250	250	250	250	250	250	250	250	250
Q4 [m³/h]	50	78.5	125	200	312.5	500	787.5	1250	2000
Q3 [m³/h]	**40**	**63**	**100**	**160**	**250**	**400**	**630**	**1000**	**1600**
Q2 [m³/h]	0.26	0.4	0.64	1.02	1.6	2.56	4.0	6.4	10.24
Q1 [m³/h]	0.16	0.25	0.4	0.64	1.0	1.6	2.52	4.0	6.4

Order code: P24	**DN 350 (14")**	**DN 400 (16")**	**DN 450 (18")**	**DN 500 (20")**	**DN 600 (24")**
"R" Q3/Q1	40	40	40	40	40
Q4 [m³/h]	1250	1250	2000	2000	3125
Q3 [m³/h]	**1000**	**1000**	**1600**	**1600**	**2500**
Q2 [m³/h]	40.0	40.0	64.0	64.0	100.0
Q1 [m³/h]	25.0	25.0	40.0	40.0	62.5

Order code: P25	**DN 350 (14")**	**DN 400 (16")**	**DN 450 (18")**	**DN 500 (20")**	**DN 600 (24")**
"R" Q3/Q1	63	63	63	63	63
Q4 [m³/h]	1250	2000	3125	3125	5000
Q3 [m³/h]	**1000**	**1600**	**2500**	**2500**	**4000**
Q2 [m³/h]	25.4	40.63	63.49	63.49	101.6
Q1 [m³/h]	15.9	25.4	39.7	39.7	63.49

© Siemens 2021

3

Technical specifications (continued)

Order code: P26	DN 350 (14")	DN 400 (16“)	DN 450 (18“)	DN 500 (20“)	DN 600 (24“)
“R” Q3/Q1	80	80	80	80	80
Q4 [m³/h]	2000	3125	5000	5000	7875
Q3 [m³/h]	**1600**	**2500**	**4000**	**4000**	**6300**
Q2 [m³/h]	32.0	50.0	80.0	80.0	126.0
Q1 [m³/h]	20.0	31.25	50.0	50.0	78.75

Order code: P27	DN 350 (14")	DN 400 (16“)	DN 450 (18“)	DN 500 (20“)	DN 600 (24“)
“R” Q3/Q1	100	100	100	100	100
Q4 [m³/h]	3125	3125	5000	5000	7875
Q3 [m³/h]	**2500**	**2500**	**4000**	**4000**	**6300**
Q2 [m³/h]	40.0	2540.0	64.0	64.0	100.8
Q1 [m³/h]	25.0	25.0	40.0	40.0	63.0

Order code: P29	DN 700 (28“)	DN 750 (30“)	DN 800 (32“)	DN 900 (36“)	DN 1000 (40“)	DN 1200 (48“)
“R” Q3/Q1	40	40	40	40	40	40
Q4 [m³/h]	5000	5000	5000	7875	7875	7875
Q3 [m³/h]	**4000**	**4000**	**4000**	**6300**	**6300**	**6300**
Q2 [m³/h]	160.0	160.0	160.0	252.0	252.0	252.0
Q1 [m³/h]	100.0	100.0	100.0	157.5	157.5	157.5

Order code: P30	DN 700 (28“)	DN 750 (30“)	DN 800 (32“)	DN 900 (36“)	DN 1000 (40“)	DN 1200 (48“)
“R” Q3/Q1	63	63	63	63	63	-
Q4 [m³/h]	5000	5000	5000	7875	7875	-
Q3 [m³/h]	**4000**	**4000**	**4000**	**6300**	**6300**	**-**
Q2 [m³/h]	101.6	101.6	101.6	160.0	160.0	-
Q1 [m³/h]	63.5	63.5	63.5	100.0	100.0	-

Order code: P31	DN 700 (28“)	DN 750 (30“)	DN 800 (32“)	DN 900 (36“)	DN 1000 (40“)	DN 1200 (48“)
“R” Q3/Q1	80	80	80	80	80	-
Q4 [m³/h]	5000	5000	5000	7875	7875	-
Q3 [m³/h]	**4000**	**4000**	**4000**	**6300**	**6300**	**-**
Q2 [m³/h]	80.0	80.0	80.0	126.0	126.0	-
Q1 [m³/h]	50.0	50.0	50.0	78.75	78.75	-

The label is placed on the transmitter housing. An example of the product label is shown below:

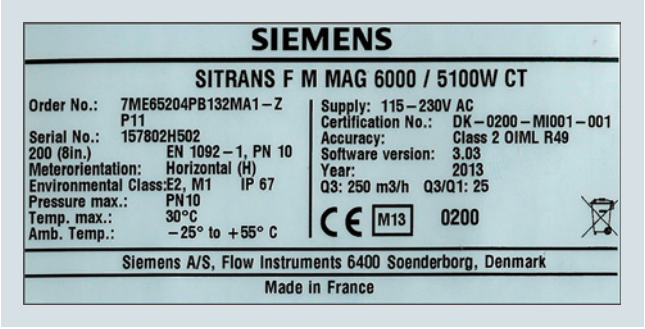

OIML R 49/MI-001 approvals valid for:

- DN 50 to 1200 mm (2” to 48”)
- Horizontal and vertical installation
- Compact or remote with max. 500 m cable
- Power supply 115 to 230 V AC, 12 to 24 V AC/DC
- With or without communication module

Other restrictions may apply (see certificate)

Special OIML / MI-001 settings:

- Unit: m³
- Qmax: Q3
- Low flow cut-off: 0.1 %
- Digital output: Frequency

For other factory settings, see Operating Instructions.

© Siemens 2021

Selection and ordering data

Article No. **7ME6520-** _ _ _ _ _ - 2 _ _ _ Ord. code _ _ _

Sensor SITRANS FM MAG 5100 W ↗
Hastelloy electrodes, carbon steel flanges, EU water markets and low flow applications

↗ Click on the Article No. for the online configuration in the PIA Life Cycle Portal.

Diameter	
DN 15 (½“)	1 V
DN 25 (1“)	2 D
DN 40 (1½“)	2 R
DN 50 (2“)	2 Y
DN 65 (2½“)	3 F
DN 80 (3“)	3 M
DN 100 (4“)	3 T
DN 125 (5“)	4 B
DN 150 (6“)	4 H
DN 200 (8“)	4 P
DN 250 (10“)	4 V
DN 300 (12“)	5 D
DN 350 (14“)	5 K
DN 400 (16“)	5 R
DN 450 (18“)	5 Y
DN 500 (20“)	6 F
DN 600 (24“)	6 P
DN 700 (28“)	6 Y
DN 750 (30“)	7 D
DN 800 (32“)	7 H
DN 900 (36“)	7 M
DN 1000 (40“)	7 R
(42“)	7 U
(44“)	7 V
DN 1200 (48“)	8 B
Flange norm and pressure rating	
EN 1092-1	
PN 10 (DN 200 ... 1200/8“ ... 48“)	B
PN 16 (DN 50 ... 1200/2“ ... 48“)	C
PN 16, non PED (DN 700 ... 1200/28“ ... 48“)	D
PN 40 (DN 15 ... 40/½“ ... 1½“)	F
ANSI B16.5	
class 150 (½“ ... 24“)	J
AWWA C-207	
Class D (28“ ... 48“)	L
AS 4087	
PN 16 (DN 50 ... 1200/2“ ... 48“)	N
JIS	
B 2220:2004 K10 (1" ... 24")	R
Flange material and coating	
Carbon steel flanges ASTM A 105, corrosion-resistant coating of category C4	1
Carbon steel flanges ASTM A 105, 300 µm corrosion-resistant coating of category C5	4
Liner material	
EPDM	2
NBR	3

Article No. **7ME6520-** _ _ _ _ _ - 2 _ _ _ Ord. code _ _ _

Sensor SITRANS FM MAG 5100 W
Hastelloy electrodes, carbon steel flanges, EU water markets and low flow applications

Transmitter	
Sensor for remote transmitter (Order transmitter separately)	A
MAG 6000 I, Aluminum, 18 ... 90 V DC, 115 ... 230 V AC	C
MAG 6000, Polyamid, 11 ... 30 V DC/11 ... 24 V AC	H
MAG 6000, Polyamid, 115 ... 230 V AC	J
MAG 5000, Polyamid, 11 ... 30 V DC/11 ... 24 V AC	K
MAG 5000, Polyamid, 115 ... 230 V AC	L
MAG 6000 CT, Polyamid, 115 ... 230 V AC	M
MAG 6000 CT, Polyamid, 11 ... 30 V DC/11 ... 24 V AC	R
Transmitter including wall-mounting kit for remote design	
MAG 5000, Polyamid, 115 ... 230 V AC, incl. special wall-mounting unit (approved marine equipment)	
• M20x1.5 cable glands	Z P 0 C
• ½" NPT cable glands	Z P 0 D
MAG 6000, Polyamid, 115 ... 230 V AC, incl. special wall-mounting unit (approved marine equipment)	
• M20x1.5 cable glands	Z P 0 G
• ½" NPT cable glands	Z P 0 H
MAG 6000 CT, Polyamid, 11 ... 30 V DC/11 ... 24 V AC, incl. wall-mounting unit	
• M20x1.5 cable glands	Z P 0 J
• ½" NPT cable glands	Z P 0 K
MAG 6000 CT, Polyamid, 115 ... 230 V AC, incl. wall-mounting unit	
• M20x1.5 cable glands	Z P 0 L
• ½" NPT cable glands	Z P 0 M
Communication	
None	A
HART	B
PROFIBUS PA Profile 3 (only MAG 6000/ MAG 6000 I)	F
PROFIBUS DP Profile 3 (only MAG 6000/ MAG 6000 I)	G
Modbus RTU/RS 485 (only MAG 6000/ MAG 6000 I)	E
FOUNDATION Fieldbus H1 (only MAG 6000/ MAG 6000 I)	J
Cable glands/terminal box	
Metric: Polyamide terminal box or MAG 6000 I compact	1
½" NPT: Polyamide terminal box or MAG 6000 I compact	2

© Siemens 2021

3

Selection and ordering data — Order code

Additional information

Please add "**-Z**" to Article No. and specify Order code(s) and plain text.

Certificates

• Pressure test certificate according to EN 10204-3.1	**C01**
• Material certificate according to EN 10204-3.1	**C12**
• Factory certificate according to EN 10204-2.2	**C14**
• Factory certificate according to EN 10204-2.1	**C15**

Special calibration

• 5-point calibration for DN 15 ... DN 200[1)]	**D01**
• 5-point calibration for DN 250 ... DN 600[1)]	**D02**
• 5-point calibration for DN 700 ... DN 1200[1)]	**D03**
• 10-point calibration for DN 15 ... DN 200[2)]	**D06**
• 10-point calibration for DN 250 ... DN 600[2)]	**D07**
• 10-point calibration for DN 700 ... DN 1200[2)]	**D08**
• Default (2 x 25 % and 2 x 90 %) matched-pair calibration for DN 15 ... DN 200	**D11**
• Default (2 x 25 % and 2 x 90 %) matched-pair calibration for DN 250 ... DN 600	**D12**
• Default (2 x 25 % and 2 x 90 %) matched-pair calibration for DN 700 ... DN 1200	**D13**
• 5-point, matched-pair calibration for DN 15 ... DN 200[1)]	**D15**
• 5-point, matched-pair calibr. for DN 250 ... DN 600[1)]	**D16**
• 5-point, matched-pair calibr. for DN 700 ... DN 1200[1)]	**D17**
• 10-point, matched-pair calibration for DN 15 ... DN 200[2)]	**D18**
• 10-point, matched-pair calibr. for DN 250 ... DN 600[2)]	**D19**
• 10-point, matched-pair calibr. for DN 700 ... DN 1200[2)]	**D20**
• Accredited 5-point matched-pair calibration acc. to ISO 17025 DN 15 ... DN 200	**D21**
• Accredited 5-point matched-pair calibration acc. to ISO 17025 DN 250 ... DN 600	**D22**
• Accredited 5-point matched-pair calibration acc. to ISO 17025 DN 600 ... DN 1200	**D23**

Country of origin

• France	**F55**

Sensor cables

• Standard coil and electrode cable, PVC jacket	
- 5 m (16 ft)	**K01**
- 10 m (33 ft)	**K02**
- 20 m (65 ft)	**K04**
- 30 m (98 ft)	**K06**
- 40 m (131 ft)	**K07**
- 50 m (164 ft)	**K08**
- 60 m (197 ft)	**K09**
- 100 m (328 ft)	**K10**
- 150 m (492 ft)	**K11**
- 200 m (656 ft)	**K12**
- 500 m (1640 ft)	**K13**
• Standard coil and special electrode cable, PVC jacket	
- 5 m (16 ft)	**K51**
- 10 m (33 ft)	**K52**
- 20 m (65 ft)	**K54**
- 30 m (98 ft)	**K56**
- 40 m (131 ft)	**K57**
- 50 m (164 ft)	**K58**
- 60 m (197 ft)	**K59**
- 100 m (328 ft)	**K60**
- 150 m (492 ft)	**K61**
- 200 m (656 ft)	**K62**
- 500 m (1640 ft)	**K63**

Terminal blocks

• Factory mounted terminal blocks	**N02**

Order code

Additional information

Please add "**-Z**" to Article No. and specify Order code(s) and plain text.

Approval/Verification[3)]

• Without verification acc. to OIML R 49 (DN 50 ... DN 300)	**P10**
• MI-001 Q3/Q1 = 40 (DN 50 ... DN 300)	**P11**
• MI-001 Q3/Q1 = 63 (DN 50 ... DN 300)	**P12**
• MI-001 Q3/Q1 = 80 (DN 50 ... DN 300)	**P13**
• MI-001 Q3/Q1 = 160 (DN 50 ... DN 300)	**P16**
• MI-001 Q3/Q1 = 200 (DN 50 ... DN 300)	**P17**
• MI-001 Q3/Q1 = 250 (DN 50 ... DN 300)	**P18**
• Without verification according to OIML R 49 (DN 350 ... DN 600)	**P23**
• MI-001 Q3/Q1 = 40 (DN 350 ... DN 600)	**P24**
• MI-001 Q3/Q1 = 63 (DN 350 ... DN 600)	**P25**
• MI-001 Q3/Q1 = 80 (DN 350 ... DN 600)	**P26**
• MI-001 Q3/Q1 = 100 (DN 350 ... DN 600)	**P27**
• Without verification according to OIML R 49 (DN 700 ... DN 1200)	**P28**
• MI-001 Q3/Q1 = 40 (DN 700 ... DN 1200)	**P29**
• MI-001 Q3/Q1 = 63 (DN 700 ... DN 1200)	**P30**
• MI-001 Q3/Q1 = 80 (DN 700 ... DN 1200)	**P31**
• PTB K7.2 QP/QI=25 (DN 15 ... DN 300)	**P41**
• PTB K7.2 QP/QI=50 (DN 15 ... DN 300)	**P42**
• PTB K7.2 QP/QI=100 Low dynamic range (DN 15 ... DN 300)	**P43**
• PTB K7.2 QP/QI=100 High dynamic range (DN 15 ... DN 300)	**P44**
• PTB K7.2 QP/QI=250 (DN 50 ... DN 300)	**P45**
• PTB K7.2 QP/QI=25 (DN 350 ... DN 600)	**P47**
• PTB K7.2 QP/QI=50 (DN 350 ... DN 600)	**P48**
• PTB K7.2 QP/QI=100 Low dynamic range (DN 350 ... DN 600)	**P49**

Pulse output setting

Volume / Pulse	
• 0.001 l/pulse	**L01**
• 0.01 l/pulse	**L02**
• 0.1 l/pulse	**L03**
• 0.5 l/pulse	**L04**
• 1 l/pulse	**L05**
• 5 l/pulse	**L06**
• 10 l/pulse	**L07**
• 50 l/pulse	**L08**
• 100 l/pulse	**L09**
• 500 l/pulse	**L10**
• 1 m^3/pulse	**L11**
• 5 m^3/pulse	**L12**
• 10 m^3/pulse	**L13**
• 50 m^3/pulse	**L14**
• 100 m^3/pulse	**L15**
• 500 m^3/pulse	**L16**
• 1000 m^3/pulse	**L17**
	L17
Pulse width	
• 2 ms	**L61**
• 5 ms	**L62**
• 10 ms	**L63**
• 20 ms	**L64**
• 50 ms	**L65**
• 100 ms	**L66**
• 200 ms	**L67**
• 500 ms	**L68**

FM Fire Service Approval (with ANSI B16.5 Class 150 flanges)

• DN 50, DN 80 and DN 100 (2", 3" and 4")	**P20**
• DN 150 and DN 200 (6" and 8")	**P21**
• DN 250 and DN 300 (10" and 12")	**P22**

© Siemens 2021

Selection and ordering data

	Article No.
Additional information	
Please add "**-Z**" to Article No. and specify Order code(s) and plain text.	
Country specific label	Order code
FP2E label (France)	**H20**
ADDC label (Abu Dhabi)	**H23**
CRN (Canadian Registration Number)	**H25**
Tag name plate, stainless steel (specify in plain text)	**Y17**
Tag name plate, plastic (self-adhesive)	**Y18**
Customer-specific transmitter setting	**Y20**
Factory mounted sensor cables	
• Sensor cables wired (specify Article No. for sensor cables and order cables separately or specify K-option)	**Y40**
• Sensor cables wired and IP68 sealing (specify Article No. for sensor cables and order cables separately or specify K-option)	**Y41**
Additional calibrations	
• Customer-witnessed calibration Any of above calibration	**On request**[4]

[1] 20 %, 40 %, 60 %, 80 %, 100 % of factory Q_{max}

[2] Ascending and descending at 20 %, 40 %, 60 %, 80 %, 100 % of factory Q_{max}

[3] For more details and references of the ranges please see the tables on page 3/95.

[4] Product Variation Request (PVR)

Sensor SITRANS FM MAG 5100 W ↗	**7ME6580-**
Hastelloy electrodes, carbon steel flanges, Non EU water markets	-
↗ Click on the Article No. for the online configuration in the PIA Life Cycle Portal.	
Diameter	
DN 25 (1")	**2 D**
DN 40 (1½")	**2 R**
DN 50 (2")	**2 Y**
DN 65 (2½")	**3 F**
DN 80 (3")	**3 M**
DN 100 (4")	**3 T**
DN 125 (5")	**4 B**
DN 150 (6")	**4 H**
DN 200 (8")	**4 P**
DN 250 (10")	**4 V**
DN 300 (12")	**5 D**
DN 350 (14")	**5 K**
DN 400 (16")	**5 R**
DN 450 (18")	**5 Y**
DN 500 (20")	**6 F**
DN 600 (24")	**6 P**
DN 700 (28")	**6 Y**
DN 750 (30")	**7 D**
DN 800 (32")	**7 H**
DN 900 (36")	**7 M**
DN 1000 (40")	**7 R**
DN 1050 (42")	**7 U**
DN 1100 (44")	**7 V**
DN 1200 (48")	**8 B**
DN 1400 (54")	**8 F**
DN 1500 (60")	**8 K**
DN 1600 (66")	**8 P**
DN 1800 (72")	**8 T**
DN 2000 (78")	**8 Y**

Sensor SITRANS FM MAG 5100 W	**7ME6580-**
Hastelloy electrodes, carbon steel flanges, Non EU water markets	-
Flange norm and pressure rating	
EN 1092-1	
PN 6 (DN 1400 ... 2000 (54" ... 78"))[1]	**A**
PN 10 (DN 200 ... 2000 (8" ... 78"))[1]	**B**
PN 16 (DN 65 ... 600 (2½" ... 24"))	**C**
PN 16, non-PED (DN 700 ... 2000 (28" ... 78"))	**D**
PN 40 (DN 25 ... 50 (1" ... 2"))	**F**
ANSI B16.5	
Class 150 (1" ... 24")	**J**
AWWA C-207	
Class D (28" ... 78")[1]	**L**
AS 4087	
PN 16 (DN 50 ... 1200 (2" ... 48"))	**N**
JIS	
B 2220:2004 K10 (1" ... 24")	**R**
Flange material and coating	
Carbon steel flanges ASTM A 105, corrosion-resistant coating of category C4	**1**
Carbon steel flanges ASTM A 105, 300 µm corrosion-resistant coating of category C5	**4**
Liner material	
Ebonite	**4**
Electrode material	
Hastelloy	**2**
Transmitter	
Sensor for remote transmitter (Order transmitter separately)	**A**
MAG 6000, Polyamid, 11 ... 30 V DC/11 ... 24 V AC	**H**
MAG 6000, Polyamid, 115 ... 230 V AC	**J**
MAG 5000, Polyamid, 11 ... 30 V DC/11 ... 24 V AC	**K**
MAG 5000, Polyamid, 115 ... 230 V AC	**L**
Communication	
No communication, add-on possible	**A**
HART	**B**
PROFIBUS PA Profile 3 (only MAG 6000)	**F**
PROFIBUS DP Profile 3 (only MAG 6000)	**G**
Modbus RTU/RS 485 (only MAG 6000)	**E**
FOUNDATION Fieldbus H1 (only MAG 6000)	**J**
Cable glands/terminal box	
Metric: Polyamide terminal box or MAG 6000 I compact	**1**
½" NPT: Polyamide terminal box or MAG 6000 I compact	**2**

[1] DN 1400 to DN 2000 (54" to 78") do not conform to PED or CRN.

© Siemens 2021

Selection and ordering data

	Order code
Additional information	
Please add "**-Z**" to Article No. and specify Order code(s) and plain text.	
Certificates	
Pressure test certificate according to EN 10204-3.1	**C01**
Factory certificate according to EN 10204-2.2	**C14**
Factory certificate according to EN 10204-2.1	**C15**
Special calibration	
• 5-point calibration for DN 15 ... DN 200[1)]	**D01**
• 5-point calibration for DN 250 ... DN 600[1)]	**D02**
• 5-point calibration for DN 700 ... DN 1200[1)]	**D03**
• 10-point calibration for DN 15 ... DN 200[2)]	**D06**
• 10-point calibration for DN 250 ... DN 600[2)]	**D07**
• 10-point calibration for DN 700 ... DN 1200[2)]	**D08**
• Default (2 x 25 % and 2 x 90 %) match-pair calibration for DN 15 ... DN 200	**D11**
• Default (2 x 25 % and 2 x 90 %) match-pair calibration for DN 250 ... DN 600	**D12**
• Default (2 x 25 % and 2 x 90 %) match-pair calibration for DN 700 ... DN 1200	**D13**
• 5-point, matched-pair calibration for DN 15 ... DN 200[1)]	**D15**
• 5-point, matched-pair calibration for DN 250 ... DN 600[1)]	**D16**
• 5-point, matched-pair calibration for DN 700 ... DN 1200[1)]	**D17**
• 10-point, matched-pair calibration for DN 15 ... DN 200[2)]	**D18**
• 10-point, matched-pair calibration for DN 250 ... DN 600[2)]	**D19**
• 10-point, matched-pair calibration for DN 700 ... DN 1200[2)]	**D20**
Terminal blocks	
• Factory mounted terminal blocks	**N02**
Country specific label	
CRN (Canadian Registration Number)	**H25**
Tag name plate, stainless (specify in plain text)	**Y17**
Tag name plate, plastic (self-adhesive)	**Y18**
Customer-specific transmitter setting	**Y20**
Factory mounted sensor cables	
• Sensor cables wired (specify Article No. for sensor cables and order cables separately)	**Y40**
• Sensor cables wired and IP68 sealing (specify Article No. for sensor cables and order cables separately)	**Y41**

1) 20 %, 40 %, 60 %, 80 %, 100 % of factory Q_{max}

2) Ascending and descending at 20 %, 40 %, 60 %, 80 %, 100 % of factory Q_{max}

Operating instructions for SITRANS FM MAG 5100 W

Description	Article No.
• English	**A5E03063678**
• German	**A5E03376527**

All literature is available to download for free, in a range of languages, at
http://www.siemens.com/processinstrumentation/documentation

Accessories

Description	Article No.	
Potting kit for IP68/NEMA 6P sealing of sensor junction box	**FDK:085U0220**	

MAG 5000/6000 transmitters and sensors are packed in separate boxes, the final assembly takes place during installation at the customer's place. MAG 6000 I transmitters and sensors are delivered compact mounted from factory. Communication module will be pre-mounted in the transmitter.

Please use online Product selector to get latest updates:

http://www.pia-selector.automation.siemens.com

© Siemens 2021

Dimensional drawings

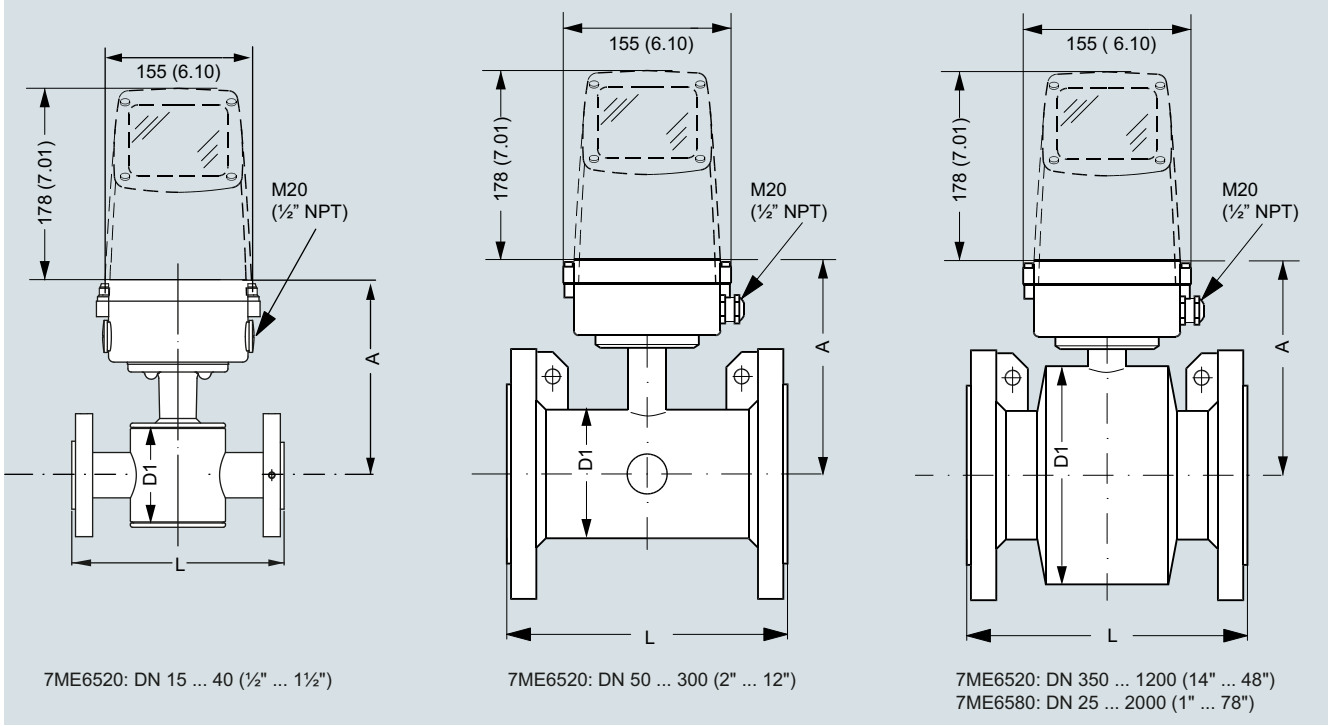

7ME6520: DN 15 ... 40 (½" ... 1½")

7ME6520: DN 50 ... 300 (2" ... 12")

7ME6520: DN 350 ... 1200 (14" ... 48")
7ME6580: DN 25 ... 2000 (1" ... 78")

		7ME6520 NBR or EPDM liner				7ME6580 Ebonite liner					
Nominal size		A		D1		A		D1		L[1]	
[mm]	[inch]	[mm]	[inch]	[mm]	[inch]	[mm]	[inch]	[mm]	[inch]	[mm]	[inch]
15	½	177	7.0	77	3.0	-	-	-	-	200	7.9
25	1	187	7.4	96	3.8	187	7.4	104	4.09	200	7.9
40	1½	202	8.0	127	5.0	197	7.8	124	4.88	200	7.9
50	2	188	7.4	76	3.0	205	8.1	139	5.47	200	7.9
65	2½	194	7.6	89	3.5	212	8.3	154	6.06	200	7.9
80	3	200	7.9	102	4.0	222	8.7	174	6.85	200	7.9
100	4	207	8.1	114	4.5	242	9.5	214	8.43	250	9.8
125	5	217	8.5	140	5.5	255	10.0	239	9.41	250	9.8
150	6	232	9.1	168	6.6	276	10.9	282	11.1	300	11.8
200	8	257	10.1	219	8.6	304	12.0	338	13.31	350	13.8
250	10	284	11.2	273	10.8	332	13.1	393	15.47	450	17.7
300	12	310	12.2	324	12.8	357	14.1	444	17.48	500	19.7
350	14	382	15.0	451	17.8	362	14.3	451	17.76	550	21.7
400	16	407	16.0	502	19.8	387	15.2	502	19.76	600	23.6
450	18	438	17.2	563	22.2	418	16.5	563	22.16	600	23.6
500	20	463	18.2	614	24.2	443	17.4	614	24.17	600	23.6
600	24	514	20.2	715	28.2	494	19.4	715	28.15	600	23.6
700	28	564	22.2	816	32.1	544	21.4	816	32.13	700	27.6
750	30	591	23.3	869	34.2	571	22.5	869	34.21	750	29.5
800	32	616	24.3	927	36.5	606	23.9	927	36.5	800	31.5
900	36	663	26.1	1032	40.6	653	25.7	1032	40.63	900	35.4
1000	40	714	28.1	1136	44.7	704	27.7	1136	44.72	1000	39.4
	42	714	28.1	1136	44.7	704	27.7	1136	44.72	1000	39.4
	44	765	30.1	1238	48.7	755	29.7	1238	48.74	1100	43.3
1200	48	820	32.3	1348	53.1	810	31.9	1348	53.07	1200	47.2
1400	54	-	-	-	-	925	36.4	1574	65.94	1400	55.1
1500	60	-	-	-	-	972	38.2	1672	65.83	1500	59.1
1600	66	-	-	-	-	1025	40.4	1774	75.39	1600	63.0
1800	72	-	-	-	-	1123	44.2	1974	77.72	1800	70.9
2000	78	-	-	-	-	1223	48.1	2174	85.59	2000	78.7

[1] Tolerances on built-in length:
DN 15 to DN 200 (½" to 8"): +0/-3 mm (+0/-0.12"), DN 250 to DN 400 (10" to 16"): +0/-5 mm (+0/-0.20"),
DN 450 to DN 600 (18" to 24"): +5/-5 mm (+0.20/-0.20"), DN 700 to DN 2000 (28" to 78"): +10/-10 mm (+0.39/-0.39")

© Siemens 2021

3

Dimensional drawings (continued)

MAG 5100 W/6000 I Compact

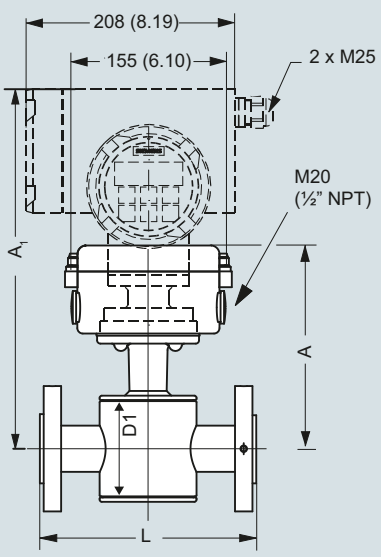

7ME6520: DN 15 ... 40 (½" ... 1½")

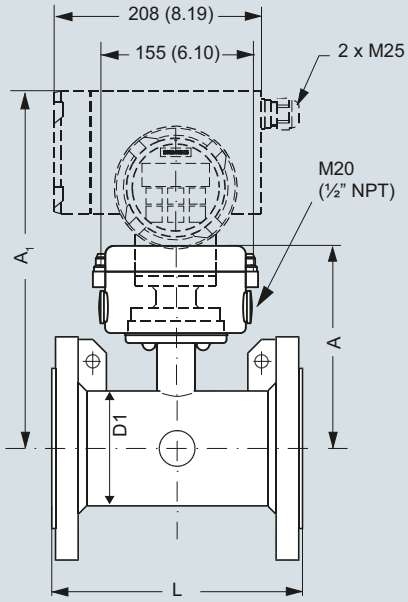

7ME6520: DN 50 ... 300 (2" ... 12")

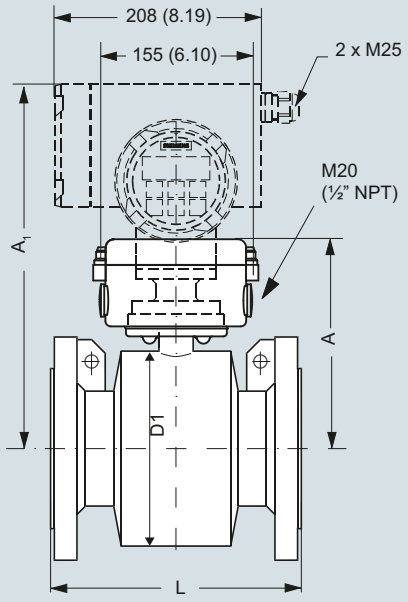

7ME6520: DN 350 ... 2000 (14" ... 78")
7ME6580: DN 25 ... 2000 (1" ... 78")

Nominal size		7ME6520 NBR or EPDM liner						7ME6580 Ebonite liner							
		A		A1		D1		A		A1		D1		L[1]	
[mm]	[inch]	[mm]	[inch]	[mm]	[inch]	[mm]	[inch]	[mm]	[inch]	[mm]	[inch]	[mm]	[inch]	[mm]	[inch]
15	½	177	7.0	331	13.0	77	3.0	187	7.4	-	-	-	-	200	7.9
25	1	187	7.4	341	13.4	96	3.8	187	7.4	341	13.4	104	4.09	200	7.9
40	1½	202	8.0	356	14.0	127	5.0	197	7.8	351	13.8	124	4.88	200	7.9
50	2	188	7.4	342	13.5	76	3.0	205	8.1	359	14.1	139	5.47	200	7.9
65	2½	194	7.6	348	13.7	89	3.5	212	8.3	366	14.4	154	6.06	200	7.9
80	3	200	7.9	354	14.0	102	4.0	222	8.7	376	14.8	174	6.85	200	7.9
100	4	207	8.1	361	14.2	114	4.5	242	9.5	396	15.6	214	8.43	250	9.8
125	5	217	8.5	371	14.6	140	5.5	255	10.0	409	16.1	239	9.41	250	9.8
150	6	232	9.1	386	15.2	168	6.6	276	10.9	430	16.9	282	11.1	300	11.8
200	8	257	10.1	411	16.2	219	8.6	304	12.0	458	18.0	338	13.31	350	13.8
250	10	284	11.2	438	17.2	273	10.8	332	13.1	486	19.1	393	15.47	450	17.7
300	12	310	12.2	464	18.3	324	12.8	357	14.1	511	20.1	444	17.48	500	19.7
350	14	382	15.0	536	21.1	451	17.8	362	14.3	516	20.3	451	17.76	550	21.7
400	16	407	16.0	561	22.1	502	19.8	387	15.2	541	21.3	502	19.76	600	23.6
450	18	438	17.2	592	23.3	563	22.2	418	16.5	572	22.5	563	22.16	600	23.6
500	20	463	18.2	617	24.3	614	24.2	443	17.4	597	23.5	614	24.17	600	23.6
600	24	514	20.2	668	26.3	715	28.2	494	19.4	648	25.5	715	28.15	600	23.6
700	28	564	22.2	718	28.3	816	32.1	544	21.4	698	27.5	816	32.13	700	27.6
750	30	591	23.3	745	29.3	869	34.2	571	22.5	725	28.5	869	34.21	750	29.5
800	32	616	24.3	770	30.3	927	36.5	606	23.9	760	29.9	927	36.5	800	31.5
900	36	663	26.1	817	32.2	1032	40.6	653	25.7	807	31,8	1032	40.63	900	35.4
1000	40	714	28.1	868	34.2	1136	44.7	704	27.7	858	33.8	1136	44.72	1000	39.4
	42	714	28.1	868	34.2	1136	44.7	704	27.7	858	33.8	1136	44.72	1000	39.4
	44	765	30.1	919	36.2	1238	48.7	755	29.7	904	35.6	1238	48.74	1100	43.3
1200	48	820	32.3	974	38.3	1348	53.1	810	31.9	964	38.0	1348	53.07	1200	47.2
1400	54	-	-	-	-	-	-	925	36.4	1079	42.5	1574	61.97	1400	55.1
1500	60	-	-	-	-	-	-	972	38.2	1126	44.3	1672	65.83	1500	59.1
1600	66	-	-	-	-	-	-	1025	40.4	1179	46.4	1774	59.84	1600	63.0
1800	72	-	-	-	-	-	-	1123	44.2	1277	50.3	1974	77.72	1800	70.9
2000	78	-	-	-	-	-	-	1223	48.1	1377	54.2	2174	85.59	2000	78.7

[1] Tolerances on built in length:
DN 15 to DN 200 (½" to 8"): +0/-3 mm (+0/-0.12"), DN 250 to DN 400 (10" to 16"): +0/-5 mm (+0/-0.20")
DN 450 to DN 600 (18" to 24"): +5/-5 mm (+0.20/-0.20"), DN 700 to DN 2000 (28" to 78"): +10/-10 mm (+0.39/-0.39")

© Siemens 2021

Dimensional drawings (continued)

		7ME6520 NBR or EPDM liner										7ME6580 Ebonite liner			
Nominal size DN		PN 10		PN 16		PN 40		Class 150/AWWA		AS		PN 16		JIS 10K	
[mm]	[inch]	[kg]	[ibs]	[kg]	[ibs]	[kg]	[ibs]	[kg]	[ibs]	[kg]	[ibs]	[kg]	[lbs]	[kg]	[lbs]
15	½	-	-	-	-	4	9	4	9	4	9	5	11	4.18	9.22
25	1	-	-	-	-	6	12	5	11	4	9	5	11	5.68	12.52
40	1½	-	-	-	-	8	18	7	15	7	15	8	17	7.52	16.58
50	2	-	-	9	20	-	-	8	20	9	20	9	20	8.18	18.03
65	2½	-	-	10.7	24	-	-	11	24	10.7	24	11	24	9.44	20.81
80	3	-	-	11.6	26	-	-	13	28	11.6	26	12	26	10.46	23.06
100	4	-	-	15.2	33	-	-	19	41	15.2	33	16	35	13.7	30.20
125	5	-	-	20.4	45	-	-	24	52	-	-	19	42	20.22	44.58
150	6	-	-	26	57	-	-	29	64	26	57	27	60	24.1	53.13
200	8	48	106	48	106	-	-	56	124	48	106	40	88	43.42	95.72
250	10	64	141	69	152	-	-	79	174	69	152	60	132	63.64	140.30
300	12	76	167	86	189	-	-	110	243	86	189	80	176	72.62	160.01
350	14	104	229	125	274	-	-	139	307	115	254	110	242	-	-
400	16	119	263	143	314	-	-	159	351	125	277	125	275	-	-
450	18	136	299	173	381	-	-	182	400	141	311	175	385	-	-
500	20	163	359	223	491	-	-	225	495	189	418	200	440	-	-
600	24	236	519	338	744	-	-	320	704	301	664	287	633	-	-
700	28	270	595	314	692	-	-	273	602	320	704	330	728	-	-
750	30	-	-	-	-	-	-	329	725	-	-	360	794	-	-
800	32	346	763	396	873	-	-	365	804	428	944	450	992	-	-
900	36	432	951	474	1043	-	-	495	1089	619	1362	530	1168	-	-
1000	40	513	1130	600	1321	-	-	583	1282	636	1399	660	1455	-	-
	42	-	-	-	-	-	-	687	1512	-	-	-	-	-	-
	44	-	-	-	-	-	-	763	1680	-	-	1140	2513	-	-
1200	48	643	1415	885	1948	-	-	861	1896	813	1789	1180	2601	-	-
1400	54	1592	3510	-	-	-	-	-	-	-	-	1600	3528	-	-
1500	60	-	-	-	-	-	-	-	-	-	-	2460	5423	-	-
1600	66	2110	4652	-	-	-	-	-	-	-	-	2525	5566	-	-
1800	72	2560	5644	-	-	-	-	-	-	-	-	2930	6460	-	-
2000	78	3640	8025	-	-	-	-	-	-	-	-	3665	8080	-	-

With transmitter MAG 5000 and MAG 6000 compact, weight is increased by approximately 0.8 kg (1.8 lbs), with MAG 6000 I, weight is increased by 5.5 kg (12.1 lb).

© Siemens 2021

SITRANS FM100

Overview



The SITRANS FM100 is an electromagnetic flow sensor in a compact design for basic applications in the process and OEM industry.

Benefits

- Connection ½", ¾", 1", 2"
- Flow- and temperature measurement
- IO-Link communication
- Dosing function with external control output
- Colored, multi-parameter configurable TFT display, rotatable 90°
- Bidirectional measuring
- Intuitive setup menu via 4 optical touch keys
- 2 freely configurable outputs
- All-metal design: stainless steel
- Included in Quick Ship Program (delivery time see PIA LCP)

Application

The main applications of the SITRANS FM electromagnetic flow sensors can be found in the following fields:

- OEM industry
- Process industry
- Small water cycles: e.g. cooling water, water leakage
- Dosing e.g. in chemical industry

Design

The SITRANS FM100 is designed to measure small- and medium sized flow of conductive liquids. The small build in length of 108 mm allows to fit the device in almost any space. The robust stainless-steel housing protects the device in changing surroundings.

The measurement is displayed on the local screen as well as accessible via 2 freely configurable outputs (pulse-/frequency-/alarm- and analogue).

Mode of operation

The flow measuring principle is based on Faraday's law of electromagnetic induction according to which the sensor converts the flow into an electrical voltage proportional to the velocity of the flow.

Integration

Pressure loss

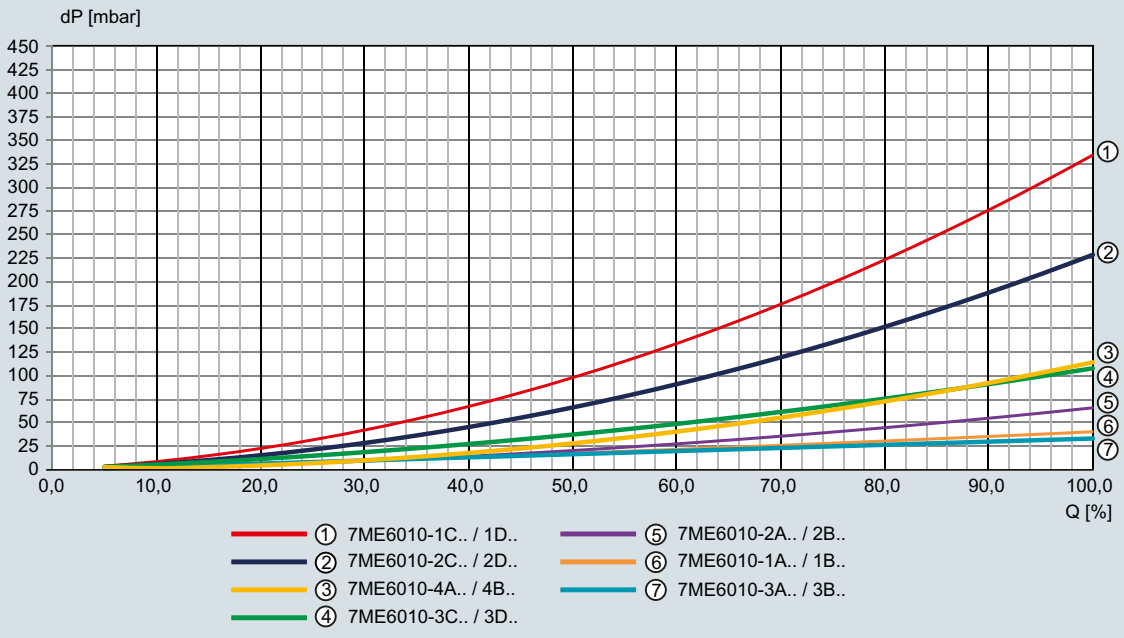

© Siemens 2021

Technical specifications

Product characteristic	FM100
Measuring principle	Electromagnetic induction
Media	Conductive liquid with ≥ 20 µS/cm
Accuracy	< ±(0.8 % of reading + 0.5 % of full scale)[1]
Repeatability	±0.2 % of full scale
Response time flow t_{90}	
• Alarm/pulse/frequency output	< 100 ms
• Current output	< 1 s
Temperature measurement	
Sensor	PT1000
Accuracy	≤ ±2 °C (flow > 0.2 m/s)
Measuring range	Temperature range of media
Response time temperature t_{90} (signal output)	< 20 s
Process connection	
Nominal size	G ½" … G 2"
	Compatible NPT adapter available (¼" … 2")
Process connection	Threaded fitting
Rated operation conditions	
Mounting position	In all directions, bidirectional measuring
In-/outlet	3 × diameter / 2 × diameter
Ambient temperature	
• Standard compact sensor	-20 … +70 °C (-4 … +158 °F)
• Remote version with ETFE-Cable	-20 … +140 °C (-4 … +284 °F)
• Remote version with PVC-Cable	-20 … +85 °C (-4 … +185 °F)
Enclosure rating	IP67
Operating pressure	Max. 16 bar
Pressure drop	See pressure loss diagram
Mechanical load	
• Shock resistance	DIN EN 60068-2-27:2010: 20 g (11 ms)
• Vibration resistance	DIN EN 60068-2-6:2008: 5 g (10 … 2 000 Hz)
• Environmental testing	DIN EN 60068-2-30:2006: severity level b
EMC	2014/30/EU
Design	
Weight	See dimensional drawings
Housing material	Stainless steel 1.4404
Electrode material	Stainless steel 1.4404
Connection fitting	Stainless steel 1.4404
Insulation parts	PEEK
Seals	FKM (Option: EPDM)
Display	PMMA
	Operation via 4 optical touch sensors (operation with hand gloves)
	TFT display, 128 × 128 pixels, 1.4" display, orientation in 90° steps adjustable, repetition rate adjustable 0.5 … 10 s
Cable entries	M12x1 4-pin connection
Dimensions	See dimensional drawings

Electrical data	
Power supply	19 … 30 V DC
Power consumption	Max. 200 mA
Outputs	
• Frequency	Push-Pull, freely scalable, 2kHz @ overflow
	f_{min} @ FS = 50 Hz
	f_{max} @ FS = 1 000 Hz
• Pulse	Push-Pull, freely scalable, configurable for partial and accumulated totalizer
• Alarm	NPN, PNP, Push-Pull, configurable max. 30 V DC, max. 200 mA short-circuit proof
• Current	0(4) … 20 mA (active) or 0(2) … 10 V DC
	Max. load 500 Ω
Input	
• Control	Active signal U_{high} max. 30 V DC
	0 < Low < 10 V DC
	15 V DC < High < Vs
Dosing function	Dosing output OUT2:
	Push-Pull, High active
	Control input OUT1:
	START/STOP 0.5 s < t_{high} < 4 s
	RESET t_{high} > 5 s
Communication	**IO-Link**
• Manufacturer ID	42 (decimal), 0x002A (hex)
• Manufacturer name	Siemens AG
• Version	V1.1
• Bitrate	COM3
• Minimal cycle time	1.1 ms
• SIO-Mode	Yes (OUT1 in configuration IO-Link)
• Block parameterization	Yes
• Operational readiness	10 s
• Max. cable length	20 m

[1] Under reference conditions:
- Media temperature: 15 … 30 °C
- Ambient temperature: 15 … 30 °C
- 1 cST
- 500 µS/cm
- 1 bar

© Siemens 2021

SITRANS FM100

Selection and ordering data

	Article No.							
SITRANS FM100 flowmeter ↗	**7ME6010-**	■	■	■	■	■		**0**
↗ Click on the Article No. for the online configuration in the PIA Life Cycle Portal.								
Process connection, measuring range								
Male thread G1/2", 0.03 … 3 l/min					**1**	**A**		
Male thread G1/2", 0.25 … 48 gal/h					**1**	**B**		
Male thread G1/2", 0.04 … 10 l/min					**1**	**C**		
Male thread G1/2", 0.011 … 2,6 gal/min					**1**	**D**		
Male thread G3/4", 0.1 … 25 l/min					**2**	**A**		
Male thread G3/4", 0.025 … 6,6 gal/min					**2**	**B**		
Male thread G3/4", 0.2 … 50 l/min					**2**	**C**		
Male thread G3/4", 0.053 … 13 gal/min					**2**	**D**		
Male thread G1", 0.2 … 50 l/min					**3**	**A**		
Male thread G1", 0.053 … 13 gal/min					**3**	**B**		
Male thread G1", 0.4 … 100 l/min					**3**	**C**		
Male thread G1", 0.1 … 26 gal/min					**3**	**D**		
Male thread G2", 1.5 … 350 l/min					**4**	**A**		
Female thread 2" NPT, 0.4 … 92 gal/min					**4**	**B**		
Transmitter design								
Compact design without cable							**A**	
Gasket material								
FKM/FPM								**0**
EPDM								**1**

© Siemens 2021

Dimensional drawings

SITRANS FM100 flowmeter with compact transmitter

Process connection G1/2", G3/4" and G1

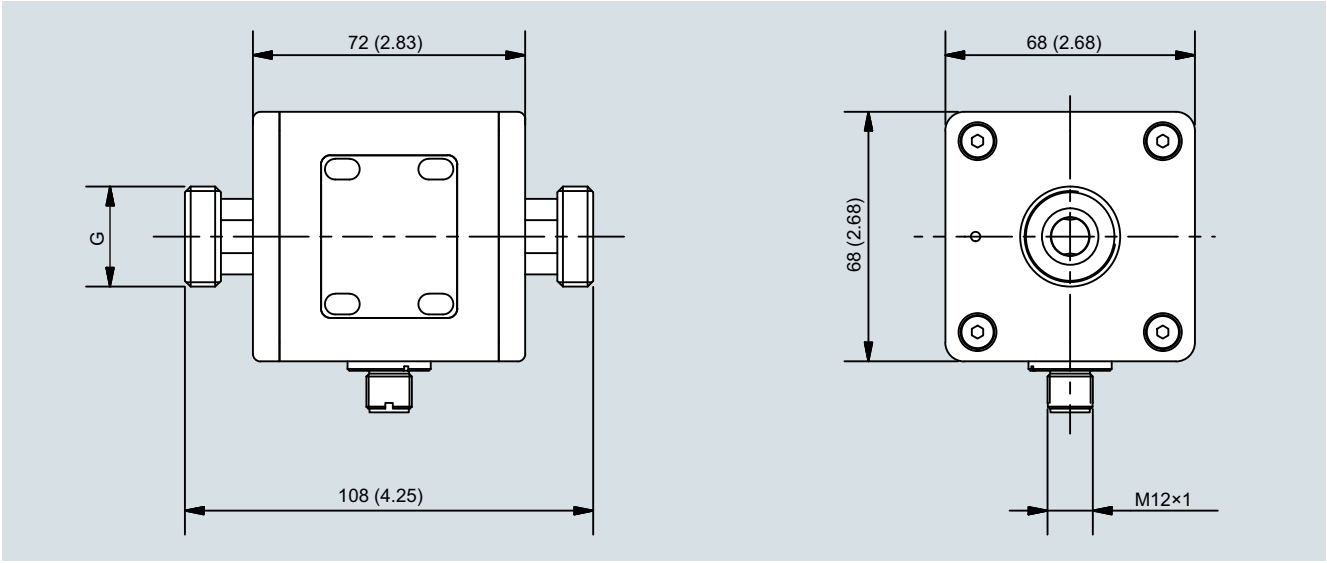

SITRANS FM100 with compact transmitter, process connection G1/2", G3/4" and G1"; dimensions in mm (inch)

Process connection	Nominal size	Weight (g)
Male thread	G1/2"	998
Male thread	G3/4"	988
Male thread	G1"	1010

Process connection G2"

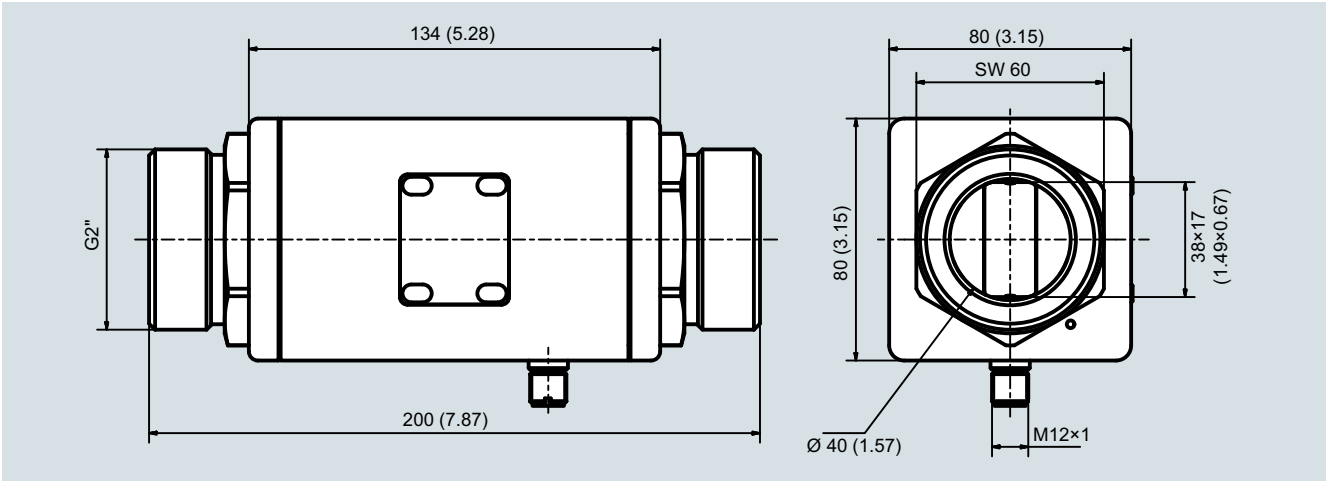

SITRANS FM100 with compact transmitter, process connection G2"; dimensions in mm (inch)

Process connection	Nominal size	Weight (g)
Male thread	G2"	2420

© Siemens 2021

Dimensional drawings (continued)

Process connection 2" NPT IG

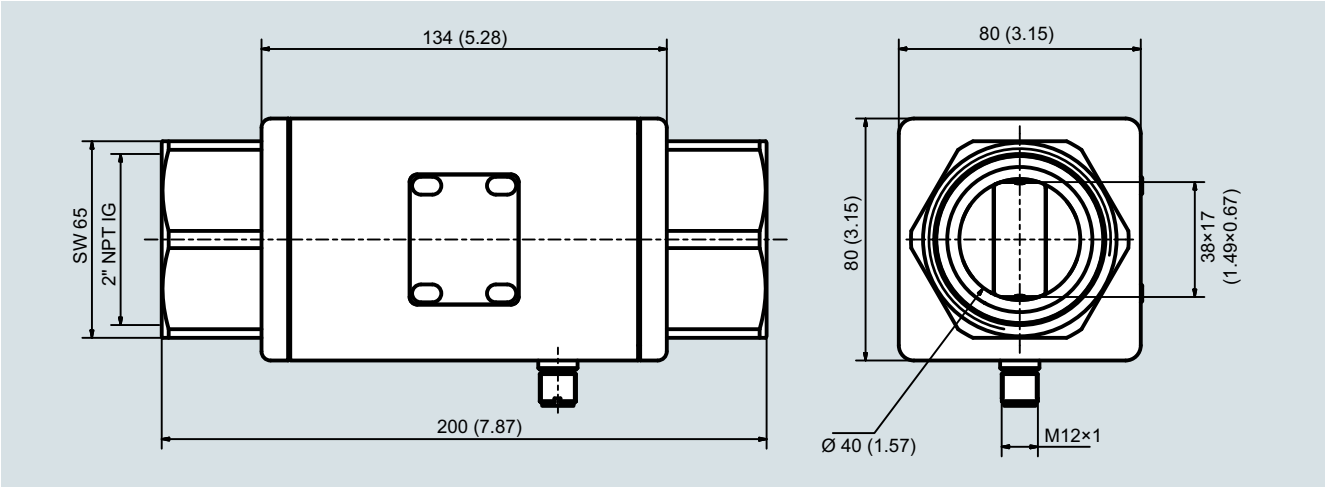

SITRANS FM100 with compact transmitter, process connection 2" NPT (female); dimensions in mm (inch)

Process connection	Nominal size	Weight (g)
Female thread	2" NPT IG	2140

SITRANS FM100 inner diameters

Connection, nominal size	Inside diameters (DN)	Range
G1/2"	5 mm	0.03 ... 3 l/min / 0.04 ... 10 l/min
G3/4"	10 mm	0.1 ... 25 l/min / 0.2 ... 50 l/min
G1"	15 mm	0.2 ... 50 l/min / 0.4 ... 100 l/min
2" NPT IG	see dimensional drawings	1.5 ... 350 l/min

© Siemens 2021

Overview



SITRANS FM TRANSMAG 2 with the SITRANS FM MAG 911/E sensor is a pulsed alternating field magnetic flowmeter where the magnetic field strength is much higher than conventional DC pulsed magnetic flowmeters.

Benefits

- Wide range of sizes DN 15 to DN 1000 (½" to 40")
- Broad range of liner and electrode materials for extreme process medias
- Fully welded construction provides a ruggedness that suits the toughest applications and environments.
- Automatic reading of SmartPLUG for easy commissioning
- Simple menu operation with two-line display
- Comprehensiv self-diagnostic with selfmonitoring and internal simulation

Application

The main applications of the SITRANS FM transmitter TRANSMAG 2 can be found in the following sectors:

- Pulp and Paper industry
- Mining industry

The patented pulse alternating field technology is ideal for difficult applications like:

- High concentrated paper stock > 3 %
- Heavy mining slurries up to 70 % solid concentration
- Mining slurries with magnetic particles.
- Low conductive medias ≥1 µS/cm (0.1 µS/cm depending on medium)

Design

- Available for remote mounting
- PROFIBUS PA (profile 2.0) / HART communication
- Analog output and digital outputs for pulses, device status, limits, flow direction, frequency output110

Mode of operation

The flow measuring principle is based on Faraday's law of electromagnetic induction according to which the sensor converts the flow into an electrical voltage proportional to the velocity of the flow.

© Siemens 2021

Transmitter TRANSMAG 2 with sensor MAG 911/E

Function

The TRANSMAG 2 is a microprocessor-based transmitter with a built-in alphanumeric display in several languages. The transmitters evaluate the signals from the associated electromagnetic sensors and also fulfill the task of a power supply unit which provides the magnet coils with a constant current.

The magnetic flux density in the sensor is additionally monitored by reference coils.

Further information on connection, mode of operation and installation can be found in the data sheets for the sensors.

Displays and keypads

Operation of the transmitter can be carried out using:

- Keypad and display unit
- HART communicator
- PC/laptop and SIMATIC PDM software via HART communication
- PC/laptop and SIMATIC PDM software using PROFIBUS PA communication

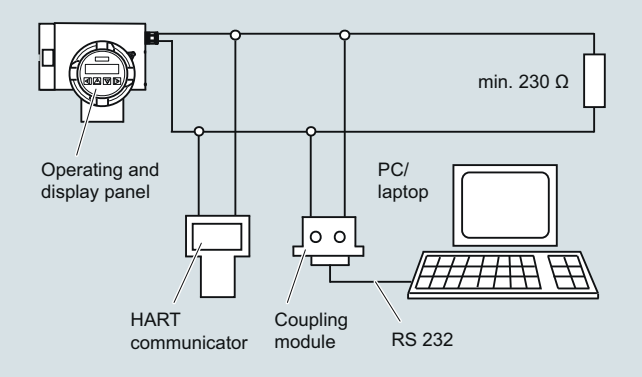

HART communication

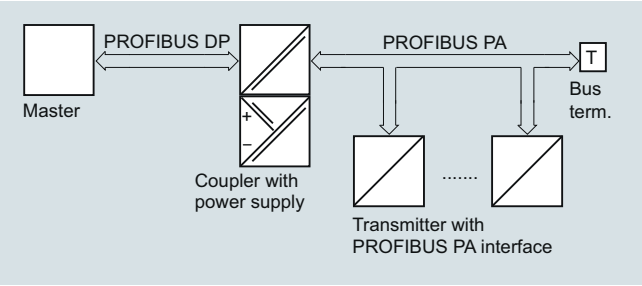

PROFIBUS PA communication

© Siemens 2021

Technical specifications

Transmitter TRANSMAG 2	
Mode of operation and design	
Measuring principle	Electromagnetic with pulsed alternating field (PAC)
Magnetic field excitation	Automatic power supply synchronization
• 50 Hz AC power supply	Bipolar (16.7 Hz) Bipolar with prepulse (10 Hz) Unipolar (8.33 Hz)
• 60 Hz AC power supply	Bipolar (20 Hz) Bipolar with prepulse (12 Hz) Unipolar (10 Hz)
Accuracy under reference conditions	
Measuring tolerance of pulse output	
• With v > 0.25 m/s (0.82 ft/s)	≤ ± 0.5 % of measured value ± 1.2 mm/s (0.05 inch/s)
• With v < 0.25 m/s (0.82 ft/s)	± 2.5 mm/s (0.1 inch/s)
Measuring tolerance of analog output	As pulse output plus ± 0.1 % conversion error ± 20 µA
Repeatability	0.2 % of measured value
Reference conditions	
• Process temperature	25 °C ± 5 °C (77 °F ± 9 °F)
• Ambient temperature	25 °C ± 5 °C (77 °F ± 9 °F)
• Warm-up time	Min. 30 min
• Installation conditions	Inlet pipe section ≥ 10 × DN Outlet pipe section ≥ 5 × DN Installed centered in pipe
• Medium	Water without gaseous or solid components
Calibration	
Default calibration, calibration report shipped with sensor	2 × 20 %, 2 × 50 % and 2 × 100 %
Outputs	
Electrical isolation	Outputs electrically isolated from one another and from the power supply, max. 60 V permissible against PE/equipotential bonding
Current output	0/4 … 20 mA (7ME5034-0…. or 7ME5034-2….)
• Signal	
- Upper limit	0/4 … 20 mA, selectable
- Failure	20 … 22.5 mA, optional 3.6; 20 or 24 mA
• Load	
- Output	max. 600 Ω, max. load voltage 15 V DC
- For HART communication	≥ 250 Ω
Communication	Via analog output with PC coupling module or HART communicator
• Protocol	HART, version 5.1
Digital output	
Signal	
• Output	Configurable as active or passive signals
- Active signal	24 V DC, ≤ 24 mA, R_i = 170 Ω
- Passive signal	Open collector, max. 30 V DC, 200 mA
Output configuration	
• Pulse	
- Pulse significance	≤ 5000 pulses/s
- Pulse width	≥ 0.1 ms
• Limit frequency	≤ 10000 Hz
• Limits	Limits for flow and quantity, flow direction, alarm
Digital output 2 (relay)	
(only 7ME5034-0…)	
Relay	NC or NO function
• Rating	Max. 5 W, max. 50 V AC/DC, max. 200 mA
• Output configuration	Limits for flow and quantity, flow direction, alarm

Transmitter TRANSMAG 2	
Digital input (optional to digital output 2)	Non-intrinsically-safe
(only 7ME5034-2…)	
• Input function configurable as high-active or low-active	Set measured value to zero or reset totalizer
• Signal voltage	Max. 30 V DC, R_i = 3 kΩ: High level: +11 … +30 V DC Low level: -30 … +5 V DC
For PROFIBUS devices	
PROFIBUS PA (for PROFIBUS-devices 7ME5034-1…)	
• Communication	Layer 1 and 2 according to PROFIBUS PA Transmission according to IEC 1158-2 Layer 7 (protocol layer) according to PROFIBUS PA and DP V1 (EN 50170) Device Class B, device profile 2.0 Max. 4 simultaneous C2 connections
• Bus voltage	9 … 32 V DC permissible
• Current consumption from bus	10 mA; limited to ≤ 15 mA in event of fault by electrical current limitation
Rated operating conditions	
Ambient temperature	
• Operation	-20 … +60 °C (-4 … +140 °F)
• Storage	-25 … +80 °C (-13 … +176 °F)
Degree of protection	IP67/NEMA 4X
Electromagnetic compatibility (EMC)	
• Emitted interference	To IEC/EN 61326 for use in industrial areas
• Noise immunity	To IEC/EN 61326 for use in industrial areas
Design	
Weight of transmitter	4.4 kg (9.7 lb)
Remote version	Transmitter must be connected to sensor using shielded cable
Maximum cable length	100 m (328 ft)
Housing	Die-cast aluminum, painted
Cables entries	Remote installations
• Power supply and outputs	2 x M20 (HART)/M25 (PROFIBUS) or 2 x ½" NPT (HART)
• Sensor connections	2 x M16 (HART) or 2 x ½" NPT
Displays and keypad	
General display	LCD, backlid, two lines with 16 characters each
Multi-display for	Flow, totalizer, flow velocity
Keypad	4 keys for entering parameters
Power supply	
corresponding to rating plate	
• AC supply	100 … 250 V AC ± 15 %, 47 … 63 Hz
• Power consumption	Approx. 120 … 630 VA, depending on sensor
Line fuse	100 … 230 V AC: T1.6A
Magnet current fuse	F5A/250 V

© Siemens 2021

Technical specifications (continued)

Sensor cables between sensor and transmitter

Sufficient shielding must be provided, as well as fixed routing of the signal cables (electrode and coil cable).

Signal cables must be routed free of vibration, and protected against strong magnetic and stray fields. In case of doubt, the sensor cables must be routed in grounded steel conduit. The cable length between the sensor and transmitter must not exceed 100 m (328 ft).

MAG 911/E sensor	
Process connection	
Flanges	
• EN 1092-1, raised face (EN 1092-1, DIN 2501 and BS 4504 have the same mating dimensions)	• DN 200 ... 1000 (8“ … 40“): PN 10 (145 psi) • DN 65 ... 1000 (2½“ … 40“): PN 16 (232 psi) • DN 200 ... 1000 (8“ … 40“): PN 25 (362 psi) • DN 15 ... 1000 (½“ … 40“): PN 40 (580 psi)
• ANSI B16.5 (BS 1560), raised face	• ½” ... 40”: Class 150 (20 bar (290 psi)) • ½” ... 24”: Class 300 (50 bar (725 psi))
• AWWA C-207, raised face	28” ... 40”: Class D (10 bar)
• JIS B 2220:2004	½” ... 24”: K10
Media conductivity	Minimum conductivity ≥ 1 µS/cm
Rated operating conditions	
Enclosure rating	IP67/NEMA 4X Optional IP68/NEMA 6
Temperature of medium	
• Soft rubber	0 … +70 °C (32 … 158 °F)
• Hard rubber	0 … +90 °C (32 … 194 °F) Option: 100°C (212°F)
• PTFE	-20 … +150 °C (-4 … +302 °F) at 25 bar (363 psi) -20 … +100 °C (-4 … +212 °F) at 40 bar (580 psi)
• Linatex	-40 … +70 °C (-40 … +158 °F) (for temperatures below -20 °C (-4 °F) AISI 316L/1.4404 flanges must be used)
• Novolac	130 °C (266 °F) at 40 bar (580 psi)
Design	
Weight	See dimensional drawings
Flange and housing material	Carbon steel ASTM A 105, with corrosion resistant coating Corrosivity category C3 acc. to ISO 12944-2, or AISI 316L/1.4404 flanges and carbon steel housing ASTM A105, with corrosion resistant coating Corrosivity category C3 according to ISO 12944-2
Measuring pipe material	Stainless steel AISI 304 or higher
Electrode material	• AISI 316/1.4571 • Hastelloy C276/2.4819 • Platinum • Titanium • Tantalum
Grounding electrode material	Defined via the order code
Terminal box (remote version only)	• Standard: Fibre glass reinforced polyamide • Option: Stainless steel AISI 316/1.4436
Cable entries	• 2 x M20 or 2 x ½" NPT

Protection ring		
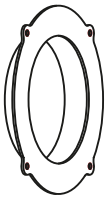	Function	To protect the edges of liners from abrasion (e.g. gravel, sand etc.). Used mainly with soft rubber liners and for PTFE liners at high temperatures from 100 to 150 °C (212 to 302 °F).
	Contact with medium	Yes, please always check resistance to measured medium.
	Material	Stainless steel AISI 316/1.4571, optionally Hastelloy C276/2.4819
	Material thickness	The overall length of the sensor is increased by 6 mm for DN 15 to DN 150 (0.24" for ½" to 6") or 10 mm for DN 200 to DN 600 (0.4" for 8" to 24")
	Standard	Optional for all liners. Must be ordered separately.
	Order No.	**7ME5942-...**

Grounding ring		
	Function	Electrical reference and grounding of the medium. Required if the pipelines are not electrically conducting or are lined (plastic pipelines, concrete pipelines etc.). All grounding rings must be connected to the grounding screw present on the sensor.
	Contact with medium	Yes, please always check resistance to measured medium.
	Material	Stainless steel AISI 316/1.4571 or Hastelloy C4/2.4610
	Material thickness	The overall length of the sensor is increased by 2 mm (0.08") per grounding ring.
	Standard	Optional for all liners. Required between the medium and sensor for equipotential bonding between non-conducting pipelines or lined pipelines.
	Order No.	**7ME5943-...**

Important:

The rings must be ordered together with the sensor. Gaskets are not included. In case of replacement please include the sensor MLFB code on the order.

© Siemens 2021

Technical specifications (continued)

Classification according to pressure equipment directive (PED 2014/68/EU)					
Nominal size		**Nominal pressure**		**Permissible media**	**Category**
DN	**(inches)**	**PN**	**(MWP psi)**		
15 … 25	(½" … 1")	40	580	Gases fluid group 1 and liquids fluid group 1	Article 4.3
200 … 300	(8" … 12")	10	(145)	Gases fluid group 1 and liquids fluid group 1	II
65 … 250	(2½" … 10")	16	(232)	Gases fluid group 1 and liquids fluid group 1	II
40 ... 100	(1½" … 4")	40	(580)	Gases fluid group 1 and liquids fluid group 1	II
350 … 1000	(14" … 40")	10	(145)	Gases fluid group 1 and liquids fluid group 1	III
300 … 1000	(12" … 40")	16	(232)	Gases fluid group 1 and liquids fluid group 1	III
200 … 600	(8" … 24")	25	(363)	Gases fluid group 1 and liquids fluid group 1	III
125 … 600	(5" … 24")	40	(580)	Gases fluid group 1 and liquids fluid group 1	III

Notes on pressure equipment directive

The devices are designed for liquids of danger group "Gases of fluid group 1". The categories differ according to the version, and are listed in the table below.

© Siemens 2021

Transmitter TRANSMAG 2 with sensor MAG 911/E

Selection and ordering data

	Article No.
Transmitter TRANSMAG 2 ↗	**7ME5034-**
Remote with standard wall mounting bracket, local display, die cast aluminum	■ A A 1 1 - ■ A A 0
↗ Click on the Article No. for the online configuration in the PIA Life Cycle Portal.	
Output/communication	
4 ... 20 mA with HART	**0**
PROFIBUS PA	**1**
4 ... 20 mA with HART and digital input	**2**
Cable glands	
M20 x 1.5	**1**
½" NPT	**2**

Additional information	Order code
Please add "**-Z**" to Article No. and specify Order code(s) and plain text.	
Special mounting bracket for wall and pipeline installation	**A02**
Transmitter setting for parameter "TAG number" (specify in plain text, max. 8 characters)	**Y15**
Transmitter setting for parameter "TAG descriptor" (specify in plain text, max. 16 characters)	**Y16**
Tag name plate, stainless steel (specify in plain text)	**Y17**
Special version (specify in plain text)	**Y99**

	Article No.
Sensor MAG 911/E ↗	**7ME5610-**
	■ ■ ■ ■ ■ - ■ A A ■
↗ Click on the Article No. for the online configuration in the PIA Life Cycle Portal.	
Nominal size	
DN 15 (½")	**1 V**
DN 25 (1")	**2 D**
DN 40 (1½")	**2 R**
DN 50 (2")	**2 Y**
DN 65 (2½")	**3 F**
DN 80 (3")	**3 M**
DN 100 (4")	**3 T**
DN 125 (5")	**4 B**
DN 150 (6")	**4 H**
DN 200 (8")	**4 P**
DN 250 (10")	**4 V**
DN 300 (12")	**5 D**
DN 350 (14")	**5 K**
DN 400 (16")	**5 R**
DN 450 (18")	**5 Y**
DN 500 (20")	**6 F**
DN 600 (24")	**6 P**
DN 700 (28")	**6 Y**
DN 800 (32")	**7 H**
DN 900 (36")	**7 M**
DN 1000 (40")	**7 R**
Flange norm and pressure rating	
EN 1092-1, PN 10 (DN 200 ... 1000 (8" ... 40"))	**B**
EN 1092-1, PN 16 (DN 65 ... 1000 (2½" ... 40"))	**C**
EN 1092-1, PN 25 (DN 200 ... 1000 (8" ... 40"))	**E**
EN 1092-1, PN 40 (DN 15 ... 1000 (½" ... 40"))	**F**
ANSI B16.5, Class 150 (½" ... 24")[1]	**J**
ANSI B16.5, Class 300 (½" ... 24")[2]	**K**
AWWA C-207 Class D (28" ... 40")	**L**
JIS 10 K (½" ... 24")	**R**

	Article No.
Sensor MAG 911/E	**7ME5610-**
	■ ■ ■ ■ ■ - ■ A A ■
Flange material	
Mid steel flanges 1.0460/1.0570	**1**
Stainless steel flanges, AISI 316L/1.4404	**3**
Liner material	
Soft rubber (DN 25 to DN 1000)	**1**
PTFE (DN 15 to DN 600)	**3**
Hardrubber (DN 15 to DN 1000)	**4**
Linatex (DN 25 to DN 1000)	**5**
Novolak (sealing material FFKM) (DN 50 to DN 1000)	**6**
Electrode material	
AISI 316Ti/1.4571	**1**
Hastelloy C276/2.4819	**2**
Platinum	**3**
Titanium	**4**
Tantalum	**5**
Cable glands/terminal box	
Metric: Polyamide terminal box	**1**
½" NPT: Polyamide terminal box	**2**
Metric: Stainless steel terminal box	**3**
½" NPT: Stainless steel terminal box	**4**

[1] 20 °C (68 °F), max. 19.6 bar (285 psi) for steel flanges and max. 15.9 bar (231 psi) for stainless seel flanges

[2] 20 °C (68 °F), max. 51.1 bar (741 psi) for steel flanges and max. 41.4 bar (600 psi) for stainless seel flanges

Additional information	Order Code
Please add "**-Z**" to Article No. and specify Order code(s) and plain text.	
Two grounding electrodes made of stainless steel AISI 316Ti/1.4571	**A02**
Two grounding electrodes made of Hastelloy C276/2.4819	**A04**
Two grounding electrodes made of Platinum	**A05**
Two grounding electrodes made of Titanum	**A06**
Two grounding electrodes made of Tantalum	**A07**
Factory certificate to EN 10204-2.2	**C14**
Material certificate according to EN 10204-3.1	**C16**
Power supply 110 V/60 Hz	**P01**
Flow range setting: Specify upper flow range value	**Y01**
Pulse output setting: Specify pulse value (1 puse/unit)	**Y02**
Silicon-free version	**Y04**
Tag name plate, stainless steel (specify in plain text)	**Y17**
Special version (specify in plain text)	**Y99**

© Siemens 2021

Selection and ordering data

	Article No.												
Cable kit for sensor MAG 911/E ↗	**7ME5930-**												Ord. code
	5	■	**A**	**0**	**0**	**-**	**0**	**A**	**A**	**0**	■	■	■
↗ Click on the Article No. for the online configuration in the PIA Life Cycle Portal.													
Cable													
Cable kit for sensor MAG 911/E, coil cable 3 × 1.0 mm² (3 × 0.0016 inch²), electrode cable 7 × 0.5 mm² (7 × 0.0008 inch²), single shielded with PVC jacket													
• Length: 5 m (16.4 ft)		**B**											
• Length: 10 m (32.8 ft)		**C**											
• Length: 20 m (65.6 ft)		**D**											
• Length: 30 m (98.4 ft)		**E**											
• Length: 40 m (131 ft)		**F**											
• Length: 50 m (164 ft)		**G**											
• Length: 60 m (197 ft)		**H**											
• Length: 80 m (260 ft)		**J**											
• Length: 100 m (328 ft)		**K**											
• Other length (specify in plain text) Please add "**-Z**" to Article No. and specify Order code(s) and plain text.		**Z**									**J**	**1**	**Y**

	Article No.												
Grounding and protection ring for sensor MAG 911/E													
Protection ring (2 pcs.) ↗	**7ME5942-**	■	■	■	■	■							
Grounding ring (1 pc.) ↗	**7ME5943-**	■	■	■	■	■							
↗ Click on the Article No. for the online configuration in the PIA Life Cycle Portal.													
Nominal size													
DN 15 (½")							**1**	**V**					
DN 25 (1")							**2**	**D**					
DN 40 (1½")							**2**	**R**					
DN 50 (2")							**2**	**Y**					
DN 65 (2½")							**3**	**F**					
DN 80 (3")							**3**	**M**					
DN 100 (4")							**3**	**T**					
DN 125 (5")							**4**	**B**					
DN 150 (6")							**4**	**H**					
DN 200 (8")							**4**	**P**					
DN 250 (10")							**4**	**V**					
DN 300 (12")							**5**	**D**					
DN 350 (14")							**5**	**K**					
DN 400 (16")							**5**	**R**					
DN 450 (18")							**5**	**Y**					
DN 500 (20")							**6**	**F**					
DN 600 (24")							**6**	**P**					
DN 700 (28")							**6**	**Y**					
DN 800 (32")							**7**	**H**					
DN 900 (36")							**7**	**M**					
DN 1000 (40")							**7**	**R**					
Flange design													
EN 1092-1, PN10									**B**				
EN 1092-1, PN16									**C**				
EN 1092-1, PN25									**E**				
EN 1092-1, PN40									**F**				
AISI B16.5, class 150									**J**				
AISI B16.5, class 300									**K**				
AWWA C-207, class D									**L**				
JIS B2220, 10K									**R**				
Material													
Stainless steel AISI 316/1.4571										**1**			
Hastelloy C4/2.4610										**2**			
Liner													
Soft rubber											**1**		
PTFE											**3**		
Hard rubber											**4**		
Linatex											**5**		
Novolak											**6**		

3

© Siemens 2021

Transmitter TRANSMAG 2 with sensor MAG 911/E

Selection and ordering data (continued)

Operating instructions for SITRANS FM TRANSMAG 2

Description	Article No.
• English	**A5E00102775**
• German	**A5E00102774**

All literature is available to download for free, in a range of languages, at
http://www.siemens.com/processinstrumentation/documentation

Accessories

Description	Article No.	
Standard wall-mounting bracket, stainless steel AISI 316L/1.4404	**7ME5933-0AC04**	
Special wall-mounting bracket, BI 2.5 DIN 59382 X6Cr17	**7ME5933-0AC05**	
Potting kit for IP68/ NEMA 6P sealing of sensor junction box	**FDK:085U0220**	

Spare parts

Description	Article No.	
Display unit	**7ME5933-0AC00**	
Display lid (Ex) in die-cast aluminum, with corrosion resistant coating (min. 60 mm)	**7ME5933-0AC01**	
Blind lid for sensor cables connection compartment (only remote version) in die-cast aluminum, with corrosion resistant coating (min. 60 mm) incl. O-ring seal	**7ME5933-0AC02**	
Blind lid (mains supply, input/outputs) in die-cast aluminum, with corrosion resistant coating (min. 60 mm)	**7ME5933-0AC03**	
Safety clamp for electronic cover with glass plate (7ME5933-0AC01)	**7ME5933-0AC06**	
M20 cable gland set for power and output connection, gray PA plastic, 2 pcs. • cables Ø 6 ... 12 mm (0.24" ... 0.47") • -40 ... +100 °C (-40 ... +212 °F)	**A5E02246350**	
1/2" NPT cable gland set for power and output connection, gray PA plastic, 2 pcs. • cables Ø 6 ... 12 mm (0.24" ... 0.47") • -40 ... +100 °C (-40 ... +212 °F)	**A5E02246396**	
M16 x 1.5 cable gland set for sensor connection, brass chrome, 2 pcs. and 2 pcs. blind • cables Ø 5 ... 9 mm (0.20" ... 0.35") • -20 ... +105°C (-4 ... +221 °F)	**A5E02246369**	

© Siemens 2021

Dimensional drawings

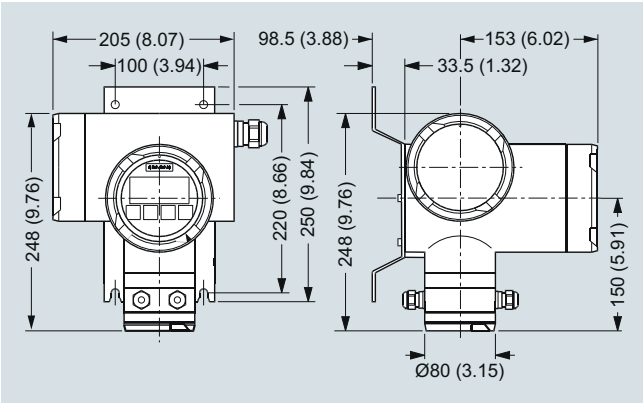

SITRANS FM transmitter TRANSMAG 2 with wall-mounting bracket, dimensions in mm (inch)

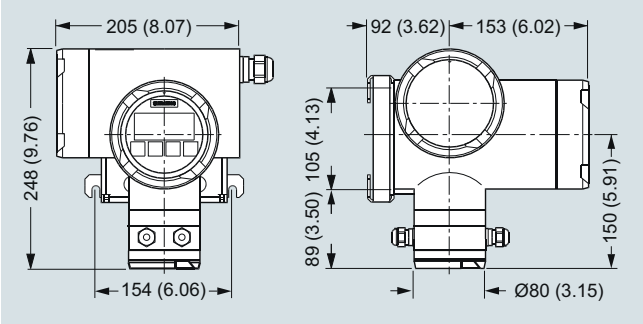

SITRANS FM transmitter TRANSMAG 2 with special wall-mounting bracket, dimensions in mm (inch)

© Siemens 2021

3

Dimensional drawings (continued)

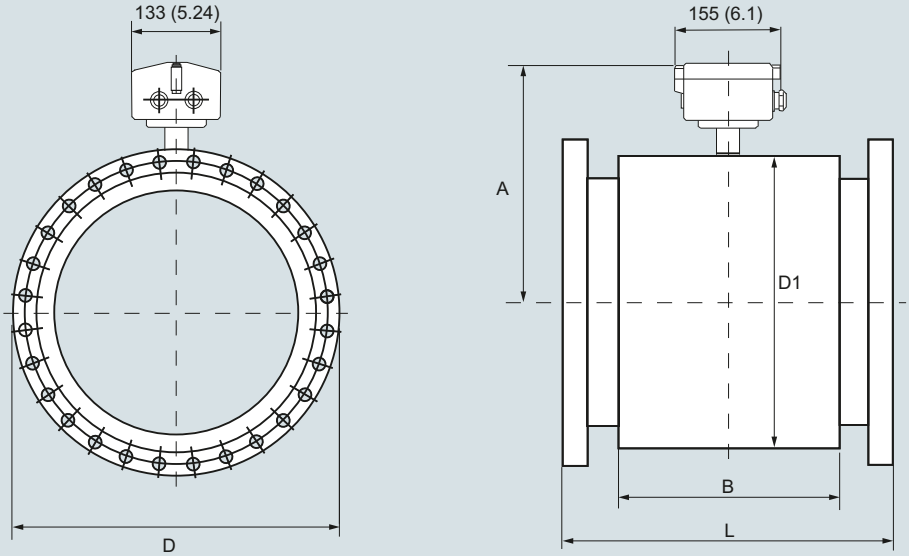

SITRANS FM flow sensor MAG 911/E, compact version, dimensions in mm (inch)

Built-in length MAG 911/E [in mm and inch]

Nominal size	**DN 15**	**DN 25**	**DN 40**	**DN 50**	**DN 65**	**DN 80**	**DN 100**	**DN 125**	**DN 150**	**DN 200**	**DN 250**
	½"	**1"**	**1½"**	**2"**	**2½"**	**3"**	**4"**	**5"**	**6"**	**8"**	**10"**
Built-in length L[1)]											
Hard rubber version Linatex/soft rubber version	270 (10.63)	270 (10.63)	280 (11.02)	280 (11.02)	330 (12.99)	340 (13.39)	340 (13.39)	370 (14.57)	370 (14.57)	410 (16.14)	470 (18.50)
PTFE-liner without protection rings	270 (10.63)	270 (10.63)	280 (11.02)	280 (11.02)	330 (12.99)	340 (13.39)	340 (13.39)	370 (14.57)	370 (14.57)	410 (16.14)	470 (18.50)
Novolak-version	-	-	275 (10.83)	275 (10.83)	325 (12.79)	335 (13.19)	333 (13.11)	362 (14.25)	362 (14.25)	401 (15.79)	460 (18.11)
Dimensions of sensor housing											
Housing width B	170 (6.69)	170 (6.69)	170 (6.69)	170 (6.69)	170 (6.69)	170 (6.69)	170 (6.69)	170 (6.69)	170 (6.69)	240 (9.45)	240 (9.45)
Height A	206 (8.11)	206 (8.11)	222 (8.74)	229 (9.02)	262 (10.32)	262 (10.32)	274 (10.79)	286 (11.26)	299 (11.78)	334 (13.15)	358 (14.10)
Housing diameter D_1	135 (5.35)	135 (5.35)	167 (6.58)	182 (7.17	247 (9.73)	247 (9.73)	272 (10.71)	296 (11.65)	322 (12.68)	392 (15.43)	440 (17.32)
Weight of PN 16 version in kg (MWP 232 psi version in lb) approx.	8.0 (17.64)	8.5 (18.74)	11.5 (25.35)	25.0 (55.12)	26 (57.32)	27 (59.53)	28 (61.73)	34 (74.95)	38 (83.78)	68 (149.9)	81 (178.6)

Nominal size	**DN 300**	**DN 350**	**DN 400**	**DN 450**	**DN 500**	**DN 600**	**DN 700**	**DN 750**	**DN 800**	**DN 900**	**DN 1000**
	12"	**14"**	**16"**	**18"**	**20"**	**24"**	**28"**	**30"**	**32"**	**36"**	**40"**
Built-in length L[1)]											
Hard rubber version Linatex/soft rubber version	500 (19.68)	550 (21.65)	600 (23.62)	650 (25.59)	650 (25.59)	780 (30.71)	910 (35.83)	910 (35.83)	1040 (40.95)	1170 (46.06)	1300 (51.18)
PTFE-liner without protection rings	500 (19.68)	550 (21.65)	600 (23.62)	660 (25.98)	650 (25.59)	780 (30.71)	-	-	-	-	-
Novolak-version	489 (19.25)	538 (21.18)	592 (23.31)	638 (25.12)	638 (25.12)	772 (30.39)	903 (35.55)	903 (35.55)	1033 (40.63)	1163 (45.79)	1293 (50.91)
Dimensions of sensor housing											
Housing width B	240 (9.45)	225 (8.86)	250 (9.84)	270 (10.63)	300 (11.81)	360 (14.17)	420 (16.54)	420 (16.54)	500 (19.69)	560 (22.05)	620 (24.41)
Height A	383 (15.08)	375 (14.76)	400 (15.75)	433 (17.05)	453 (17.84)	505 (19.88)	558 (21.97)	590 (23.23)	608 (23.94)	658 (25.91)	713 (28.07)
Housing diameter D_1	490 (19.29)	474 (18.66)	524 (20.63)	591 (23.26)	629 (24.76)	734 (28.90)	839 (33.03)	904 (35.59)	939 (36.97)	1039 (40.91)	1150 (45.28)
Weight of PN 16 version in kg (MWP 232 psi version in lb) approx.	95 (209.4)	118 (260.2)	161 (354.9)	185 (407.9)	233 (513.7)	401 (884.1)	420 (925.9)	450 (992.1)	500 (1102.3)	560 (1234.6)	620 (1366.9)

[1)] Tolerance for built-in lenght: L + 0.0 mm/-4.0 mm (-0.00/-0.157 inches).
With protection rings for > DN 25 +6.0 mm, > DN 200 +10.0 mm (> 1" +0.236 inches, > 8" +0.394 inches)

© Siemens 2021

Overview



MAG 8000 is a comprehensive meter which intelligent information and high performance measurement as well as the easy to install concept take cost of ownership and customer service to a new level for water meter.

Benefits

Easy to install

- Compact or remote solution with factory mounted cable and customer setting from factory
- IP68/NEMA 6P enclosure. Sensor can be buried.
- Flexible power supply - internal or external battery pack or mains power supply with battery back-up possibilities
- Superior measurement
- Down to 0.2 % maximum uncertainty
- OIML R 49 type approval
- FM Fire Service Approval
- Bi-directional measurement

Long lasting performance/Low cost of Ownership

- No moving parts means less wear and tear.
- Up to 6 to 10 years maintenance-free operation in typical revenue application
- Robust construction built for the application

Intelligent information, easy to access

- Embedded self-testing and alarm/fault detection feature
- Internal data logger
- Advanced statistics and diagnostics
- Various Add-on communication modules

Application

The following MAG 8000 versions are available as stand-alone water meters:

- MAG 8000 (7ME6810) for abstraction and distribution network
- MAG 8000 CT (7ME6820) for revenue and bulk metering

Design

MAG 8000 is designed to minimize power consumption.

The product program consists of

- Basic and advanced version
- Sensor sizes from DN 25 to 1200 (1" to 48")
- Compact and remote installation in IP68/NEMA 6P enclosure and factory-mounted cable
- SIMATIC PDM and Flow Tool PC configuration softwares

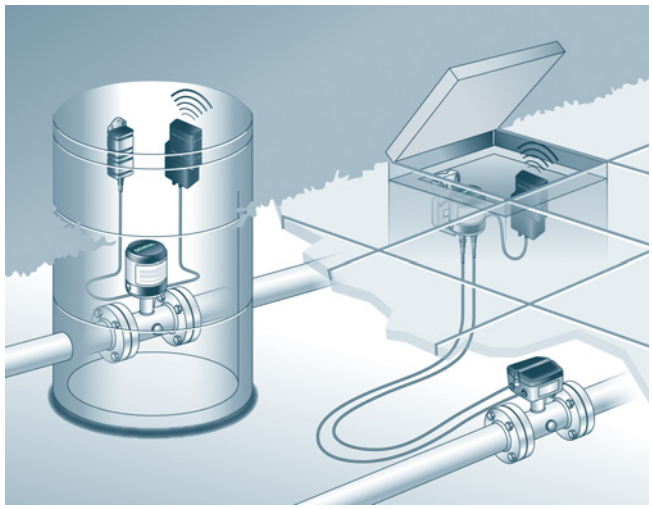

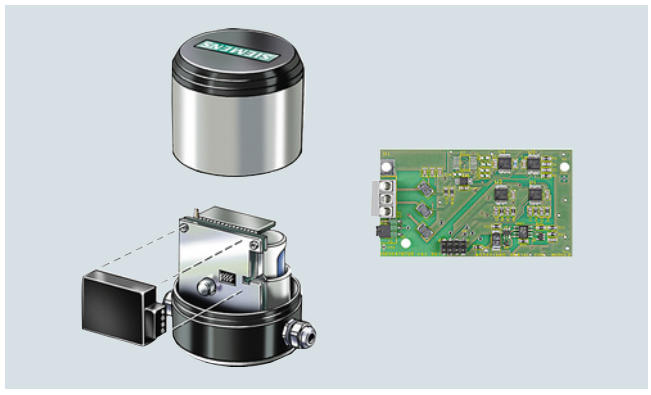

Modbus/Encoder module

3

© Siemens 2021

Battery-operated water meter MAG 8000

Function

MAG 8000 is a microprocessor-based water meter with graphical display and key for optimum customer operation and information on site. The transmitter drives the magnetic field in the sensor, evaluates the flow signal from the sensor and calculates the volume passing through. It delivers the required information via the integrated pulse output or communication interfaces as part of a system solution. Its intelligent functionality, information and diagnostic ensure optimum meter performance and information to optimize water supply and billing.



MAG 8000 can be ordered as a Basic or an Advanced version.

Features/Version	MAG 8000 Basic	MAG 8000 Advanced
Measuring frequency in battery power mode (Manually selected)[1)]	1/15 or 1/30 or 1/60 Hz	from 6.25 to 1/60 Hz depending of sensor size
Output MAG 8000	2 FW/RV/AI/CA	2 FW/RV/AI/CA
Communication	Add-on	Add-on
Data logger	Yes	Yes
Insulation test	Yes	Yes
Leakage detection	No	Yes
Meter utilization	No	Yes
Statistics	No	Yes
Tariff	No	Yes
Settle date (Revenue)	No	Yes

1) Excitation frequency settings with mains power supply, see technical specifications for each version:

Some information is accessible via the display whereas all information is accessible via the IrDA communication interface with the PDM software. Data and parameters are registered in a EEPROM. They can all be read, but changing the information demands a software password or a hardware key attached to the printed circuit board.

The SIMATIC PDM tool gives the possibility of testing and verifying the flowmeter on site and creating a printed "Qualification Certificate" with all specific data that define the quality status of the measurement.

The Qualification Certificate consists of two pages with information about the actual status of the sensor:

Part 1 provides general settings, sensor and battery info, totalizer values and pulse output settings.

Part 2 provides detailed information about electronic and sensor functionality and a main parameter list for evaluating the functionality of the MAG 8000 water meter.



SIMATIC PDM

For more details about SIMATIC PDM please go to chapter 8 "Digitalization and Communication".

© Siemens 2021

Technical specifications

Transmitter	
Installation	Compact (integral)
	Remote with factory-mounted cable 5, 10, 20 or 30 m (16.4, 32.8, 65.6 or 98.4 ft)
Enclosure	Stainless steel top housing (AISI 316) and coated brass bottom.
	Remote wall mount bracket in stainless steel (AISI 304).
Cable entries	2 × M20 (one gland for one cable of size 6 … 8 mm (0.02 … 0.026 ft) is included in the standard delivery)
Display	Display with 8 digits for main information
	Index, menu and status symbols for dedicated information
Resolution	Totalized information can be displayed with 1, 2 or 3 decimals or automatic adjustment (default)
Flow unit	
Europe	Volume in m^3 and flow rate in m^3/h
US	Volume in Gallon and flow rate in GPM
Australia	Volume in Mi and flow rate as Ml/d
Optional display units	Volume: m^3 × 100, l × 100, G × 100, G × 1000, MG, CF × 100, CF × 1000, AF, Al, kl, BBL42
	Flow: m^3/min, m^3/d, l/s, l/min, GPS, GPH, GPD, MGD, CFS, CFM, CFH, BBL42/s, BBL42/min, BBL42/h, BBL42/d
Digital output	2 passive outputs (MOS), individual galvanically isolated
	Maximum load ± 35 V DC, 50 mA short circuit protected
Output A function	Programmable as pulse volume – forward – reverse – forward/net – reverse/net
Output B function	Programmable as pulse volume (like output A), alarm
Output	Max. pulse rate of 50 Hz (pulse B) and 100 Hz (pulse A), pulse width of 5, 10, 50, 100, 500 ms

Transmitter	
Communication	IrDA: Standard integrated infrared communication interface with Modbus RTU protocol
Add-on modules	• RS 232 serial interface with Modbus RTU (Rx/Tx/GND), point to point with max. 15 m cable
	• RS 485 serial interface with Modbus RTU (+/-/GND), multidrop with up to 32 devices with max. 1000 m cable
	• Encoder interface module (for Itron 200WP) "Sensus protocol"
	• 3G/UMTS module with or without analog input cable
Power supply	Auto detection of power source with display symbol for operation power
Internal battery pack	1 D-Cell 3.6 V/16.5 Ah
	2 D-Cell 3.6 V/33 Ah
External battery pack	4 D-Cell 3.6 V/66 Ah
Mains power supply	12 … 24 V AC/DC (10 … 32 V) 2 VA
	115 … 230 V AC (85 … 264 V) 2 VA
	Both mains power supply systems are upgradable for battery backup via internal D-Cell (3.6 V 16.5 Ah) or external battery pack.
Cable	3 m (9.8 ft) for external connection to mains supply (without cable plug)

© Siemens 2021

3

Technical specifications (continued)

Features	
Application identification	Tag number up to 15 characters
Time and date	Device embedded Real Time Clock (Synchronization with NTP server if 3G/UMTS module connected)
Totalizer	
MAG 8000	Totalizer 1 and Totalizer 2: Configurable to Forward, Reverse and Bidirectional netflow
	Totalizer 3: (following totalizer 1 setting) resetable via display key
Measurement	
Low flow cut-off	
• 7ME6810	Cut-off at 15 mm/s[1)]
• 7ME6820	Cut-off at 15 mm/s[1)]
Empty pipe detection	Symbolised in display
Data logger	Logging of 26 records: selectable as daily, weekly or monthly logging
Alarm	Active alarm is indicated on the display.
Data protection	All data stored in an EEPROM. Totalizers 1 and 2 are backed up every 10 min, statistic every hour and power consumption and temperature measurement every 4 hours.
	Password protection of all parameters and hardware protection of calibration and revenue parameters.
Battery power management	Optimal battery information on remaining capacity.
	Calculated capacity includes all consuming elements and available battery capacity is adjusted related to change in ambient temperature.
	Numbers of power-ups
	Date and time registered for first and last time power alarm.
Diagnostic	
Continuous self test including	Coil current to drive the magnetic field
	Signal input circuit
	Data calculation, handling and storing
Alarm statistics and logging for fault analyzing	Electrode impedance to check actual media contact
	Flow simulation to check pulse and communication signal chain for correct scaling
	Number of sensor measurements (excitations)
	Transmitter temperature (battery capacity calculation)
	Low impedance alarm for change in media
	Flow alarm when defined high flow exceeds
	Verification mode for fast measure performance check
Insulation test	Test of signal immunity against disturbance and bad installation. Test interval is selectable and measurement is interrupted during the test period of 4 min.

Features	
Leakage detection (only Advanced version)	Monitoring the lowest flow or volume during selected time window within 24 hours. Leakage is detected over a selectable period where monitored value exceed the possible leakage level. Min. and max. values are stored with date registration. Last store value visible on the display.
Meter Utilization (only Advanced version)	6 registers for monitoring total time the meter has operated in different flow intervals. Registered intervals are free selectable as % of Q_n (Q3).
Tariff (only Advanced version)	6 tariff registers count the volume delivered within the selected tariff windows, based on time of day or flow rates or a combination.
	Tariff can also be used for consumption profile where consumption is related to different time intervals or flow rates.
	Tariff values visible on the display.
Settling date (only Advanced version)	On a predefined date the totalizer 1 index value is stored. Old values are stored to show the latest two totalized 1 index values.
	Settling values visible on the display.
Statistic (only Advanced version)	Min. flow rate with time and date registration
	Max. flow rate with time and date registration
	Min. daily consumption with date registration
	Max. daily consumption with date registration
	Latest 7 days total and daily consumption
	Actual month consumption
	Latest month consumption
PC Configuration Software PDM	• Meter configuration – online and offline mode
	• Own parameter settings
	• Parameter documentation
	• Print and export of data and parameters
	PDM 9.0/9.1 Service Pack 1

[1)] Siemens warrants the measurement accuracy down to a flow velocity of 15 mm/s. For a flow velocity below 15 mm/s, we don't warrant the measurement accuracy.

© Siemens 2021

Technical specifications (continued)

MAG 8000 water meter uncertainty

To ensure continuous accurate measurement, flowmeters must be calibrated. The calibration is conducted at Siemens flow facilities with traceable instruments referring directly to the physical unit of measurement according to the International System of Units (SI).

Therefore, the calibration certificate ensures recognition of the test results worldwide, including the US (NIST traceability).

Siemens offers accredited calibrations assured to ISO 17025 in the flow range from 0.0001 m^3/h to 10 000 m^3/h. Siemens Flow Instruments accredited laboratories are recognized by ILAC MRA (International Laboratory Accreditation Corporation - Mutual Recognition Arrangement) ensuring international traceability and recognition of the test results worldwide.

The selected calibration determines the accuracy of the meter. A standard calibration results in max. ± 0.4 % uncertainty and an extended calibration ± 0.2 %. A calibration certificate follows every sensor and calibration data are stored in the meter unit.

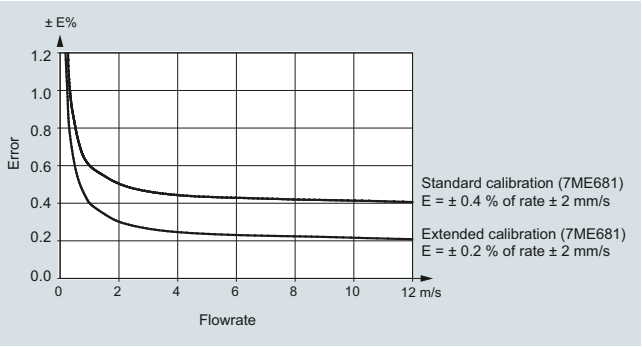

MAG 8000 (7ME6810) for Fire Service applications

MAG 8000 (7ME6810) is FM Fire Service approved for automatic fire protection systems according to the Fire Service Meters Standard, Class Number 1044. The approval is applicable for the sizes DN 50, DN 80, DN 100, DN 150, DN 200, DN 250, and DN 300 (2", 3", 4", 6", 8", 10", and 12") with ANSI B16.5 Class 150 flanges. The FM Fire Service approved product can be ordered via the Z-options P20, P21 and P22.

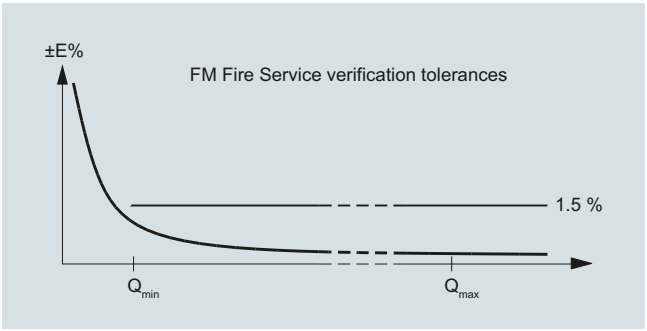

Grounding

The sensor body must be grounded using grounding straps and/or grounding rings to protect the flow signal against stray electrical noise. This ensures that the noise is carried through the sensor body and a noise-free measuring area within the sensor body. For MAG 8000 Irrigation grounding rings on both sides are factory-mounted.

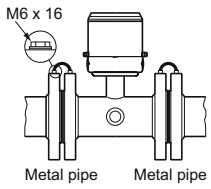

Metal pipes

On metal pipes, connect the straps to both flanges.

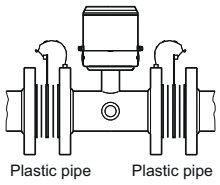

Plastic pipes

On plastic pipes and lined metal pipes, optional grounding rings must be used at both ends.

Grounding rings has to be ordered separately see “grounding ring kit”

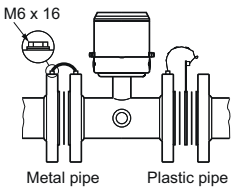

Combination of metal and plastic pipes

A combination of metal and plastic requires straps for metal pipe and grounding rings for plastic pipe.

© Siemens 2021

3

Technical specifications (continued)

Battery operation time and calculation

The battery operation time depends on the connected battery pack as well as the operation condition of the meter.

MAG 8000 calculates the remaining capacity every 4 hours and includes all consuming elements. Calculation compensates for temperature influence on battery capacity.

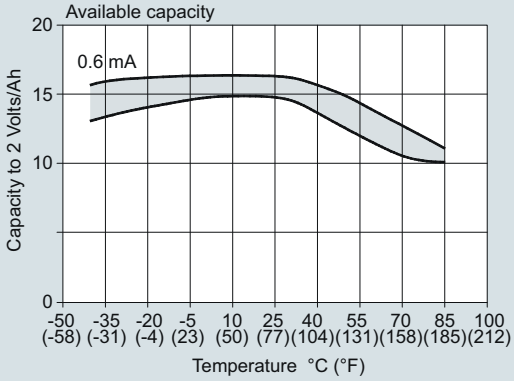

The grafic shows the effect from other temperatures. A variation in temperature from 15 °C to 55 °C (59 to 131 °F) reduces the capacity by 17 % in the table from 15 Ah to 12.5 Ah.

At typical revenue scenario of expected battery operation time can be seen in the table below.

The measurement for calculating the rest capacity of the battery life time is only completed if the system has no active fatal faults or the empty pipe is active. Maximum battery specification is 10 years operation.

Scenario - Revenue application	
Output A	Pulse rate max. 10 Hz
Output B	Alarm or call-up
Meter dialog	1 hour per month
Add-com	None
Temperature profile	• 5 % at 0 °C (32 °F)
	• 80 % at 15 °C (59 °F)
	• 15 % at 50 °C (122 °F)

Battery lifetime (subject to the assumptions mentioned above)

MAG 8000 for abstraction and distribution network applications (7ME6810) and MAG 8000 CT for revenue and bulk metering (7ME6820)								
Excitation frequency (24 h operation)		**1/60 Hz**	**1/30 Hz**	**1/15 Hz**	**1/5 Hz**	**1.5625 Hz**	**3.125 Hz**	**6.25 Hz**
2 D-Cell battery 33 Ah Internal battery pack	DN 25 … 150 (1" … 6")	9 years	9 years	7 years	43 months	8 months	3 months	2 months
	DN 200 … 600 (8" … 24")	9 years	6 years	4 years	22 months	3 months	1 month	N/A
	DN 700 … 1200 (28" … 48")	7 years	4 years	2 years	12 months	1 months	N/A	N/A
4 D-Cell battery 66 Ah External battery pack	DN 25 … 150 (1" ... 68")	15 years	15 years	14 years	86 months	16 months	7 months	4 months
	DN 200 ... 600 (8" ... 24")	15 years	13 years	8 years	44 months	7 months	3 months	N/A
	DN 700 ... 1200 (28" ... 48")	14 years	9 years	5 years	24 months	3 months	N/A	N/A

Typical battery lifetime scenario for MAG 8000 with 3G module	
Transmission once a day and MAG 8000 factory settings	
2 D-Cell battery 33 Ah Internal battery pack	3 ... 4 years
4 D-Cell battery 66 Ah External battery pack	7 ... 8 years

External battery pack can be used as battery backup for mains power supply (if two cable entries in one cable gland are needed, order cable glands with two entries, see accessories on page 3/141)

Serial RS 232/RS 485 add-on communication modules are designed for mains powered systems as the battery operation time will be reduced. At 1 hour communication per month (all meter data collected 2 times per day) and the module is connected, the operation time is reduced to:

- RS 232:
  - Switched on constantly:
    6.4 months for 2 D-cell internal battery pack / 12.8 months for 4 D-cell ext. battery pack
  - Switched on 2 s/day:
    39 months for 2 D-cell internal battery pack / 78 months for 4 D-cell ext. battery pack
- RS 485:
  - With the termination resistor on:
    2.3 months for 2 D-cell internal battery pack / 4.6 months for 4 D-cell ext. battery pack
  - With the termination resistor off:
    39 months for 2 D-cell internal battery pack / 78 months for 4 D-cell ext. battery pack, in case the entire communication time is less than 4 hours/day

© Siemens 2021

Dimensional drawings

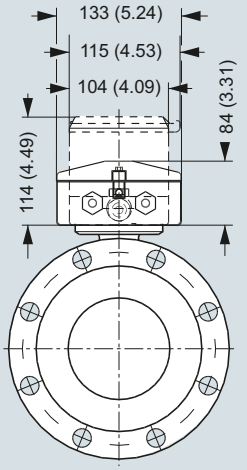

7ME6810/7ME6820

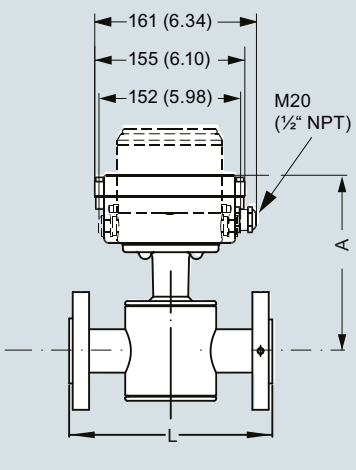

DN 25 and 40 (1" and 1½")

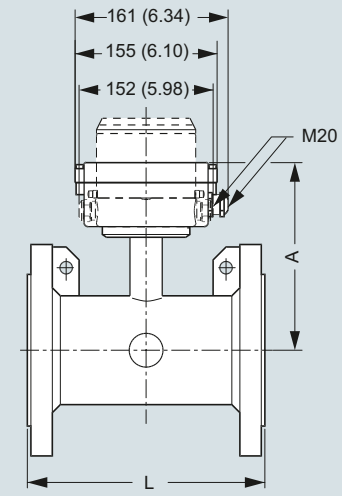

DN 50 ... 300 (2" ... 12")

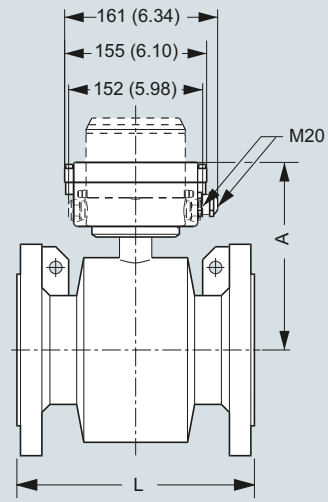

DN 350 ... 1200 (14" ... 48")

Dimensions in mm (inch)

Nominal DN size	A	L, lenghts[1]							Weight[2]	
	EPDM (7ME6810 and 7ME6820)	EN 1092-1 PN 10	EN 1092-1 PN 16/ PN 16 non-PED	EN 1092-1 PN 40	ANSI 16.5 Class 150	AS 4087 PN 16	AWA C-207 Class D	AS 2129		
mm (inch)	mm (inch)	mm	mm	mm	inch	mm	mm	mm	kg	lb
25 (1)	188 (7.4)	-	-	200	7.9	200	-	200	6	13
40 (1½)	203 (8.0)	-	-	200	7.9	200	-	200	9	20
50 (2)	178 (7.0)	-	200	-	7.9	200	-	-	11	25
65 (2½)	181 (7.1)	-	200	-	7.9	200	-	-	13	29
80 (3)	191 (7.5)	-	200	-	7.9	200	-	-	15	34
100 (4)	197 (7.8)	-	250	-	9.8	250	-	-	17	38
125 (5)	210 (8.3)	-	250	-	9.8	250	-	250	22	50
150 (6)	224 (8.8)	-	300	-	11.8	300	-	-	28	63
200 (8)	249 (9.8)	350	350	-	13.8	350	-	-	50	113
250 (10)	276 (10.9)	450	450	-	17.7	450	-	-	71	160
300 (12)	303 (11.9)	500	500	-	19.7	500	-	-	88	198
350 (14)	365 (14.4)	550	550	-	21.7	550	-	-	127	279
400 (16)	391 (15.4)	600	600	-	23.6	600	-	-	145	318
450 (18)	421 (16.6)	600	600	-	23.6	600	-	-	175	384
500 (20)	447 (17.6)	600	600	-	23.6	600	-	-	225	494
600 (24)	497 (19.6)	600	600	-	23.6	600	-	-	340	747
700 (28)	548 (21.6)	700	875/700	-	N/A	700	700	-	316	694
750 (30)	573 (22.6)	N/A	N/A	-	N/A	N/A	750	-	N/A	N/A
800 (32)	603 (23.7)	800	1000/800	-	N/A	800	800	-	398	1045
900 (36)	656 (25.8)	900	1125/900	-	N/A	900	900	-	476	1045
1000 (40)	708 (27.9)	1000	1250/1000	-	N/A	1000	1000	-	602	1322
1050 (42)	708 (27.9)	N/A	N/A	-	N/A	N/A	1050	-	N/A	N/A
1100 (44)	759 (29.9)	N/A	N/A	-	N/A	N/A	1100	-	N/A	N/A
1200 (48)	814 (32.0)	1200	1500/1200	-	N/A	1200	1200	-	887	1996

[1] Tolerances on built-in length: DN 15 to DN 200 (½" to 8"): +0/-3 mm (+0/-0.12"), DN 250 to DN 400 (10" to 16"): +0/-5 mm (+0/-0.20"), DN 450 to DN 600 (18" to 24"): +5/-5 mm (+0.20/-0.20"), DN 700 to DN 1200 (28" to 48"): +10/-10 mm (+0.39/-0.39").

[2] For remote version the sensor weight is reduced with 2 kg (4.5 lbs).

© Siemens 2021

3

Dimensional drawings (continued)

Remote version

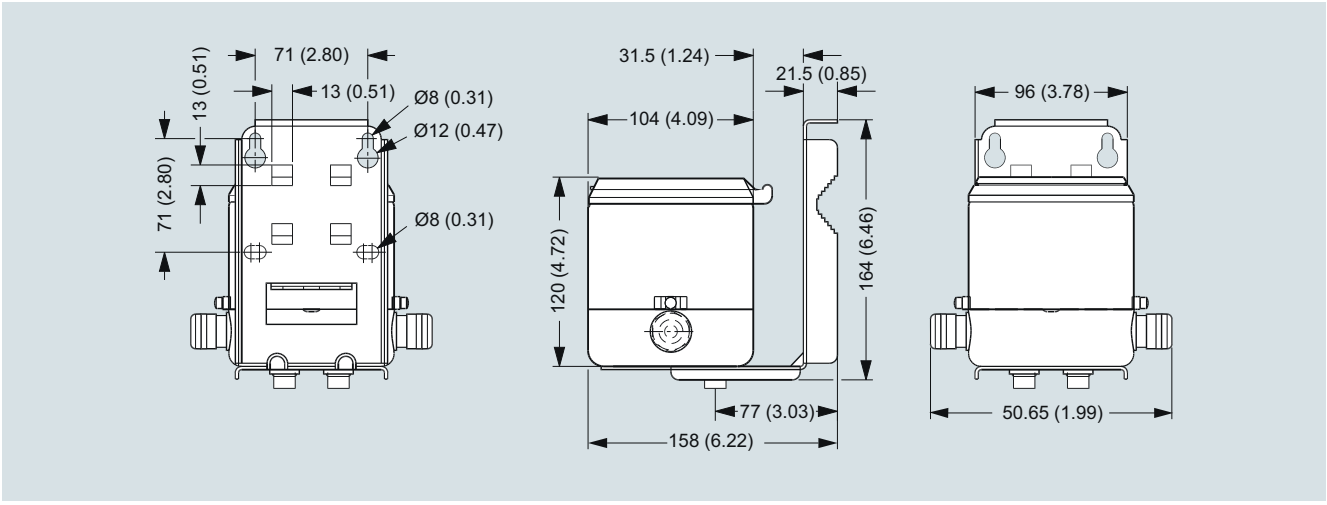

Dimensions in mm (inch), weight 3.5 kg (8 lbs)

External battery pack

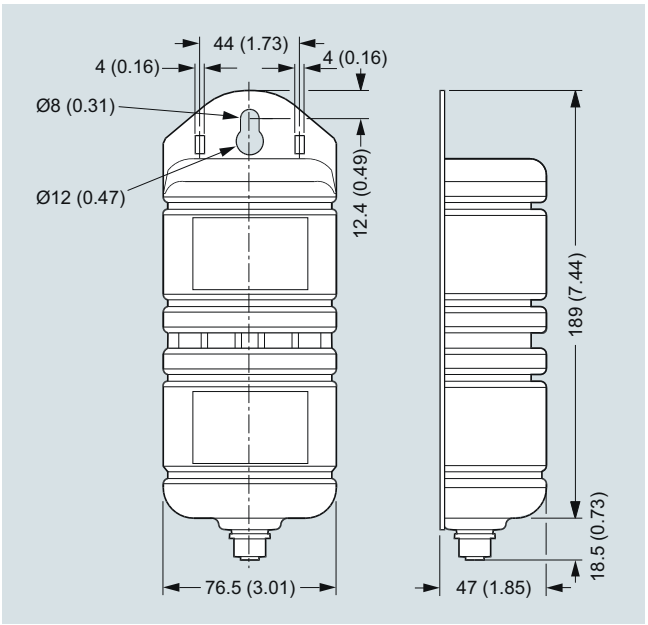

Dimensions in mm (inch), weight 2.0 kg (4.5 lbs)

Battery pack has to be mounted in upwards position to ensure maximum battery capacity.

Grounding rings

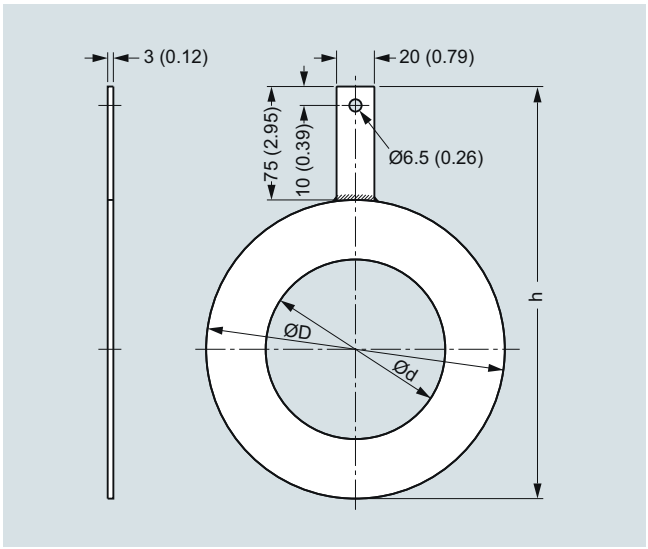

Dimensions in mm (inch) for grounding rings MAG 8000 with EPDM lining (7ME6810 and 7ME6820) DN 25 to DN 300

Dimension	Internal diameter (d)	Outside diameter (D)	h
DN 25	27	68	143
DN 40	38	88	163
DN 50	52	100	175
DN 65	64	120	195
DN 80	79	133	208
DN 100	95	158	233
DN 125	115	188	263
DN 150	145	216	291
DN 200	193	268	343
DN 250	246	324	399
DN 300	295	374	449

© Siemens 2021

Circuit diagrams

Electrical installation and pulse output – Connection diagram

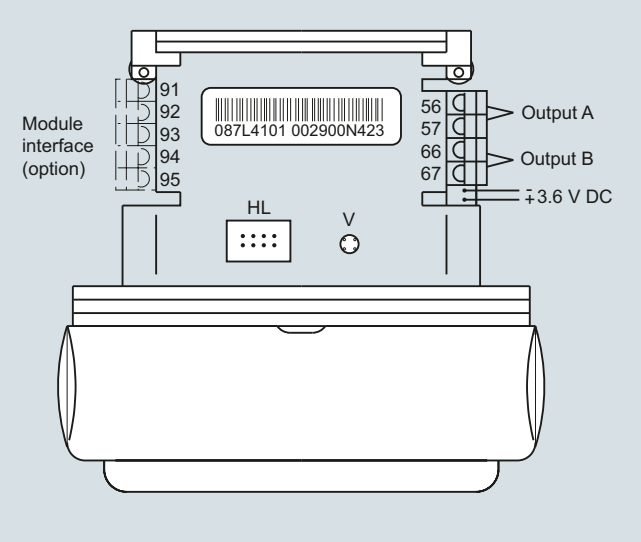

HL = Hardware lock key connection
V = Push button for verification mode

Pulse wire connection

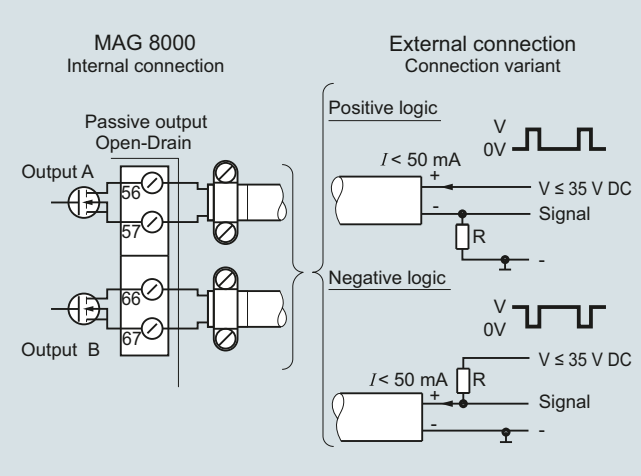

The pulse output can be configured as volume, alarm or call-up. The output can be connected as positive or negative logic.
R = pull up/down is selected in relation to the Vx power supply and with a max. current I of 50 mA.

Use shielded cable to avoid EMC problems. Make sure the shield is correctly mounted under the cable clamp (no pig tail).

© Siemens 2021

MAG 8000 for abstraction and distribution network application (7ME6810)

Overview



Benefits

Easy to install

- Compact or remote solution with factory mounted cable
- IP68/NEMA 6P enclosure. Sensor can be buried.
- Flexible power supply - internal or external battery pack or mains power supply with battery back-up possibilities

Long-term stability/Low cost of ownership

- No moving parts in a robust construction means less wear and tear
- Basic and advanced transmitter versions with different optional add-on communication modules fulfil various customer requirements for high cost efficiency
- Up to 0.2 % maximum uncertainty
- Bi-directional measurement with an outstanding low flow performance
- Up to 10 years maintenance-free operation in typical applications

Intelligent information, easy to access

- Advanced information on site
- Advanced statistics and diagnostics
- Optional high-performance 3G/UMTS module offers an efficient solution for remote measurement and monitor via wireless networks.

© Siemens 2021

Technical specifications

Meter	
Accuracy	Standard calibration: ± 0.4% ± 2 mm/s Extended calibration DN 50 … DN 300 (2" … 12"): ± 0.2 % of rate ± 2 mm/s
Low flow cut-off (default)	15 mm/s
Media conductivity	Clean water > 20 µs/cm
Temperature	
Ambient	-20 … +60 °C (-4 … +140 °F)
Media	0 … 70 °C (32 … 158 °F)
Storage	-40 … +70 °C (-40 … +158 °F)
Enclosure rating	
Remote sensor	IP68 to EN 60529/NEMA 6P, 10 mH_2O cont.
Compact version	IP68 to EN 60529/NEMA 6P, 3 mH_2O for six months
Certificates and approvals	
Calibration	
• Standard calibration	2 x 25 % and 2 x 90 % (default)
• Special calibration	5-point calibration: 20 %, 40 %, 60 %, 80 %, 100 % of factory Q_{max} 10-point calibration: ascending and descending at 20 %, 40 %, 60 %, 80 %, 100 % of factory Q_{max} Matched-pair calibration: default, 5-point, 10-point
Material certificate EN 10204-3.1	Available when ordering together with meter[1]
Drinking water approvals	• NSF/ANSI Standard 61[2] (cold water) USA • WRAS (BS 6920 cold water) UK • ACS Listed France • DVGW W270 Germany • Belgaqua (B) • MCERTS (GB)
Fire Service Approvals	FM Fire Service Meter (Class Number 1044)[3]
Conformity	• PED: 2014/68/EU[4] • EMC: IEC/EN 61326
Sensor version	DN 25 … 1200 (1" … 48")
Sensor material	Carbon steel ASTM A 105, with corrosion resistant coating of category C4 or C5 according to ISO 12944-2
Measuring principle	Electromagnetic induction
Excitation frequency	
Basic version	
• Battery-powered	DN 25 … 150 (1" … 6"): 1/15 Hz DN 200 … 600 (8" … 24"): 1/30 Hz DN 700 … 1200 (28" … 48"): 1/60 Hz
• Mains-powered	DN 25 … 150 (1" … 6"): 6.25 Hz DN 200 … 600 (8" … 24"): 3.125 Hz DN 700 … 1200 (28" … 48"): 1.5625 Hz

Meter	
Advanced version	
• Battery-powered	DN 25 … 150 (1" … 6"): 1/15 Hz (adjustable up to 6.25 Hz; reduced battery lifetime) DN 200 … 600 (8" … 24"): 1/30 Hz (adjustable up to 3.125 Hz; reduced battery lifetime) DN 700 ... 1200 (28" ... 48"): 1/60 Hz (adjustable up to 1.5625 Hz; reduced battery lifetime)
• Mains-powered	DN 25 ... 150 (1" ... 6"): 6.25 Hz DN 200 ... 600 (8" ... 24"): 3.125 Hz DN 700 ... 1200 (28" ... 48"): 1.5625 Hz
Flanges	
EN 1092-1 (DIN 2501)	DN 25 and DN 40 (1" and 1½"): PN 40 (580 psi) DN 50 ... 150 (2" ... 6"): PN 16 (232 psi) DN 200 ... 1200 (8" ... 48"): PN 10 or PN 16 (145 psi or 232 psi) DN 350 ... DN 600 (14" ... 24"): PN25 or PN40 (362 psi or 580 psi)
ANSI 16.5 Class 150	1" ... 24": 20 bar (290 psi)
AWWA C-207	28" ... 48": PN 10 (145 psi)
AS 4087	DN 50 … 1200 (2" … 48"): PN 16 (232 psi)
Liner	EPDM
Electrode and grounding electrodes	Hastelloy C276/2.4819
Grounding straps	Grounding straps are premounted from the factory on each side of the sensor.

1) Has to be ordered with the meter. It is not possible to order the certificate afterwards.
2) Including Annex G
3) Not for sensors with 300 µm coating.
4) For further information on PED standard and requirements see Pressure Equipment Directive in Appendix (chapter 10).

© Siemens 2021

MAG 8000 for abstraction and distribution network application (7ME6810)

Selection and ordering data

	Article No.
SITRANS F M MAG 8000 water meter ↗	**7ME6810-** ■■■■■-■■■■
↗ Click on the Article No. for the online configuration in the PIA Life Cycle Portal.	
Diameter	
DN 25 (1“)	**2 D**
DN 40 (1½“)	**2 R**
DN 50 (2“)	**2 Y**
DN 65 (2½“)	**3 F**
DN 80 (3“)	**3 M**
DN 100 (4“)	**3 T**
DN 125 (5“)	**4 B**
DN 150 (6“)	**4 H**
DN 200 (8“)	**4 P**
DN 250 (10“)	**4 V**
DN 300 (12“)	**5 D**
DN 350 (14“)	**5 K**
DN 400 (16“)	**5 R**
DN 450 (18“)	**5 Y**
DN 500 (20“)	**6 F**
DN 600 (24“)	**6 P**
DN 700 (28“)[1]	**6 Y**
DN 750 (30“)[1]	**7 D**
DN 800 (32“)[1]	**7 H**
DN 900 (36“)[1]	**7 M**
DN 1000 (40“)[1]	**7 R**
DN 1050 (42“)[1]	**7 U**
DN 1100 (44“)[1]	**7 V**
DN 1200 (48“)[1]	**8 B**
Flange norm and pressure rating	
EN 1092-1	
PN 10 (DN 200 ... 1200 (8“ ... 48“))	**B**
PN 16 (DN 50 ... 1200 (2“ ... 48“))	**C**
PN 16, non-PED (DN 700 ... 1200 (28“ ... 48“))	**D**
PN 25 (DN 350 ... 600 (12" ... 24"))	**E**
PN 40 (DN 25 ... 50 (1“ ... 1½“), DN 350 ... 600 (12" ... 24"))	**F**
ANSI B16.5	
Class 150	**J**
AWWA C-207	
Class D (28“ ... 48“)	**L**
AS 4087	
PN 16 (DN 50 ... 1200 (2" ... 48"))	**N**
Sensor version	
EPDM liner and Hastelloy electrodes, corrosion-resistant coating of category C4	**3**
EPDM liner and Hastelloy electrodes, 300 µm corrosion-resistant coating of category C5	**4**
Calibration	
Standard ± 0.4 % of rate ± 2 mm/s	**1**
Extended ± 0.2 % of rate ± 2 mm/s DN 50 ... 300 (2" ... 12")	**2**
NMI M 10 (2.5%) without verification	**3**

	Article No.
SITRANS F M MAG 8000 water meter	**7ME6810-** ■■■■■-■■■■
Region version	
Europe (m3, m3/h, 50 Hz)	**1**
USA (Gallon, GPM, 60 Hz)	**2**
Australia (Ml, Ml/d, 50 Hz)	**3**
Transmitter type and installation	
Basic version integral or sensor	**A**
Basic version, remote cables mounted on sensor with IP68/NEMA 6P plugs:	
• 5 m (16.4 ft)	**B**
• 10 m (32.8 ft)	**C**
• 20 m (65.6 ft)	**D**
• 30 m (98.4 ft)	**E**
Advanced version integral on sensor	**K**
Advanced version, remote cables mounted on sensor with IP68/NEMA 6P plugs:	
• 5 m (16.4 ft)	**L**
• 10 m (32.8 ft)	**M**
• 20 m (65.6 ft)	**N**
• 30 m (98.4 ft)	**P**
Communication interface	
No additional "add-on" communication module installed	**A**
Serial RS 485 with Modbus RTU (Terminated as end device)	**B**
Serial RS 232 with Modbus RTU	**C**
Encoder interface with Sensus protocol	**D**
3G/UMTS communication module with remote antenna; 5 m (16.4 ft) cable	**S**
3G/UMTS communication module with analog inputs and remote antenna; 5 m (16.4 ft) cable	**T**
Power supply	
Internal battery (no battery included)	**0**
Internal battery pack installed[1]	**1**
Power cable (1.5 m (4.9 ft)) with IP68/NEMA 6P plugs for external battery (no battery included)	**2**
12/24 V AC/DC power supply with battery backup and 3 m (9.8 ft) power cable for external connection (no battery included)	**3**
115 ... 230 V AC power supply with battery backup and 3 m (9.8 ft) power cable for external connection (no battery included)	**4**

[1] The Diameter DN 700 (28") to DN 1200 (48") is only available as remote transmitter type installation.

[2] Lithium batteries are subject to special transportation regulations according to United Nations "Regulation of Dangerous Goods, UN 3090 and UN 3091". Special transport documentation is required to observe these regulations. This may influence both transport time and costs.

© Siemens 2021

Selection and ordering data

	Order code
Additional information	
Please add "**-Z**" to Article No. and specify Order code(s) and plain text.	
Certificate	
Inspection certificate 3.1 (EN 10204) - pressure test	**C01**
Material certificate according to EN 10204-3.1[1)]	**C12**
Special calibration	
5-point calibration for DN 15 ... DN 200[2)]	**D01**
5-point calibration for DN 250 ... DN 600[2)]	**D02**
5-point calibration for DN 700 ... DN 1200[2)]	**D03**
10-point calibration for DN 15 ... DN 200[3)]	**D06**
10-point calibration for DN 250 ... DN 600[3)]	**D07**
10-point calibration for DN 700 ... DN 1200[3)]	**D08**
Default (2 × 25 % and 2 × 90 %) match-pair calibration for DN 15 ... DN 200	**D11**
Default (2 × 25 % and 2 × 90 %) match-pair calibration for DN 250 ... DN 600	**D12**
Default (2 × 25 % and 2 × 90 %) match-pair calibration for DN 700 ... DN 1200	**D13**
5-point, matched-pair calibration for DN 15 ... DN 200[2)]	**D15**
5-point, matched-pair calibration for DN 250 ... DN 600[2)]	**D16**
5-point, matched-pair calibration for DN 700 ... DN 1200[2)]	**D17**
10-point, matched-pair calibration for DN 15 ... DN 200[3)]	**D18**
10-point, matched-pair calibration for DN 250 ... DN 600[3)]	**D19**
10-point, matched-pair calibration for DN 700 ... DN 1200[3)]	**D20**
Flow unit	
l/s	**L00**
MGD	**L01**
CFS	**L02**
l/min	**L03**
m^3/min	**L04**
GPM	**L05**
CFM	**L06**
l/h	**L07**
m^3/h	**L08**
GPH	**L09**
CFH	**L10**
GPS	**L11**
Ml/d	**L12**
m^3/d	**L13**
GPD	**L14**
BBL42/s	**L15**
BBL42/min	**L16**
BBL42/h	**L17**
BBL42/d	**L18**
Totalizer	
Volume calculation (default totalizer 1= forward and totalizer 2 = reverse)	
Totalizer 1 = RV, reverse flow	**L20**
Totalizer 1 = NET, net flow	**L22**
Totalizer 2 = FW, forward flow	**L30**
Totalizer 2 = NET, net flow	**L31**

	Order code
Additional information	
Please add "**-Z**" to Article No. and specify Order code(s) and plain text.	
Volume unit	
m^3	**L40**
Ml	**L41**
G	**L42**
AF	**L43**
l x 100	**L44**
m^3 x 100	**L45**
G x 100	**L46**
CF x 100	**L47**
MG	**L48**
G x 1000	**L49**
CF x 1000	**L50**
Al	**L51**
kl	**L52**
BBL42 (US oil barrel, 1 barrel = 42 US gallons)	**L54**
Volume unit = AF, amount per pulse A = 1 US Gallon[5)]	**L55**
Volume unit = Al, amount per pulse A = 1 US Gallon[5)]	**L56**
Volume unit = CFx100, amount per pulse A = 1 US Gallon[5)]	**L57**
Volume unit = BBL42, amount per pulse A = 1 US Gallon[5)]	**L58**
Pulse set up	
(default pulse A = forward and pulse B = Alarm, pulse width = 50 ms)	
A function = RV, reverse flow	**L62**
A function = FWnet, forward net flow	**L63**
A function = RVnet, reverse net flow	**L64**
A function = Off	**L65**
Volume per pulse A = × 0.0001[4)]	**L70**
Volume per pulse A = × 0.001[4)]	**L71**
Volume per pulse A = × 0.01[4)]	**L72**
Volume per pulse A = × 0.1[4)]	**L73**
Volume per pulse A = × 1[4)]	**L74**
Pulse A pulse width 5 ms (volume per pulse × 1)	**L75**
Pulse A pulse width 10 ms (volume per pulse × 1)	**L76**
Pulse A pulse width 50 ms (volume per pulse × 1)	**L77**
Pulse A pulse width 100 ms (volume per pulse × 1)	**L78**
Pulse A pulse width 500 ms (volume per pulse × 1)	**L79**
B function = FW, forward flow	**L80**
B function = RV, verse flow	**L81**
B function = FWnet, forward net flow	**L82**
B function = RVnet, reverse net flow	**L83**
B function = Alarm	**L84**
B function = Call up	**L85**
Volume per pulse B = × 0.0001[4)]	**L90**
Volume per pulse B = × 0.001[4)]	**L91**
Volume per pulse B = × 0.01[4)]	**L92**
Volume per pulse B = × 0.1[4)]	**L93**
Volume per pulse B = × 1[4)]	**L94**

© Siemens 2021

MAG 8000 for abstraction and distribution network application (7ME6810)

Selection and ordering data	Order code
Additional information	
Please add "**-Z**" to Article No. and specify Order code(s) and plain text.	
Device operation	
Only operator menu activated	**M11**
Data logger set up (default month logging)	
DataloggerInterval = Daily	**M31**
DataloggerInterval = Weekly	**M32**
Factory mounted cables	
5 m (16.4 ft) pulse cable A+B	**M81**
5 m (16.4 ft) communication cable RS 232/RS 485 terminated as end device	**M82**
20 m (65.6 ft) pulse cable A+B	**M84**
20 m (65.6 ft) communication cable RS 232/RS 485 terminated as end device	**M85**
Cello 2 channel, input cable 3 m (9.84 ft) with Brad Harrison micro-change 3 way connector	**M87**
Cello 2 channel, input cable 5 m (16.4 ft) with MIL-C-26482 spec. connectors	**M89**
Encoder interface cable with connector for ITRON 200WP radio, lenght 25 ft	**M90**
Encoder interface cable with connector for ITRON 200WP radio, length 5 ft	**M91**
SOFREL cable 2 m for LS42 data logger	**M92**
Adaptors for conduit installation	**M94**
SOFREL cable 2 m for LS-Flow data logger	**M97**
FM Fire Service Approval	
(with ANSI B16.5 Class 150 flanges)	
DN 50, DN 80 and DN 100 (2", 3" and 4")	**P20**
DN 150 and DN 200 (6" and 8")	**P21**
DN 250 and DN 300 (10" and 12")	**P22**
Region/customer specific labels	
KCC label (South Korea)	**W28**
DIN 43863 label[1)]	**H21**
DIN 43863 label with SWM mark[1)]	**H22**
ADDC label	**H23**
Region specific settings	
Low flow cutoff = 5 mm/s	**M20**

1) Under preparation
2) 20 %, 40 %, 60 %, 80 %, 100 % of factory Q_{max}
3) Ascending and descending at 20 %, 40 %, 60 %, 80 %, 100 % of factory Q_{max}
4) Pulse width = 10 ms
5) Pulse width = 5 ms
6) Siemens warrants the measurement accuracy down to a flow velocity of 15 mm/s. For a flow velocity below 15 mm/s, we don't warrant the measurement accuracy

Operating instructions for SITRANS F M MAG 8000

Description	Article No.
• English	**A5E03071515**
• German	**A5E00740986**

All literature is available to download for free, in a range of languages, at
http://www.siemens.com/processinstrumentation/documentation

Operating instructions for MAG 8000 3G/UMTS communication module

Description	Article No.
• English	**A5E03644134**

© Siemens 2021

Overview



Benefits

Approvals

- MI-001, OIML R 49/OIML R 49 MAA
- FM Fire Service

Easy to install

- Compact or remote solution with factory mounted cable and customer setting from factory
- IP68/NEMA 6P enclosure. Sensor can be buried.
- Flexible power supply - internal or external battery pack or mains power supply with battery back-up possibilities

Long-term stability/Low cost of ownership

- No moving parts in a robust construction means less wear and tear
- Basic and advanced transmitter versions with different optional add-on communication modules fulfil various customer requirements for high cost efficiency
- Bi-directional measurement with an outstanding low flow performance
- Up to 10 years maintenance-free operation in typical applications
- Insignificant pressure drop

Intelligent information, easy to access

- Advanced information on site
- Advanced statistics and diagnostics
- Connectable to common AMR systems

© Siemens 2021

MAG 8000 CT for revenue and bulk metering (7ME6820)

Technical specifications

Meter	
Accuracy	OIML R 49/OIML R 49 MAA accuracy class I for DN 50, DN 350 ... DN 600 accuracy class II for DN 50 ... DN 600 MI-001 verification for DN 50 … DN 600 (2" … 24"), with Q3/Q1 = 315 FM Fire Service for DN 50, DN 80, DN 100, DN 150, DN 200, DN 250, and DN 300 (2", 3", 4", 6", 8", 10", and 12") ± 1,5 % (Q_{min} to Q_{max})
Low flow cut-off (default)	15 mm/s
Media conductivity	Clean water > 20 µs/cm
Temperature	
Ambient	-20 … +60 °C (-4 … +140 °F) MI-001: -25 ... +55 °C (-13 ... +131 °F)
Media	0.1 … 50 °C (32 … 122 °F)
Storage	-40 … +70 °C (-22 … +158 °F)
Enclosure rating	
Remote sensor	IP68 to EN 60529/NEMA 6P, 10 mH_2O cont.
Compact version	IP68 to EN 60529/NEMA 6P, 3 mH_2O for six months
Certificates and approvals	
Calibration (standard)	2 × 25 % and 2 × 90 %
Material certificate EN 10204-3.1	Available when ordering together with meter[1]
Drinking water approvals	• NSF/ANSI Standard 61[2] (cold water) USA • WRAS (BS 6920 cold water) UK • ACS Listed France • DVGW W270 Germany • Belgaqua (B) • MCERTS (GB)
Fire Service approval	FM Fire Service (1044)[3]
Custody transfer approval	• OIML R 49 and OIML R 49 MAA approval • MI-001 approval (DK-0200-MI001-011)
Conformity	• CEN EN 14154, ISO 4064 • PED: 2014/68/EU[4] For pressure/temperature curves see MAG 3100 on page 3/67 • EMC: IEC/EN 61326 • CRN (DN 50 ... DN 1200 (2" ... 48"))

Meter	
Sensor version	DN 50 … 600 (2" … 24")
Sensor material	Carbon steel ASTM A 105, with corrosion resistant coating of category C4 or C5 according to ISO 12944-2
Measuring principle	Electromagnetic induction
Excitation frequency	
Basic version	
• Battery-powered	DN 50 … 150 (2" … 6"): 1/15 Hz DN 200 … 600 (8" … 24"): 1/30 Hz
• Mains-powered	DN 50 … 150 (2" … 6"): 6.25 Hz DN 200 … 600 (8" … 24"): 3.125 Hz
Advanced version	
• Battery-powered	DN 50 … 150 (2" … 6"): 1/15 Hz (adjustable up to 6.25 Hz; reduced battery lifetime) DN 200 … 600 (8" … 24"): 1/30 Hz (adjustable up to 3.125 Hz; reduced battery lifetime)
• Mains-powered	DN 50 … 150 (2" … 6"): 6.25 Hz DN 200 … 600 (8" … 24"): 3.125 Hz
Flanges	
EN 1092-1 (DIN 2501)	DN 50 … 150 (2" … 6"): PN 16 (232 psi) DN 200 … 300 (8" … 12"): PN 10 or PN 16 (145 psi or 232 psi) up to DN 600 (24") in preparation
ANSI 16.5 Class 150	2" … 12": 20 bar (290 psi) up to DN 600 (24") in preparation
AWWA C-207	28" … 48": PN 10 (145 psi)
AS 4087	DN 50 … 300 (2" … 12"): PN 16 (232 psi) up to DN 600 (24") in preparation
Liner	EPDM
Electrode and grounding electrodes	Hastelloy C276/2.4819
Grounding straps	Grounding straps are premounted from the factory on each side of the sensor.

1) Has to be ordered with the meter. It is not possible to order the certificate afterwards.
2) Including Annex G
3) Not for sensors with 300 m coating.
4) For further information on the PED standard and requirements see Pressure Equipment Directive in Appendix (chapter 10).

© Siemens 2021

Technical specifications (continued)

MAG 8000 CT (Revenue program) water meter type approval

MAG 8000 CT program is type approved and verified according to international water meter standard OIML R 49.
The custody transfer program is approved as Class 1 (DN 50, DN 350 ... DN 600) and Class 2 (DN 50 ... DN 600), at different Q3 and Q3/Q1, according to OIML R 49:2013 specification.

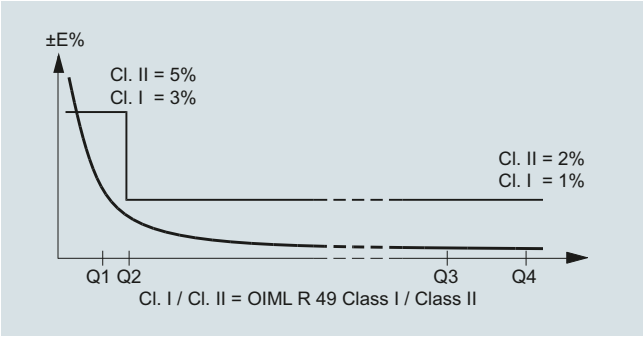

OIML R 49:2013 specification for Class 1[1)]

7ME6820	DN 50 (2")	DN 350 (14")	DN 400 (16")	DN 450 (18")	DN 500 (20")	DN 600 (24")
R (Q3/Q1)	**200**	**125**	**125**	**125**	**125**	**125**
Q4 [m^3/h]	78.75	3125	5000	5000	7875	7875
Q3 [m^3/h]	63	2500	4000	4000	6300	6300
Q2 [m^3/h]	0.5	32	51.2	51.2	80.64	80.64
Q1 [m^3/h]	0.32	20	32	32	50.4	50.4

OIML R 49:2013 specification for Class 2[1)]

	Horizontal installation													
7ME6820	**DN 50 (2")**	**DN 65 (2½")**	**DN 80 (3")**	**DN 100 (4")**	**DN 125 (5")**	**DN 150 (6")**	**DN 200 (8")**	**DN 250 (10")**	**DN 300 (12")**	**DN 350 (14")**	**DN 400 (16")**	**DN 450 (18")**	**DN 500 (20")**	**DN 600 (24")**
R (Q3/Q1)	**315**	**315**	**315**	**315**	**315**	**315**	**315**	**315**	**315**	**200**	**200**	**200**	**200**	**200**
Q4 [m^3/h]	78.75	125	200	312.5	500	787.5	1250	2000	2000	3125	5000	5000	7875	7875
Q3 [m^3/h]	63	100	160	250	400	630	1000	1600	1600	2500	4000	4000	6300	6300
Q2 [m^3/h]	0.32	0.51	0.81	1.27	2.03	3.2	5.08	8.13	8.13	20	32	32	50.4	50.4
Q1 [m^3/h]	0.2	0.32	0.51	0.79	1.27	2	3.18	5.08	5.08	12.5	20	20	31.5	31.5

[1)] The product will be delivered according to requested specifications, which may deviate from the specifications of the approval frame described in tables below.

© Siemens 2021

3

Technical specifications (continued)

MAG 8000 CT (Revenue program) MI-001

MAG 8000 CT program is type approved according to international water meter standard OIML R 49. Since the first November 2006 the MI-001 water meter directive is in force, which means that all water meters can be sold across the EU borders if the water meters contain a MI-001 label.

The MAG 8000 CT MI-001 verified and labeled products are a Class II aproval according to Directive 2014/32/EU of the European Parliament and Council of 26 February, 2014 on measuring instruments, Annex III Water meters (MI-001) in the sizes from DN 50 to DN 600.

The MID certification is obtained as a B + D module approval according to the above mentioned directive.

Module B: Type approval according to OIML R 49

Module D: Quality insurance approval of production

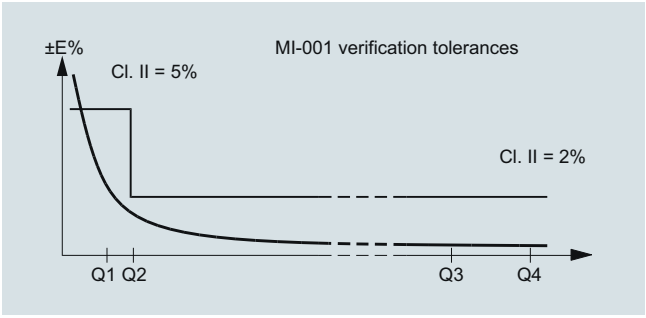

MAG 8000 CT MI-001 verified and labeled products at a given Q3 and Q4/Q3 = 1.25 and Q2/Q1 = 1.6 measuring ranges see below table:

	Horizontal installation													
7ME6820-xxxx1	**DN 50 (2“)**	**DN 65 (2½“)**	**DN 80 (3“)**	**DN 100 (4“)**	**DN 125 (5“)**	**DN 150 (6“)**	**DN 200 (8“)**	**DN 250 (10“)**	**DN 300 (12“)**	**DN 350 (14“)**	**DN 400 (16“)**	**DN 450 (18")**	**DN 500 (20")**	**DN 600 (24")**
R (Q3/Q1)	**40**	**40**	**40**	**40**	**40**	**40**	**40**	**40**	**40**	**40**	**40**	**40**	**40**	**40**
Q4 [m^3/h]	20	31.25	50	78.75	125	200	312.5	500	787.5	787.5	1250	2000	3125	5000
Q3 [m^3/h]	**16**	**25**	**40**	**63**	**100**	**160**	**250**	**400**	**630**	**630**	**1000**	**1600**	**2500**	**4000**
Q2 [m^3/h]	0.64	1	1.6	2.52	4	6.4	10	16	25.2	25.2	40	64	100	160
Q1 [m^3/h]	0.4	0.63	1	1.58	2.5	4	6.25	10	15.75	15.75	25	40	62.5	100

	Horizontal installation													
7ME6820-xxxx2	**DN 50 (2“)**	**DN 65 (2½“)**	**DN 80 (3“)**	**DN 100 (4“)**	**DN 125 (5“)**	**DN 150 (6“)**	**DN 200 (8“)**	**DN 250 (10“)**	**DN 300 (12“)**	**DN 350 (14“)**	**DN 400 (16“)**	**DN 450 (18")**	**DN 500 (20")**	**DN 600 (24")**
R (Q3/Q1)	**63**	**63**	**63**	**63**	**63**	**63**	**63**	**63**	**63**	**63**	**63**	**63**	**63**	**63**
Q4 [m^3/h]	20	31.25	50	79	125	200	312.5	500	788	1250	2000	3125	5000	7875
Q3 [m^3/h]	**16**	**25**	**40**	**63**	**100**	**160**	**250**	**400**	**630**	**1000**	**1600**	**2500**	**4000**	**6300**
Q2 [m^3/h]	0.41	0.64	1.02	1.6	2.54	4.06	6.35	10.16	16	25.4	40.63	63.49	101.59	160
Q1 [m^3/h]	0.25	0.4	0.64	1	1.59	2.54	3.97	6.35	10	15.88	25.4	39.68	63.49	100

© Siemens 2021

Technical specifications (continued)

	Horizontal installation													
7ME6820-xxxx3	**DN 50 (2“)**	**DN 65 (2½“)**	**DN 80 (3“)**	**DN 100 (4“)**	**DN 125 (5“)**	**DN 150 (6“)**	**DN 200 (8“)**	**DN 250 (10“)**	**DN 300 (12“)**	**DN 350 (14“)**	**DN 400 (16“)**	**DN 450 (18")**	**DN 500 (20")**	**DN 600 (24")**
R (Q3/Q1)	**80**	**80**	**80**	**80**	**80**	**80**	**80**	**80**	**80**	**80**	**80**	**80**	**80**	**80**
Q4 [m^3/h]	31.25	50	79	125	200	312.5	500	788	1250	2000	3125	3125	5000	7875
Q3 [m^3/h]	**25**	**40**	**63**	**100**	**160**	**250**	**400**	**630**	**1000**	**1600**	**2500**	**2500**	**4000**	**6300**
Q2 [m^3/h]	0.5	0.8	1.26	2	3.2	5	8	12.6	20	32	50	50	80	126
Q1 [m^3/h]	0.31	0.5	0.79	1.25	2	3.13	5	7.88	12.5	20	31.25	31.25	50	78.75

	Horizontal installation													
7ME6820-xxxx4	**DN 50 (2“)**	**DN 65 (2½“)**	**DN 80 (3“)**	**DN 100 (4“)**	**DN 125 (5“)**	**DN 150 (6“)**	**DN 200 (8“)**	**DN 250 (10“)**	**DN 300 (12“)**	**DN 350 (14“)**	**DN 400 (16“)**	**DN 450 (18")**	**DN 500 (20")**	**DN 600 (24")**
R (Q3/Q1)	**160**	**160**	**160**	**160**	**160**	**160**	**160**	**160**	**160**	**160**	**160**	**160**	**160**	**160**
Q4 [m^3/h]	50	79	125	200	312.5	500	788	1250	2000	3125	5000	5000	7875	7875
Q3 [m^3/h]	**40**	**63**	**100**	**160**	**250**	**400**	**630**	**1000**	**1600**	**2500**	**4000**	**4000**	**6300**	**6300**
Q2 [m^3/h]	0.4	0.63	1	1.6	2.5	4	6.3	10	16	25	40	40	63	63
Q1 [m^3/h]	0.25	0.39	0.63	1	1.56	2.5	3.94	6.25	10	15.63	25	25	39.38	39.38

	Horizontal installation								
7ME6820-xxxx5	**DN 50 (2“)**	**DN 65 (2½“)**	**DN 80 (3“)**	**DN 100 (4“)**	**DN 125 (5“)**	**DN 150 (6“)**	**DN 200 (8“)**	**DN 250 (10“)**	**DN 300 (12“)**
R (Q3/Q1)	**200**	**200**	**200**	**200**	**200**	**200**	**200**	**200**	**200**
Q4 [m^3/h]	78.75	125	200	312.5	500	787.5	1250	2000	2000
Q3 [m^3/h]	**63**	**100**	**160**	**250**	**400**	**630**	**1000**	**1600**	**1600**
Q2 [m^3/h]	0.5	0.8	1.28	2	3.2	5.04	8	12.8	12.8
Q1 [m^3/h]	0.32	0.5	0.8	1.25	2	3.15	5	8	8

	Horizontal installation								
7ME6820-xxxx6	**DN 50 (2“)**	**DN 65 (2½“)**	**DN 80 (3“)**	**DN 100 (4“)**	**DN 125 (5“)**	**DN 150 (6“)**	**DN 200 (8“)**	**DN 250 (10“)**	**DN 300 (12“)**
R (Q3/Q1)	**250**	**250**	**250**	**250**	**250**	**250**	**250**	**250**	**250**
Q4 [m^3/h]	78.75	125	200	312.5	500	787.5	1250	2000	2000
Q3 [m^3/h]	**63**	**100**	**160**	**250**	**400**	**630**	**1000**	**1600**	**1600**
Q2 [m^3/h]	0.4	0.64	1.02	1.6	2.56	4.03	6.4	10.24	10.24
Q1 [m^3/h]	0.25	0.40	0.64	1	1.6	2.52	4	6.4	6.4

The Label is placed on the side of the encapsulation.
An example of the product label is shown below:

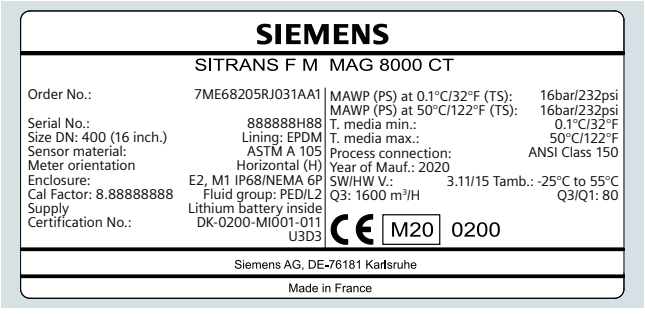

Installation conditions

Please refer to “System information SITRANS FM electromagnetic flowmeters”.

Battery operation time and calculation

The battery operation time depends on the connected battery pack as well as the operation condition of the meter.

MAG 8000 calculates the remaining capacity every 4 hours and includes all consuming elements. Calculation compensates for temperature influence on battery capacity (drawing).

MAG 8000 CT (7ME6820) for Fire Service applications

MAG 8000 CT (7ME6820) is FM Fire Service approved for automatic fire protection systems according to the Fire Service Meters Standard, Class Number 1044. The approval is applicable for the sizes 50, DN 80, DN 100, DN 150, DN 200, DN 250, and DN 300 (2", 3", 4", 6", 8", 10", and 12") with ANSI B16.5 Class 150 flanges. The FM Fire Service approved product can be ordered via the Z-options P20, P21 and P22.

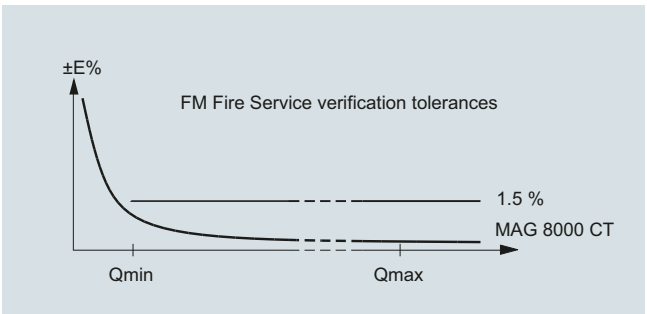

© Siemens 2021

MAG 8000 CT for revenue and bulk metering (7ME6820)

Selection and ordering data

	Article No.
SITRANS FM ↗	**7ME6820-**
MAG 8000 CT water meter with EPDM liner and Hastelloy electrodes	■■■■■■ - ■■■■
↗ Click on the Article No. for the online configuration in the PIA Life Cycle Portal.	
Diameter	
DN 50 (2“)	2 Y
DN 65 (2½“)	3 F
DN 80 (3“)	3 M
DN 100 (4“)	3 T
DN 125 (5“)	4 B
DN 150 (6“)	4 H
DN 200 (8“)	4 P
DN 250 (10“)	4 V
DN 300 (12“)	5 D
DN 350 (14")	5 K
DN 400 (16")	5 R
DN 450 (18")	5 Y
DN 500 (20")	6 F
DN 600 (24")	6 P
Flange norm and pressure rating	
EN 1092-1	
PN 10	B
PN 16	C
ANSI B16.5	
Class 150	J
AS4087	
PN 16	N
Sensor version	
EPDM liner and Hastelloy electrodes, corrosion-resistant coating of category C4	0
EPDM liner and Hastelloy electrodes, 300 µm corrosion-resistant coating of category C5	4
Approval/Verification[2]	
Without verification according to OIML R 49[3]	0
MI-001 Q3/Q1 = 40	1
MI-001 Q3/Q1 = 63	2
MI-001 Q3/Q1 = 80	3
MI-001 Q3/Q1 = 160	4
MI-001 Q3/Q1 = 200	5
MI-001 Q3/Q1 = 250	6
Without verification calibrated to OIML R 49-Class II (Q3/Q1 = 100)	7
Without verification calibrated to OIML R 49-Class II (Q3/Q1 = 250)	8
Region version	
Europe (m^3, m^3/h, 50 Hz)	1
USA (m^3, m^3/h, 60 Hz)	2

	Article No.
SITRANS FM	**7ME6820-**
MAG 8000 CT water meter with EPDM liner and Hastelloy electrodes	■■■■■ - ■■■■
Transmitter type and installation	
Basic version integral on sensor	A
Basic version, remote cables mounted on sensor with IP68/NEMA 6P plugs	
5 m (16.4 ft)	B
10 m (32.8 ft)	C
20 m (65.6 ft)	D
30 m (98.4 ft)	E
Advanced version integral on sensor	K
Advanced version, remote cables mounted on sensor with IP68/NEMA 6P plugs	
5 m (16.4 ft)	L
10 m (32.8 ft)	M
20 m (65.6 ft)	N
30 m (98.4 ft)	P
Communication interface	
No additional "add-on" communication module installed	A
Serial RS 485 with Modbus RTU (Terminated as end device)	B
Serial RS 232 with Modbus RTU	C
Encoder interface for ITRON 200WP radio with "Sensus" protocol"	D
3G/UMTS communication module with remote antenna; 5 m (16.4 ft) cable	S
3G/UMTS communication module with analog inputs and remote antenna; 5 m (16.4 ft) cable	T
Power supply	
Internal battery (no battery included)	0
Internal battery pack installed[1]	1
Power cable (1.5 m (4.9 ft)) with IP68/NEMA 6P plugs for external battery (no battery included)	2
12/24 V AC/DC power supply with battery backup and 3 m (9.8 ft) power cable for external connection (no battery included)	3
115 ... 230 V AC power supply with battery backup and 3 m (9.8 ft) power cable for external connection (no battery included)	4

[1] Lithium batteries are subject to special transportation regulations according to United Nations "Regulation of Dangerous Goods, UN 3090 and UN 3091". Special transport documentation is required to observe these regulations. This may influence both transport time and costs.

[2] For more details and references of the ranges please see the tables on the previous pages.

[3] Standard calibration or according to FM Fire Service requirements if P20, P21 or P22 is selected as Z option.

© Siemens 2021

Selection and ordering data

	Order code
Additional information	
Please add "**-Z**" to Article No. and specify Order code(s) and plain text.	
Inspection certificate 3.1 (EN 10204) - pressure test	**C01**
Material certificate according to EN 10204-3.1[1)]	**C12**
Totalizer	
Volume calculation (default totalizer 1= forward and totalizer 2 = reverse)	
Totalizer 1 = RV, reverse flow	**L20**
Totalizer 1 = NET, net flow	**L22**
Totalizer 2 = FW, forward flow	**L30**
Totalizer 2 = NET, net flow	**L31**
Pulse set up	
(default pulse A = forward and pulse B = Alarm, pulse width = 50 ms)	
A function = RV, reverse flow	**L62**
A function = FWnet, forward net flow	**L63**
A function = RVnet, reverse net flow	**L64**
A function = Off	**L65**
Volume per pulse A = x 0.001[2)]	**L71**
Volume per pulse A = x 0.01[2)]	**L72**
Volume per pulse A = x 0.1[2)]	**L73**
Volume per pulse A = x 1[2)]	**L74**
B function = FW, forward flow	**L80**
B function = RV, reverse flow	**L81**
B function = FWnet, forward net flow	**L82**
B function = RVnet, reverse net flow	**L83**
B function = Alarm	**L84**
B function = Call up	**L85**
Volume per pulse B = x 0.001[2)]	**L91**
Volume per pulse B = x 0.01[2)]	**L92**
Volume per pulse B = x 0.1[2)]	**L93**
Volume per pulse B = x 1[2)]	**L94**
Data logger set up (default month logging)	
DataloggerInterval = Daily	**M31**
DataloggerInterval = Weekly	**M32**
Factory mounted cables	
5 m (16.4 ft) pulse cable A+B	**M81**
5 m (16.4 ft) communication cable RS 232/RS 485 terminated as end device	**M82**
20 m (65.6 ft) pulse cable A+B	**M84**
20 m (65.6 ft) communication cable RS 232/RS 485 terminated as end device	**M85**
Cello 2 channel, input cable 3 m (9.84 ft) with Brad Harrison micro-change 3 way connector	**M87**
Cello 2 channel, input cable 5 m (16.4 ft) with MIL-C-26482 spec. connectors	**M89**
5 ft. Encoder interface cable with connector for ITRON 200WP radio	**M91**
25 ft. Encoder interface cable with connector for ITRON 200WP radio	**M90**
SOFREL cable 2 m for LS42 data logger	**M92**
SOFREL cable 2 m for LS-Flow data logger	**M97**

	Order code
Additional information	
Please add "**-Z**" to Article No. and specify Order code(s) and plain text.	
FM Fire Service Approval	
(with ANSI B16.5 Class 150 flanges)	
DN 50, DN 80 and DN 100 (2", 3" and 4")	**P20**
DN 150 and DN 200 (6" and 8")	**P21**
DN 250 and DN 300 (10" and 12")	**P22**
Region/customer specific label	
KCC label (South Korea)	**W28**
FP2E label (France)	**H20**
DIN 43863 label[1)]	**H21**
DIN 43863 label with SWM mark[1)]	**H22**
ADDC label	**H23**

1) Under preparation

2) Pulse width = 10 ms

Operating instructions for SITRANS F M MAG 8000

Description	Article No.
• English	**A5E03071515**
• German	**A5E00740986**

All literature is available to download for free, in a range of languages, at
http://www.siemens.com/processinstrumentation/documentation

Operating instructions for MAG 8000 3G/UMTS communication module

Description	Article No.
• English	**A5E03644134**

© Siemens 2021

MAG 8000 3G/UMTS Wireless Communication Module

Overview



3G/UMTS communication module



PC-IrDA connection

MAG 8000 3G/UMTS Wireless Communication Module

The 3G/UMTS wireless communication module is a compact built-in solution which can be installed in the existing MAG 8000 with SW version 3.02 and higher, supporting HSDPA cat. 8/HSUPA Cat.6 at 5 UMTS bands, with the ability to fall back to GSM/GPRS network in case there is no 3G signal.

The 3G/UMTS module collects comprehensive measurement data from MAG 8000 at an interval down to 1 minute, allows for data transmission via numerous protocols including SMS, email via SMTP, email via SMTPS (TLS/SSL-based encryption), FTP, and FTPS (TLS/SSL-based encryption, implicit), with a customer configurable transmission interval (down to 1 hour). This provides customers with the flexibility to receive data via email, FTP or text message for the monitoring and control systems anywhere in the world.

TLS/SSL based data encryption provides a high level information security to protect customers data privacy.

The 3G/UMTS module offers

- Remote Qualification Certificate feature to enable the offsite diagnostic and audit on devices installed anywhere in the world
- 2-channel analog input measurement for external ratiometric pressure transmitter, transmission together with flow measurement (2-in-1 solution)
- 4-20 mA alarm signal detection and realtime SMS alarm for tamper protection and flooding situations
- Real-time clock synchronization with internet NTP server, ensuring that all measurement data is accurately time-stamped
- Data transmission at customer-specified points in time, allowing for synchronization of information from multiple MAG 8000 devices

The OPC server specifically designed for the MAG 8000 3G/UMTS module is offered free of charge. With this value-added package, the opportunity for measurement data collection and further processing/analyzing for system integration and automation is offered.

The package of information retrieved via the csv file includes:

- Time stamp
- Flow rate
- Tot 1
- Tot 2
- Tot 3
- Analog 1 (mA)
- Analog 2 (V)
- Battery lifetime
- Alarm list (as decimal format)

Circuit diagrams

Electrical installation of 3G/UMTS module



1. SIM card slot
2. 3G module's antenna connector
3. Analog inputs inlet
4. Rechargeable battery inlet

© Siemens 2021

Selection and ordering data

Accessories

Description	Article No.	
PC Flow Tool on CD (Download for free from www.usa.siemens.com/flow)	**FDK:087L6001**	
IrDA infrared interface adapter with USB for data acquisition with 1.2 m (3.9 ft) cable	**FDK:087L4163**	
Battery backup for mains power supply, 1 pc. D-cell (3.6 V, 16.5 Ah)[1]	**A5E03354392**	
Rechargeable Lithium battery for MAG 8000 3G/UTMS communication module[1]	**A5E03436686**	
Internal battery pack, one set of 2 D-cell (3.6 V, 33 Ah) and accessories for replacement[1] incl. NBR O-ring	**FDK:087L4150**	
External battery pack IP68/ NEMA 6P with connector, 4 D-cell (3.6 V, 66 Ah)[1]. Order cable FDK:087L4152 separately.	**FDK:087L4151**	
Mains power supply 12 ... 24 V AC/DC (average power consumption during line ≤ 0.1 VA) with battery backup and 3 m (9.8 ft) power cable for external connection (backup battery not included) Temperature range: Fixed laying: -40 ... +90 °C (-40 ... +194 °F) Flexible application: -30 ... +80 °C (-22 ... +176 °F)	**FDK:087L4210**	
Mains power supply 115 ... 230 V AC, 50/60 Hz, with battery backup up and 3 m (9.8 ft) power cable for external connection (backup battery not included)	**FDK:087L4211**	
RS 232 add-on module, point to point communication interface with Modbus RTU protocol	**FDK:087L4212**	
RS 485 add-on module, multidrop communication interface with Modbus RTU protocol	**FDK:087L4213**	
Encoder interface module, with "Sensus" protocol for ITRON 200WP and 100W radio	**A5E02475650**	
MAG 8000 3G/UMTS module. Rechargeable battery, antenna and analog cable input must be ordered separately	**A5E41011589**	

Description	Article No.	
One cable entry 2 ... 5 mm (0.08 ... 0.20 ") M12 brass glands with M20 reduction[2] . Package of 10 pcs, for 3G/UMTS module antenna cable, power cable of external battery pack, encoder card cable.	**FDK:087L4154**	
One cable entry 6 ... 8 mm (0.24 ... 0.31 ") M20 brass glands package[2] (10 pcs), for pulse output cable or MODBUS cable, Cello cable or mains power supply	**FDK:087L4155**	
One cable entry 8 ... 11 mm (0.31 ... 0.43 ") M20 brass glands package[2] (10 pcs), for SOFREL cable	**FDK:087L4156**	
One cable entry 11 ... 15 mm (0.43 ... 0.59 ") M20 brass glands package[2] (10 pcs)	**FDK:087L4157**	
Two cable entries 3.5 ... 5 mm (0.14 ... 0.20 ") M20 brass glands package[2] (10 pcs)	**FDK:087L4158**	
Two cable entries 5.5 ... 7.5 mm (0.22 ... 0.30 "), M20 brass glands package[2] (10 pcs)	**FDK:087L4159**	
High gain antenna for MAG 8000 3G/UMTS (PVC, IP68, cable length 5 m (16.4 ft), with SMA male connector (type RG 58) and internal antenna adaptor cable, and single entry cable gland)	**A5E40957990**	
Analog input cable for MAG 8000 3G/UMTS (2.5 m (8.2 ft) cable with M12 connector (IP67) A-Coding female 5 pins, and two-entry cable gland)	**A5E03436698**	
Potting kit for terminal box of flow sensors for IP68/NEMA 6P	**FDK:085U0220**	
MAG 8000 Hardware key to access protected parameters	**FDK:087L4165**	
MAG 8000 demo - training unit pack operating on Alkaline batteries. Transmitter with Flow tool CD, IrDA interface adapter and hardware key (No dangerous goods limitations)	**FDK:087L4080**	
Antenna adaptor cable for 3G/UMTS module (2 pieces)	**A5E41896494**	

© Siemens 2021

3

Selection and ordering data (continued)

Description	Article No.	
Service adaptor for 3G/UMTS module	**A5E03436699**	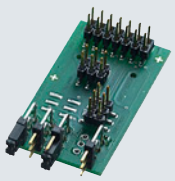
Alkaline battery for MAG 8000 demo transmitter (3 V 13 Ah) (No dangerous goods limitations)	**FDK:087L4142**	

[1] Lithium batteries are subject to special transportation regulations according to United Nations "Regulation of Dangerous Goods, UN 3090 and UN 3091". Special transport documentation is required to observe these regulations. This may influence both transport time and costs.

[2] For cable connection through MAG 8000 transmitter bottom part.

When MAG 8000 (7ME6810 and 7ME6820) is installed in PVC or coated pipelines, grounding rings must be installed additionally.

Grounding rings, type C must be used for the 7ME6810 and 7ME6820 routes (sizes > DN 300). Please see grounding rings in the section MAG 3100 Grounding rings and be aware that the mentioned MLFB codes include only 1 grounding ring. Grounding rings DN 25 to DN 300 in stainless steel are packed in pairs and sold as a "grounding ring kit".

Dimension	Article No.	
DN 25	**A5E01002946**	
DN 40	**A5E01002947**	
DN 50	**A5E01002948**	
DN 65	**A5E01002950**	
DN 80	**A5E01002952**	
DN 100	**A5E01002953**	
DN 125	**A5E01002954**	
DN 150	**A5E01002955**	
DN 200	**A5E01002957**	
DN 250	**A5E01002958**	
DN 300	**A5E01002962**	

Spare parts

Description	Article No.	
MAG 8000 transmitter compact replacement kit[1]. No battery included. With original product label. System number specified by ordering	**FDK:087L4166**	
MAG 8000 transmitter remote replacement kit[1] No battery included. With original product label. System number specified by ordering	**FDK:087L4202**	
MAG 8000 (Advanced version) transmitter compact replacement kit[1] No battery included. With blank product label. No system number required	**FDK:087L4203**	
MAG 8000 (Advanced version) transmitter remote replacement kit[1] No battery included No system number required	**FDK:087L4204**	
MAG 8000 (Basic version) transmitter PCB replacement kit[1] No system number required	**A5E01171569**	
MAG 8000 (advanced version) transmitter PCB replacement kit[1] No system number required	**FDK:087L4168**	
Enclosure top including plastic lid, screws, O-ring and blank product label	**FDK:087L4167**	
Power cable 1.5 m (4.9 ft) with IP68/NEMA 6P plugs for external battery (no battery included); PE jacket, ambient temperature: -20 °C ... +60 °C (-4 °F ... 140 °F)	**FDK:087L4152**	

© Siemens 2021

Selection and ordering data (continued)

Description	Article No.	
Encoder interface cable with IP68/NEMA 6P plugs included, for ITRON 200WP and 100W radio; 22 AWG stranded TC conductors, polypropylene insulation, twisted pair, overall Beldfoil shield, 22 AWG stranded TC drain wire, PVC jacket Lenght: 152.4 cm (5 ft)	**A5E02551263**	
Encoder interface cable with IP68/NEMA 6P plugs included, for ITRON 200WPradio; 22 AWG stranded TC conductors, polypropylene insulation, twisted pair, overall Beldfoil shield, 22 AWG stranded TC drain wire, PVC jacket Lenght: 762 cm (25 ft)	**A5E02551182**	
Service tool kit package with various component for service and replacement. Content: 10 × plastic top lids 20 × screws 10 × wire holders 10 × battery cups 10 × greased O-rings 20 × clamp kits 10 × IrDA adaptor holding rings	**FDK:087L4162**	
Remote cable set with IP68/NEMA 6P plugs:		
• 5 m (16.4 ft) – PG 13.5[2]	**FDK:087L4108**	
• 5 m (16.4 ft) – M20	**A5E00862482**	
• 10 m (32.8 ft) – PG 13.5[2]	**FDK:087L4109**	
• 10 m (32.8 ft) – M20	**A5E00862487**	
• 20 m (65.6 ft) – PG 13.5[2]	**FDK:087L4110**	
• 20 m (65.6 ft) – M20	**A5E00862492**	
• 30 m (98.4 ft) – PG 13.5[2]	**FDK:087L4111**	
• 30 m (98.4 ft) – M20	**A5E00862497**	
Cable set with pre-mounted conduit adaptor		
• 10 m	**A5E33400834**	
• 20 m	**A5E33400836**	

[1] Not applicable to custody transfer (CT) verified systems without re-verification

[2] For sensors produced before October 2007

MAG 8000 (7ME6880) grounding ring service kit, consisting of 2 pcs. grounding rings (AISI 304/1.4301), screws and gaskets.

Dimension		Article No.	
Drilled pattern flanges (7 bar)			
DN 50	2"	**A5E03082907**	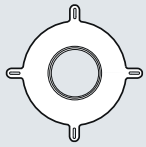
DN 65	2½"	**A5E03082908**	
DN 80	3"	**A5E03082909**	
DN 100	4"	**A5E03082910**	
DN 125	5"	**A5E03082911**	
DN 150	6"	**A5E32877967**	
DN 200	8"	**A5E03082913**	
DN 250	10"	**A5E03082914**	
DN 300	12"	**A5E03082915**	
DN 350	14"	**A5E03082916**	
DN 400	16"	**A5E03082917**	
DN 450	18"	**A5E03082918**	
DN 500	20"	**A5E03082919**	
DN 600	24"	**A5E03082920**	
AS 2191 table E flanges			
DN 25	1"	**A5E33474999**	
DN 40	1½"	**A5E33475000**	
DN 125	5"	**A5E33475006**	
AS 4087 PN 16 flanges			
DN 50	2"	**A5E33475001**	
DN 65	2½"	**A5E33475002**	
DN 80	3"	**A5E33475003**	
DN 100	4"	**A5E33475004**	
DN 150	6"	**A5E33475007**	
DN 200	8"	**A5E33475008**	
DN 250	10"	**A5E33475009**	
DN 300	12"	**A5E33475010**	
DN 350	14"	**A5E33475011**	
DN 400	16"	**A5E33475012**	
DN 450	18"	**A5E34240921**	
DN 500	20"	**A5E33475013**	
DN 600	24"	**A5E33475014**	
DN 700	28"	**A5E33414889**	
DN 800	32"	**A5E33414890**	
DN 900	36"	**A5E33414891**	
DN 1000	40"	**A5E33414892**	
DN 1200	48"	**A5E33414893**	

Operating instructions for SITRANS F M MAG 8000

Description	Article No.
• English	**A5E03071515**
• German	**A5E00740986**

All literature is available to download for free, in a range of languages, at
http://www.siemens.com/processinstrumentation/documentation

Operating instructions for MAG 8000 3G/UMTS communication module

Description	Article No.
• English	**A5E03644134**

© Siemens 2021

Overview



SITRANS FC Coriolis mass flowmeters are designed for measurement of a variety of liquids and gases. The meter offers accurate measurement of mass flow, volume flow, density, temperature and fraction.

Compatibility between transmitters and sensors

Transmitter	Page	Compact	Remote	Ex-Approval	Sensor	Page
FCT030	3/155	Yes	Yes	Yes	FCS300, DN 15 ... DN 150	3/167
		Yes	Yes	Yes	FCS400, DN 15 ... DN 50	3/187
		No	Yes	Yes	MASS 2100, DI 1.5	3/203; 3/218
		Yes	Yes	Yes	MASS 2100, DI 3 ... DI 15	3/203; 3/218
		No	Yes	Yes	FC300, DN 4	3/203; 3/218
FCT010	3/161	Yes	No	Yes	FCS300, DN 15 ... DN 150	3/167
		Yes	No	Yes	FCS400, DN 15 ... DN 50	3/187
		No	Yes	Yes	MASS 2100, DI 1.5	3/203; 3/223
		Yes	Yes	Yes	MASS 2100, DI 3 ... DI 15	3/203; 3/223
		No	Yes	Yes	FC300, DN 4	3/203; 3/223
FCT070	3/164	No	Yes	Yes	FCS300, DN 15 ... DN 150	3/167
		No	Yes	Yes	FCS400, DN 15 ... DN 50	3/187
		No	Yes	Yes	MASS 2100, DI 1.5	3/203; 3/227
		No	Yes	Yes	MASS 2100, DI 3 ... DI 15	3/203; 3/227
		No	Yes	Yes	FC300, DN 4	3/203; 3/227
SIFLOW FC070	3/240	No	Yes	Yes	FC300, DN 4	3/203
		No	Yes	Yes	MASS 2100, DI 1.5	3/203
		No	Yes	Yes	MASS 2100, DI 3 ... DI 15	3/203

© Siemens 2021

Benefits

Greater flexibility

- Wide product program
- High performance and top-end flowmeters
- Compact or remote installation using the same transmitters and sensors within their flowmeter series
- Full integration in SIMATIC solutions

Easier commissioning

All SITRANS FC Coriolis flowmeters feature a sensor related memory unit SensorFlash which stores calibration data and transmitter settings for the lifetime of the product as well as all product documentation and certificates.

At commissioning the flowmeter commences measurement without any initial programming.

Easier service

- Comprehensive self-diagnosis and service menu enhances troubleshooting and meter verification.
- Transmitter replacement requires no programming. SensorFlash data updates all settings after initialization.

Room for growth

- FC330/FC310:
  Digital platform allows for any sensor in the range DN 15 to DN 150 to be matched in compact or remote installation.
- FC430/FC410:
  Robust and compact sensor dedicated for OEM and skid manufacturer in sizes DN 15 to DN 50. Also available in a true sanitary version.
- MASS 2100/FC300 DN 4 sensors with FCT digital platform transmitters allows all sensors from DI 1.5 to DI 15 to be matched with the FCT010, FCT030 and FCT070 transmitters.
- FCT070 transmitter solution as a fully integrated technology module in SIMATIC ET 200SP. Seamless communicating with all SIMATIC solutions by very fast PROFINET communication. Advanced batch function blocks are available.

Application

Coriolis flowmeters are generally suitable for measuring liquids and gases. The flow measurement is to a large extend independent of changes in process conditions/parameters such as temperature, density, pressure, viscosity, conductivity and flow profile.

Due to this versatility the meter is easy to install and use. The Coriolis flowmeter is recognized for its high accuracy over a wide turn-down ratio and its ability to be a true multi parameter devise.

The main applications of the Coriolis flowmeter can be found in all industries, such as:	
Chemical	Detergents, bulk chemicals, pharmaceuticals, acids, alkalis, filling and dosing
Food and beverage	Dairy products, beer, wine, softdrinks, °Plato/°Brix, fruit juices and pulps, bottling, CO2 dosing, CIP liquids
Automotive	Fuel injection nozzle and pump testing, filling of AC units, engine consumption measurement, paint robots
Oil and gas	Filling of gas bottles, furnace control, test separators, LPG, well-head water-cut monitoring. All hydrocarbon fluids in refineries
Marine	Fuel consumption management, boiler control, bunkering management
Water & waste water	Dosing of chemicals for water treatment

© Siemens 2021

Application (continued)

Please see Product selector

www.pia-selector.automation.siemens.com

on the Internet, since some constrains might be related to some of the features

PIA Life Cycle Portal
The tool for Engineering, Ordering, Installation and Operation



	FC310	FC330	FCS300 with FCT070	FC410	FC430	FCS400 with FCT070	MASS 2100 DI 1.5 FC300 DN 4 with FCT010	MASS 2100 DI 1.5 FC300 DN 4 with FCT030	MASS 2100 DI 1.5 FC300 DN 4 with FCT070	MASS 2100 with FCT010	MASS 2100 with FCT030	MASS 2100 with FCT070
	7ME4631	7ME4633	7ME4637	7ME4611	7ME4613	7ME4617	7ME4811	7ME4813	7ME4817	7ME4811	7ME4813	7ME4817
Design												
Compact	●	●		●	●					●	●	
Remote		●	●		●	●	●	●	●	●	●	●
Transmitter enclosure												
Aluminium IP67 Field mounting enclosure	●	●		●	●		●	●		●	●	
Aluminum IP67 Wall mounting enclosure		●			●			●			●	
Noryl (FCT070), IP20/NEMA 2			●			●			●			●
Communication												
HART		●			●			●			●	
PROFIBUS PA		●			●			●			●	
PROFIBUS DP		●			●			●			●	
MODBUS RTU/RS 485	●	●		●	●		●	●		●	●	
SIMATIC integration ET200SP ST & HF (Profinet)			●			●			●			●
Supply voltage												
24 V DC	●	●	●	●	●	●	●	●	●	●	●	●
115/230 V AC		●			●			●			●	
Pipe size												
DI 1,5 (1/16")							●	●	●			
DI 3 (1/8")										●	●	●
DN 4 (1/6")							●	●	●			
DI 6 (¼")										●	●	●
DI 15 (½")										●	●	●
DN 15 (½")	●	●	●	●	●	●						
DN 25 (1")	●	●	●	●	●	●						
DN 50 (2")	●	●	●	●	●	●						
DN 80 (3")	●	●	●									
DN 100 (4")	●	●	●									
DN 150 (6")	●	●	●									

© Siemens 2021

Application (continued)

Please see Product selector

www.pia-selector.automation.siemens.com

on the Internet, since some constrains might be related to some of the features

PIA Life Cycle Portal
The tool for Engineering, Ordering, Installation and Operation



	FC310	FC330	FCS300 with FCT070	FC410	FC430	FCS400 with FCT070	MASS 2100 DI 1.5 FC300 DN 4 with FCT010	MASS 2100 DI 1.5 FC300 DN 4 with FCT030	MASS 2100 DI 1.5 FC300 DN 4 with FCT070	MASS 2100 with FCT010	MASS 2100 with FCT030	MASS 2100 with FCT070
	7ME4631	7ME4633	7ME4637	7ME4611	7ME4613	7ME4617	7ME4811	7ME4813	7ME4817	7ME4811	7ME4813	7ME4817
Process connection norms and pressure												
Pipe thread												
NPT ANSI/ASME B.20.1; PN 100	●	●	●	●	●	●	●	●	●	●	●	●
ISO 228/1; PN 100	●	●	●	●	●	●	●	●	●	●	●	●
Flange												
EN 1092-1 PN 16	●	●	●	●	●	●						
EN 1092-1 PN 40	●	●	●	●	●	●				●	●	●
EN 1092-1 PN 63	●	●	●	●	●	●						
EN 1092-1 PN 100	●	●	●	●	●	●				●	●	●
ANSI B 16.5 Class 150	●	●	●	●	●	●				●	●	●
ANSI B 16.5 Class 300	●	●	●	●	●	●						
ANSI B 16.5 Class 600	●	●	●	●	●	●				●	●	●
ANSI B 16.5 Class 900[1)]	●	●	●	●	●	●						
ANSI B 16.5 Class 1500[1)]	●	●	●									
JIS B2220 10K	●	●	●	●	●	●						
JIS B2220 20K	●	●	●	●	●	●						
JIS B2220 40K	●	●	●									
JIS B2220 63K	●	●	●									
Hygenic												
DIN 11851	●	●	●	●	●	●				●	●	●
DIN32676 Clamp Form C Triclamp				●	●	●						
DIN 32676 Clamp (ISO) Row A	●	●	●									
DIN11864-1 GS Form A Row A				●	●	●						
DIN11864-2 BF Form A Row A				●	●	●						
DIN11864-3 BKS Form A Row A				●	●	●						
ISO 2852 Clamp				●	●	●				●	●	●
ISO 2853 Threat				●	●	●				●	●	●
SMS 1145	●	●	●	●	●	●						
Others on request	●	●	●	●	●	●				●	●	●

© Siemens 2021

Application (continued)

Please see Product selector

www.pia-selector.automation.siemens.com

on the Internet, since some constrains might be related to some of the features

PIA Life Cycle Portal
The tool for Engineering, Ordering, Installation and Operation



	FC310	FC330	FCS300 with FCT070	FC410	FC430	FCS400 with FCT070	MASS 2100 DI 1.5 FC300 DN 4 with FCT010	MASS 2100 DI 1.5 FC300 DN 4 with FCT030	MASS 2100 DI 1.5 FC300 DN 4 with FCT070	MASS 2100 with FCT010	MASS 2100 with FCT030	MASS 2100 with FCT070
	7ME4631	7ME4633	7ME4637	7ME4611	7ME4613	7ME4617	7ME4811	7ME4813	7ME4817	7ME4811	7ME4813	7ME4817
Pipe material												
Stainless steel AISI 316L/1.4435/1.4404	●	●	●	●	●	●	●	●	●	●	●	●
Nickel-Alloy C4	●	●	●									
Hastelloy C22/2.4602							●	●	●	●	●	●
With heating jacket												
Internal U-Tube										●	●	●
Heating jacket electrical (optional)				●	●	●						
Pressure rating												
PN 16	●	●										
PN 40	●	●		●						●	●	●
PN 63	●	●		●								
PN 100	●	●	●	●	●	●	●	●	●	●	●	●
PN 130							●	●	●	●	●	●
PN 160					●[5]	●[5]	●[5]					
PN 230						●	●	●	●	●	●	●
PN 265										●	●	●
PN 350						●				●	●	●
PN 365							●	●	●	●	●	●
PN 410										●	●	●
High-pressure version[2]							●	●	●	●	●	●
Accuracy (liquids)												
Flow error ≤ 0.1 % of rate[3]	●	●	●	●	●	●	●	●	●	●	●	●
Flow error ≤ 0.2 % of rate[3]	●	●	●									
Density error ≤ 0.0005 g/cm³				●	●	●				●	●	●
Density error ≤ 0.005 g/cm³				●	●	●				●	●	●
Density error ≤ 0.001 g/cm³							●	●	●			
Density error ≤ 0.002 g/cm³	●	●	●									
Density error ≤ 0.010 g/cm³	●	●	●									
Cable glands												
½" NPT	●	●	●	●	●	●	●	●	●	●	●	●
M20	●	●	●	●	●	●	●	●	●	●	●	●

© Siemens 2021

Application (continued)

Please see Product selector

www.pia-selector.automation.siemens.com

on the Internet, since some constrains might be related to some of the features

PIA Life Cycle Portal
The tool for Engineering, Ordering, Installation and Operation



	FC310	FC330	FCS300 with FCT070	FC410	FC430	FCS400 with FCT070	MASS 2100 DI 1.5 FC300 DN 4 with FCT010	MASS 2100 DI 1.5 FC300 DN 4 with FCT030	MASS 2100 DI 1.5 FC300 DN 4 with FCT070	MASS 2100 with FCT010	MASS 2100 with FCT030	MASS 2100 with FCT070
	7ME4631	7ME4633	7ME4637	7ME4611	7ME4613	7ME4617	7ME4811	7ME4813	7ME4817	7ME4811	7ME4813	7ME4817
Approvals												
Hazardous locations												
ATEX zone 1	●	●	●	●[6]	●[6]	●[6]	●	●	●	●	●	●
IECEx zone 1	●	●	●	●[6]	●[6]	●[6]	●	●	●	●	●	●
EAC Ex zone 1	●	●	●	●	●	●	●	●	●	●	●	●
US /CSA) Div 1	●	●	●	●	●	●	●	●	●	●	●	●
Canada (CSA) zone 1	●	●	●	●	●	●	●	●	●	●	●	●
NEPSI	●	●	●	●	●	●						
INMETRO	●	●	●	●	●	●						
PED												
Fluid group 1 Category III, gas PED Directive 2014/68/EU	●	●	●	●	●	●	●	●	●	●	●	●
CRN												
Category F, OF10769.5C CRN	●	●	●	●	●	●	●	●	●	●[4]	●[4]	●[4]
F&B/Pharma												
EHEDG (in preparation)				●	●	●						
3A (in preparation)				●	●	●						
Marine												
Germanischer Lloyd/det Norske Veritas, Bureau Veritas, Lloyds of London, American Bureau of Shipping, Rina, CCS	●	●		●	●							

● = Available

1) Sensor pressure and temperature limited to ANSI class 600 rating.
2) See technical specifications.
3) Increased error for gas mass flow measurement.
4) Only DI 6 is CRN.
5) Max. 100 bar.
6) Also for dust zone 21.

© Siemens 2021

3

Function

The SITRANS FC flow measuring principle is based on the Coriolis effect. The flowmeter consists of a sensor and a transmitter. The sensor can be digital with an integrated frontend DSL or for low flow sensors also analogue sensors directly connected to the transmitter.

There are following sensors available:

- SITRANS FC MASS 2100 DI 1.5 to DI 15 mm in a single loop design
- SITRANS FC300 DN 4 in a single loop design
- SITRANS FCS300 DN 15 to DN 150 mm in bended dual tube design
- SITRANS FCS400 DN 15 to DN 50 mm in a compact bended dual tube design for OEM and other specific applications.

All sensors can be freely combined with three different transmitters in various configurations and protection style.

- SITRANS FCT010 transmitter: single channel Modbus
- SITRANS FCT030 transmitter: multi channel transmitter with full graphical display and full feature loaded.
- FCT070 transmitter: for full integration in the Siemens SIMATIC TIA and PCS7 world by the ET 200SP ST & HF. Full functionality including advanced functions blocks for easy integration. Functions block in TIA and APL library.

The SITRANS FC sensors are energized by an electro-mechanical driver circuit which oscillates the pipe at its resonant frequency.

Two pick-ups, 1 and 2 are placed symmetrically on both sides of the driver. When liquid or gas flows through the sensor, Coriolis force will act on the measuring pipe and cause a pipe deflection which can be measured as a phase shift on pick-up 1 and 2. The phase shift is proportional to the mass flow rate.

The amplitude of the driver is automatically regulated to ensure a stable output from the 2 pick-ups. The temperature of the tubes is measured by a Pt1000. The flow-proportional signal from the 2 pick-ups, the temperature measurement and the driver frequency are fed into the SITRANS FC transmitter for calculations of mass, volume, fraction, temperature and density.The signal transfer function is based on a DFT technology (Discrete Fourier Transformation).

The transmitter has built-in noise filters, which can be used to improve the meter's performance if the installation and application conditions are not ideal. Typically influence from process noise such as pump pulsations, mechanical vibrations, oscillating valves and aerated flowconditions can be reduced considerably.



SensorFlash flow memory units

FCT010 flow transmitters communicate via Modbus RTU and FCT030 via HART/Modbus/PROFIBUS DP / PROFIBUS PA beside up to 4 individual I/O free programmable as analogue , frequency, pulse or relay outputs. As well as static inputs can be set up.

The FCT070 transmitter is a technology module for the SIMATIC ET 200SP ST & HF system with directly connection from the digital sensor. Full transmitter functionality available to be set up directly in the SIMATIC system. The ET 200SP is very often connected to other SIMATIC systems like PCS7; S7 1200 and S7 1500 via the direct connection by PROFINET. Fast and simple signal transfer and controlling.

© Siemens 2021

Integration

General installation requirements / System design information

The SITRANS FC mass flowmeter is suitable for in- and outdoor installations. The standard instrument meets the requirements of Protection Class IP67/NEMA 4x or IP65. The flowmeter is bidirectional and can be installed in almost any orientation, however, the sensor is not self-emptying in all positions.

It is important to ensure that the meter tubes are always completely filled with homogeneous fluid. Otherwise measuring errors may occur. Suitable fluids are clean liquids, pastes, light slurries or gases. Condensing vapors, aerated liquids or slush are not recommended.

The corrosion and erosion resistance of the fluid-wetted materials must be evaluated to secure long lifetime of the sensor. The pressure drop through the sensor is a function of the properties of the fluid and the flow rate. The Sizing Program (download from https://www.siemens.com) can be used to calculate the pressure drop and the accuracy over the full flowrange in use for the application.

Sizing

Liquids: The correct sensor size is determent by the allowable pressure drop at the maximum flowrate the meter is used with. After selecting the sensor size the accuracy throughout the flowrate range for the application can be checked by using the Sizing Program.

Gases: The correct size is very often determent by the calculation of the Mach number at maximum flowrate for the application. After that the accuracy throughout the flowrange should be checked.

The preferred flow direction is indicated by the arrow on the flowmeter. Flow in this direction will be indicated as positive.

Note: For some sensor types, specific installation requirement has be taken into account. Please also see under the specific sensor type chapter.

Generel installation orientation

- FCS300 and FCS400 – sensors.
  The optimal installation orientation is vertical with flow upwards (liquids). This ensures that suspended solids or bubbles are completely pushed through the sensor. A drain valve below the sensor will allow the pipe and sensor to drain . To secure selfdraining a up to 10° off vertical installation could be required.
- MASS 2100/FC300 DN4 – sensors.
  The optimal installation orientation is horizontal.

Supports

- In order to support the weight of the flowmeter and to ensure reliable measurements when external effects exist (e.g. vibrations), the sensor should be installed in well-supported pipelines. Supports or hangers should be installed symmetrically and stress-free in close proximity to the process connections.

Shut-off devices

- To conduct a system zero adjustment, shut-off devices are ideally required in the pipeline before and after the sensor:
- A bypass valve is recommended where regular zero adjustment is planned to avoid disruption of the flowing system.

Installation: straight run requirements

- The mass flowmeter does not require any flow condition or straight inlet sections. Care should be exercised to ensure that any valves, gates, sight glasses etc. do not cavitate and are not set into vibration by the flowmeter.

System design information

- The presence of gas bubbles in the fluid may result in erroneous measurements, particularly in the density measurement. Therefore, the flowmeter should not be installed at the highest point in the system where bubbles are possibly largest.
- Long drop lines downstream from the flowmeter should be avoided to prevent the meter tube from draining during operation.
- The flowmeter should not come into contact with any other objects. Avoid attachments to the housing.
- When the cross-section of the connecting pipeline is larger than the sensor size, suitable standard reducers may be installed.
- If strong vibrations exist in the pipeline, they should be damped using elastic pipeline elements. The damping devices must be installed outside the supported flowmeter section and outside the section between the shut-off devices.
- Make sure that any dissolved gases, which are present in many liquids, do not outgas. The back pressure at the outlet should be at least 0.2 bar (3 psi).
- Assure that operation below the vapor pressure cannot occur when a vacuum exists in the meter tube or for fluids which boil readily.
- The sensor should not be installed in the vicinity of strong electromagnetic fields, e.g. near motors, pumps, transformers etc.
- When operating more than one meter in one or multiple interconnected pipelines, the sensors should be spaced distant from each other or the pipelines should be decoupled to prevent cross talk.

Zero adjustment

- In order to adjust the zero under operating conditions it must be possible to reduce the flow rate to „ZERO“ while the meter tube is completely filled. It is important for accurate measurements that during the zero adjustment there are no gas bubbles in the flowmeter. It is also important that the pressure and temperature in the meter tube be the same as that which exists during operation.

© Siemens 2021

3

Technical specifications

Flowmeter uncertainty/specifications

To ensure continuous accurate measurement, flowmeters must be calibrated.

The Siemens flowmeter calibration process is ISO 9001-certified, ensuring the entire calibration procedure is controlled to the highest quality standards. All primary measuring instrumentation used by the Flow Laboratory during the performance of its calibrations, has been calibrated with international standards traceability referring directly to the physical unit of measurement according to the International System of Units (SI). Therefore the calibration certificate ensures recognition of the test results worldwide, including the US (NIST traceability).

A calibration certificate is shipped with every sensor and calibration data are stored in the SD Memory card . The sensors has the calibration data written to the frontend section DSL.
A backup of all calibrations and PDF copies of all certificates are stored in the SensorFlash.

Sensor flow capacity

FCS300 sensors for liquids:

	Q_{min} at 1 % accuracy water		Q_{nom} [1]		100 % (Q_{max}) [2]	
	kg/h	(lb/min)	kg/h	(lb/min)	kg/h	(lb/min)
DN 15 (½")	70	(2.57)	4 500	(165)	8 000	(294)
DN 25 (1")	240	(8.92)	20 500	(753)	35 000	(1 286)
DN 50 (2")	800	(29.4)	49 000	(1 800)	90 000	(3 307)
DN 80 (3")	2 000	(73.5)	122 000	(4 483)	250 000	(9 186)
DN 100 (4")	4 000	(147)	273 000	(10 031)	520 000	(19 108)
DN 150 (6")	6 900	(253)	459 200	(16 873)	860 000	(31 600)

FCS400 sensors for liquids:

	Q_{min} at 1 % accuracy water [3]		Q_{nom} [1]		100 % (Q_{max}) [2]	
	kg/h	(lb/min)	kg/h	(lb/min)	kg/h	(lb/min)
DN 15 (½")	20	(0.73)	3 700	(135)	6 400	(234)
DN 25 (1")	200	(7.32)	11 500	(421)	17 700	(648)
DN 50 (2")	750	(27.4)	50 000	(1 831)	70 700	(2 590)

MASS 2100 and FC300 sensors for liquids:

	Q_{min} at 1 % accuracy water		Q_{nom} [1]		100 % (Q_{max}) [2]	
	kg/h	(lb/h)	kg/h	(lb/h)	kg/h	(lb/h)
DI 1.5 (1/16")	0.1	(0.22)	19	(42)	30	(66)
DI 3 (1/8")	1.0	(2.2)	90	(198)	250	(550)
DN 4 (1/6")	1	(2.2)	140	(308)	350	(770)
DI 6 (¼")	5	(11)	500	(1 102)	1 000	(2 200)
DI 15 (½")	20	(44)	3 800	(8 370)	5 600	(12 345)

[1] Q_{nom} = Δ 1 barg @ water 20 °C.
[2] Q_{max} = 10 m/sec @ water 20 °C at inlet (up to 25 m/s in the flowtubes).
[3] For 0.1% sensor.

For gas applications the massflow rate is depending on the gas type. The max. flowrate is calculated with the Mach-Number to be Ma = 0.3.

- For flow > 5% of the sensors max. flow rate, the error can be read directly from the curve below.
- For flow < 5 % of the sensors max. flow rate, use the formula to calculate the error.

The error curve is plotted from the formula:

$$E = \pm\sqrt{(Cal.)^2 + \left(\frac{z \times 100}{qm}\right)^2}$$

E Error
Z Zero point error [kg/h] [1]
qm Mass flow [kg/h]
Cal. Calibrated flow accuracy: 0.10, 0.15 or 0.20

[1] Zero point error for each sensor is shown in the tables below.

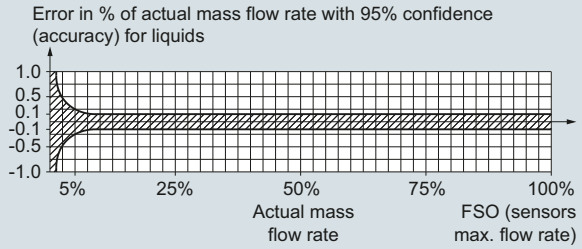

For gas applications: typical additional 0.4 % + zero point

Reference conditions for flow calibration	
Flow conditions	Fully developed flow profile
Temperature, medium	25 °C (77 °F) ± 5 K
Temperature, ambient	25 °C (77 °F) +10/-5 K
Liquid pressure	2 ± 1 bar
Density	0.997 g/cm^3
Brix	40 °Brix
Supply voltage	U_n ±1 %
Warming-up time	30 min.
Cable length	5 m between transmitter and sensor

Additions in the event of deviations from reference conditions	
Current output	As pulse output ± (0.1 % of actual flow +0.05 % FSO)
Effect of ambient temperature	• Display/frequency/pulse output: < ± 0.003 % / K act. • Current output: < ± 0.005 % / K act.
Effect of supply voltage	< 0.005 % of measuring value on 1 % alteration

© Siemens 2021

Technical specifications (continued)

Sensor type		FC300	MASS 2100			
Sensor size		**DN 4 (1/6")**	**DI 1.5 (1/16")**	**DI 3 (1/8")**	**DI 6 (¼")**	**DI 15 (½")**
Number of measuring pipes		1	1	1	1	1
Mass flow (liquids)						
Linearity error[1)]	% of rate	0.10	0.10	0.10	0.10	0.10
Repeatability of flow-rate at rates > 5 % of Q_{max}	% of rate	0.05	0.05	0.05	0.05	0.05
Max. zero point error	[kg/h]	0.010	0.001	0.010	0.050	0.200
Density (liquids)						
Density error standard	[g/cm³]	n.a.	0.008	0.008	0.008	0.008
Density error extended	[g/cm³]	0.007[2)]	0.001	0.0015	0.0015	0.0005
Repeatability error	[g/cm³]	0.0002	0.0002	0.0002	0.0002	0.0001
Range	[g/cm³]	0.3 … 2.9	0.3 … 2.9	0.3 … 2.9	0.3 … 2.9	0.3 … 2.9
Temperature						
Error	[°K]	0.5	0.5	0.5	0.5	0.5

1) Increased error can be expected for gas mass flow measurement (for gas measurement typically additional +0.40 % error).

2) For Hastelloy tubes: 0.0025 g/cm³.

Sensor type		FCS300					
Sensor size		**DN 15 (½")**	**DN 25 (1")**	**DN 50 (2")**	**DN 80 (3")**	**DN 100 (4")**	**DN 150 (6")**
Number of measuring pipes		2	2	2	2	2	2
Mass flow (liquids)							
Linearity error[1)]	0.1% sensor % of rate	0.1	0.1	0.1	0.1	0.1	0.1
	0.2% sensor % of rate	0.2	0.2	0.2	0.2	0.2	0.2
Repeatability of flow-rate at rates > 5 % of Q_{max}	% of rate	0.05	0.05	0.05	0.05	0.1	0.1
Max. zero point error	[kg/h]	0.6	2.16	7.2	20.0	41.6	68.8
Density (liquids)							
Density error	0.1% massflow sensor [g/cm³]	0.002	0.002	0.002	0.002	0.002	0.002
	0.2% massflow sensor [g/cm³]	0.010	0.010	0.010	0.010	0.010	0.010
Range	[kg/dm³]	0.001 ... 5.0	0.001 ... 5.0	0.001 ... 5.0	0.001 ... 5.0	0.001 ... 5.0	0.001 ... 5.0
Repeatability error	[kg/m³]	± 0.25	± 0.25	± 0.25	± 0.25	± 0.25	± 0.25
Temperature							
Error	[°K]	0.5	0.5	0.5	0.5	0.5	0.5

1) Increased error can be expected for gas mass flow measurement (for gas measurement typically additional +0.4 % error).

Sensor type		FCS400		
Sensor size		**DN 15 (½")**	**DN 25 (1")**	**DN 50 (2")**
Number of measuring pipes		2	2	2
Mass flow (liquids)				
Linearity error[1)]	% of rate	0.1	0.1	0.1
Repeatability of flow-rate at rates > 5 % of Q_{max}	% of rate	0.05	0.05	0.05
Max. zero point error	[kg/h]	0.2	2.0	7.5
Density (liquids)				
Density error	(Standard) [g/cm³]	0.005	0.005	0.005
	(Extended) [g/cm³]	0.0005	0.0005	0.0005
Range	[kg/dm³]	0.001 ... 5.0	0.001 ... 5.0	0.001 ... 5.0
Repeatability error	[kg/m³]	± 0.25	± 0.25	± 0.25
Temperature				
Error	[°K]	0.5	0.5	0.5

1) Increased error can be expected for gas mass flow measurement (for gas measurement typically additional up to +0.4 % error).

© Siemens 2021

Technical specifications (continued)

PROFIBUS PA/DP for FCT030

General specifications	
PROFIBUS device profile	Profile V 4.0 and compatible to V 3.x

Electrical specification DP

Physical layer specifications	
Applicable standard	IEC 61158/EN 50170
Physical Layer (transmission technology)	RS 485
Transmission speed	≤ 12 Mbits/s
Number of stations	Up to 32 per line segment (maximum total of 126)
Cable specification (Type A)	
Cable design	Two wire twisted pair
Shielding	CU shielding braid or shielding braid and shielding foil
Impedance	35 up to 165 Ω at frequencies from 3 … 20 MHz
Cable capacity	< 30 pF per meter
Core diameter	> 0.34 mm^2, corresponds to AWG 22
Resistance	< 110 Ω per km
Signal attenuation	Max. 9 dB over total length of line section
Max. bus length	100 m at 12 Mbit/s, up to 1.2 km at 93.75 kbit/s. Extendable by repeaters

Electrical specification PA

Physical layer specifications	
Applicable standard	IEC 61158/EN 50170
Physical Layer (transmission technology)	IEC 61158-2
Transmission speed	31.25 Kbits/s
Number of stations	Up to 32 per line segment (maximum total of 126)
Max. basic current [I_B]	14 mA
Fault current [I_{FDE}]	0 mA
Bus voltage	9 … 32 V (non Ex)
Preferred cable specification (Type A)	
Cable design	Two wire twisted pair
Conductor area (nominal)	0.8 mm^2 (AWG 18)
Loop resistance	44 Ω/km
Impedance	100 Ω ± 20 %
Wave attenuation at 39 kHz	3 dB/km
Capacitive asymmetry	2 nF/km
Bus termination	Passive line terminated on both ends
Max. bus length	Up to 1.9 km. Extendable by repeaters

IS (Intrinsic Safety) data	
Required sensor electronics	Compact mounted SITRANS FCT030
FISCO	Yes
Max. U_I	17.5 V
Max. I_I	380 mA
Max. P_I	5.32 V
Max. L_I	10 µH
Max. C_I	5 nF
Max. U_O	1.3 V
Max. I_O	50 µA
FISCO cable requirements	
Loop resistance R_C	15 … 150 Ω/km
Loop inductance L_C	0.4 … 1 mH/km
Capacitance C_C	80 … 200 nF/km
Max. Spur length in IIC and IIB	30 m
Max. Trunk length in IIC	1 km
Max. Trunk length in IIB	5 km

PROFIBUS parameter support

The following parameters are accessible using a Class 1 Master.

Cyclic services		
Input (Master view)	**Parameter**	**FCT030**
	Mass flow	✓
	Volume flow	✓
	Media temperature	✓
	Frame temperature	✓
	Standard volume flow	✓
	Density	✓
	Fraction A[1)]	✓
	Fraction B[1)]	✓
	Pct Fraction A[1)]	✓
	Pct Fraction B[1)]	✓
	Totalizer 1	✓
	Totalizer 2	✓
	Totalizer 3	✓
	Digital dosing control	✓
	Analog dosing control	✓
	Dosing status	✓
Output (Master view)	Control totalizer 1+2+3	✓
	Control commands as zero point adjustment	✓

1) Requires a flowmeter ordered with fraction option.

© Siemens 2021

Overview



FCT030 is based on the latest developments within digital signal processing technology – engineered for high measuring performance, fast response to step changes in flow, fast dosing applications, high immunity against process noise, easy to install commission and maintain.

The FCT030 transmitter delivers true multi-parameter measurements i.e. massflow, volumeflow, standard volumeflow, density, temperature and fraction.

The FCT030 IP67 transmitter can be remote connected or compact mounted with all sensors of type FCS300 sizes DN 15 to DN 150, FCS400 sizes DN 15 to DN 50, MASS 2100 DI 1.5, DI 3, DI 6, DI 15 and FC300 DN 4.

Fraction

The transmitter FCT030 can be set up at works to measure and report various fraction concentrations of two-part mixtures or solutions. Where a discrete relationship exists between concentration and density at particular temperatures a calculation is performed and the percentage concentration by volume or mass of Part A or Part B (100 % minus Part A) is measured. For solutions and some mixtures the total mass, or dry weight, is also available.

In some industries, a selection of standard density scales has been adopted to represent the density or relative density of the process fluid.

If "Standard fractions" option is chosen at ordering, the following fraction or standard density scales can be selected in the setup menu:

- API number
- Balling
- °Baumé light
- °Baumé heavy
- °Brix
- °Oeschlé
- Plato
- Specific Gravity
- Twaddell
- %HFCS42
- %HFCS55
- %HFCS90
- Ethanol-Water (ABM)[1] 0 % to 20 %
- Ethanol-Water (ABM)[1] 15 % to 35 %
- Ethanol-Water (ABM)[1] 30 % to 55 %
- Ethanol-Water (ABM)[1] 50 % to 100 %

[1] ABM: Alcohol by Mass
ABV: Alohol by volume on request

Benefits

Flow calculation and measurement

- Dedicated mass flow calculation with DSP technology
- Fast dosing and flow step response with maximum 10 ms response time
- 100 Hz update rate to all outputs
- Maximum data age from pickup to output is 20 ms (two update cycles)
- Independent low flow cut-off settings for mass and volume flowrates
- Automatic zero-point adjustment on command from discrete input or host system
- Empty pipe monitoring

Operation and display

- User-configurable operation display
  - Full graphical display 240 × 160 pixels with up to 6 programmable views
  - Self-explaining alarm handling/log in clear text
  - Help text for all parameters appears automatically in the configuration menu
  - Keypad can be used for controlling dosing as start/stop/hold/reset
- SensorFlash technology stores production specific system documentation and provides removable memory of all flowmeter setups and functions
  - Calibration certificates
  - Pressure and material test certificates (as ordered)
  - Non-volatile memory backup of operational data
  - Transfer of user configuration to other flowmeters
  - Alarm history log
  - Parameter change log
  - Logging of min and max process values
  - Data logging of process values and parameter (including diagnostic parameters)

Alarms and safety

- Advanced diagnosis and service menu enhances trouble-shooting and meter validation
- Configurable upper and lower alarm and warning limits for all process values
- Alarm handling can be selected between Siemens and NAMUR standard configurations

Outputs and control

- Built-in dosing controller with compensation and monitoring comprising 3 built-in totalizers
- Multi-parameter outputs, individually configurable for massflow, volumeflow, standard volumeflow, density, temperature or fraction flow such as °Brix or °Plato

Up to four I/O channels are configured as follows:

Channel 1

Channel 1 is 4 to 20 mA analog output with HART 7.5, PROFIBUS PA, PROFIBUS DP or Modbus RS 485 RTU. The current signal can be configured for massflow, volumeflow or density, standard volume flow, medium temperature, Fraction A and B and Fraction A% and B%.

Channel 2

Channel 2 is a signal output which can be freely configured for any process variable.

© Siemens 2021

Benefits (continued)

- Analog current (0/4 to 20 mA)
- 3 stage analog valve dosing control
- Frequency or pulse
- Digital one or two-valve dosing control in combination with channel 3 or 4
- Operational and alarm status

Channels 3 and 4

Channels 3 and 4 can be ordered with signal (freely configured for any process variable) or relay outputs, or signal input.

Signal

Signal output can be user configured to:

- Analog current (0/4 to 20 mA)
- 3 stage analog valve dosing control
- Frequency or pulse
- Redundant frequency or pulse (linked to Channel 2)
- Digital one or two-valve dosing control
- Operational and alarm status

Relay

Relay output(s) can be user configured to:

- Digital one or two-valve dosing control
- Operation status including flow direction
- Alarm status

Signal input

Signal input can be user configured for

- Dosing control
- Totalizer reset functions
- Force or freeze output(s)
- Inititate automatic zero point adjustment

Signal outputs and inputs for non hazardous areas can be changed for active or passive operations by dip switch.

For hazardous areas Signal outputs and inputs can't be changed by dip switch, and has to selected individually by ordering.

During service and maintenance all outputs can be forced to a preset value for simulation, verification or calibration purposes.

Approvals and certificates

The FCT030 coriolis flowmeter program was designed from the ground up to comply with or exceed the requirements of international standards and regulations.

Application

SITRANS FCT030 transmitters are suitable for applications within the entire process industry where there is a demand for accurate flow measurement. The meter is capable of measuring both liquid and gas flow.

Coriolis flowmeters can be applied in all industries, such as:

- Chemical & Pharma: detergents, bulk chemicals, acids, alkalis, paint mixing systems, solvents and resins, pharmaceuticals, blood products, vaccines, insulin production
- Food & Beverage: dairy products, beer, wine, soft drinks, °Brix/°Plato, fruit juices and pulps, bottling, CO2 dosing, CIP/SIP-liquids, mixture recipe control
- Automotive: fuel injection nozzle & pump testing, filling of AC units, engine consumption
- Oil & Gas: filling of gas bottles, furnace control, test separators
- Hydrocarbon processing: oil refining, derivatives manufacturing, polymerisation
- Water & Waste Water: dosing of chemicals for water treatment

The multiple outputs and bus communication mean that all of the process information can be read either instantaneously (10 ms update) or periodically as plant operation requires.

Design

The transmitter SITRANS FCT030 is designed in an IP67/NEMA 4X aluminum enclosure with corrosion resistant coating. It can be remote connected or compact mounted with the following sensors:

- FCS300 DN 15, DN 25, DN 50, DN 80, DN 100, DN 150
- FCS400 DN 15, DN 25 and DN 50
- MASS 2100 DI 1.5, DI 3, DI 6, DI 15
- FC300 DN 4

FCT030 is available with current output HART 7.5, Modbus RS 485 RTU, PROFIBUS DP or PROFIBUS PA as standard on Channel 1.

The transmitter has a modular design with discrete, replaceable electronic modules and connection boards to maintain separation between functions and facilitate field service. All modules are fully traceable and their provenance is included in the transmitter setup.

SensorFlash

SensorFlash is a standard, 4 GByte micro SD card with the ability to be updated by PC. It is supplied with each sensor with the complete set of certification documents including calibration report. Material, pressure test, factory conformance certificates are optional at ordering.

The Siemens SensorFlash memory unit offers the following features and benefits:

- Automatically program any similar transmitter in seconds to the operation standard
- Transmitter replacement in less than 5 minutes
- True "plug & play" provided by integrated cross-checking data consistency and HW/SW version verification
- Permanent memory of operational and functional information from the moment that the flowmeter is switched on
- New firmware updates can be downloaded from the Siemens internet portal for Product Support and placed onto SensorFlash (unmounted from the transmitter and inserted into a PC's SD card slot). The firmware is then inserted into the existing flowmeter and the complete system upgraded.
- Storing of alarm history log
- Storing of parameter change log
- Storing of process peak values log

Dataloggin on SensorFlash

The following functions are available:

- Logging of process values and diagnostic values simultaneous
- Logging of parameter settings
- Selectable logging interval

© Siemens 2021

Function

The following functions are available:

- Mass flowrate, volume flowrate, density, process temperature, frame temperature, fraction flow
- Up to four output/input channels selected at ordering
- Outputs can be individually configured with mass, volume, density etc.
- Three built-in totalizers which can count forward, backward or forward and backward
- Low flow cut-off, adjustable
- Density cut-off or empty pipe cut-off, adjustable
- Flow direction adjustable
- Alarm system consisting of alarm-log, alarm pending menu
- Internal data logger is updated each 10 minutes with operational data such as system health, totalizer values, all configurations and data needed for custody transfer requirements to OIML R 117 and NTEP
- Display of operating time with real-time clock. Daylight saving time is not implemented
- Uni/bidirectional flow measurement
- Flowrate outputs are freely configurable between maximum negative and maximum positive flows according to the sensor capacity
- Limit switches programmable for flow, density, temperature or fraction process values. Limit points can be graded as warning and alarm for values both above and below nominal process conditions
- Process noise filter for optimization of measurement performance under non-ideal application conditions. 5-stage pumping filter compensates for flow fluctuations caused by e.g. single acting piston pumps
- Full dosing controller with 5 user-configurable recipes
- Automatic zero adjustment menu, with zero point evaluation display
- Full service menu for effective and straight forward application and meter troubleshooting
- Precise temperature measurement ensures optimum accuracy on massflow, density and fraction flow.
- Fraction flow computation is based on a 5th-order algorithm matching known applications.
- Audit trail information, stores parameters changes with time stamp information
- Simulation of process values, status information and alarms
- Aerated flow filtering system, for advanced filtering of fluids with gas or air bubbles
- Datalogging of process values and parameter changes on SensorFlash

Technical specifications

Number of process variables	7
Measurement of	• Mass flow • Volume flow • Density • Process media temperature • Standard volume flow • Reference density • Fraction A flow • Fraction B flow • Fraction A % • Fraction B %
Current output	
Current	0 ... 20 mA or 4 ... 20 mA (Channel 1 only 4 ... 20 mA)
Load	Ex i: < 470 Ω (HART ≥ 230 Ω) Non-Ex: < 770 Ω (HART ≥ 230 Ω)
Time constant	0 ... 100 s adjustable
Digital output[1)]	
Pulse	41.6 µs ... 5 s pulse duration
Frequency	0 ... 12.5 kHz, 50 % duty cycle, 120 % overscale provision
Time constant	0 ... 100 s adjustable
Active	0 ... 24 V DC, 87 mA, short-circuit-protected
Passive	3 ... 30 V DC, max. 110 mA
Relay	Only for channel 3 and 4
Type	Change-over voltage-free relay contact
Load	30 V AC/100 mA
Functions	Alarm level, alarm number, limit, flow direction
Digital input[1)]	Only for channel 3 and 4
Voltage	15 ... 30 V DC (2 ... 15 mA)
Functionality	Start/stop/hold/continue dosing, reset totalizer 1 and 2, force output, freeze output
Galvanic isolation	All inputs and outputs are galvanically isolated, isolation voltage 500 V
Cut-off	
Low-flow	0 ... 9.9 % of maximum flow
Limit function	Mass flow, volume flow, fraction, density, sensor temperature
Totalizer	Three eight-digit counters for forward, net or reverse flow
Display	• Background illumination with alphanumerical text, 3 × 20 characters to indicate flow rate, totalized values, settings and faults. • Time constant as current output 1 • Reverse flow indicated by negative sign
Zero point adjustment	Via keypad or remote via digital input

© Siemens 2021

Technical specifications (continued)

Ambient temperature	
Operation	
• Transmitter	-40 ... +60 °C (-40 ... +140 °F) (humidity max. 95 %)
• Display	-20 ... +60 °C (-4 ... +140 °F)
Storage	
• Transmitter	-40 ... +70 °C (-40 ... +158 °F) (humidity max. 95 %)
• Display	-20 ... +70 °C (-4 ... +158 °F)
Communication Ch1	HART 7.5 PROFIBUS PA PROFIBUS DP Modbus RS 485 RTU
Enclosure	
Material	Aluminum, corrosion Class C4
Rating	IP67/NEMA 4X to EN/IEC 60529 (1 mH_2O for 30 min.)
Mechanical load	18 ... 1000 Hz random, 3.17 g RMS, in all directions, to IEC 68-02-36
Supply voltage	
Supply	20 ... 90 V DC ± 10 % 100 ... 240 V AC ± 10 % 47 ... 63 Hz
Fluctuation	No limit
Power consumption	11 W/30 VA
EMC performance	
Emission	EN 55011/CISPR-11 (Class A)
Immunity	EN/IEC 61236-1 (Industry)
NAMUR	Within the value limits according to "General requirements" with error criteria A in accordance with NE 21
Environment	
Environmental conditions acc. to IEC/EN/UL 61010-1	• Altitude up to 2000 m • Pollution degree 2
Maintenance	The flowmeter has a built-in error log/pending menu which should be inspected on a regular basis
Cable glands	Cable glands are available in nylon, nickel plated brass or stainless steel (316L/W1.4404) in the following dimensions: • 1 × M25, 2 × M20 • 3 × ½" NPT
Digital cable connection (remote version)	Standard industrial signal cable up to 75 m long with 2 × screened pairs or 4-wire overall screen can be laid between the sensor and transmitter. Siemens offers cables in a selection of pre-cut lengths and prepared for either gland or plug connection.
Analog cable connection (MASS 2100/FC300)	Standard industrial cable up to 15 m distance between sensor and transmitter. PVC insulated 5 × 2 × Ø 0.34 mm, twisted and screened in pairs, temperature range -20 ... +105 °C Siemens offers cables in a selection of precut lengths.

Approvals FCT030	
Hazardous area (fieldmouint housing only) [2]	• ATEX zone 1, IECEx zone 1, cCSAus (Class 1 Div 1), EAC Ex zone 1, cCSAus Zone 1, NEPSI, INMETRO (depending on version and configuration) - ATEX/IECEx Zone 1: Ex db eb ia [ia Ga] IIC T6 Gb - ATEX/IECEx Zone 21 (depending on sensor type): Ex tb [ia Da] IIIC T85°C Db - Canada: Ex db eb ia [ia Ga] IIC T6 Gb Ex tb [ia Da] IIIC T85°C (depending on sensor type) - USA: Class I, II, III, Division 1, Groups A, B, C, D, E, F, Class I Zone 1: AEx db eb ia [ia Ga] IIC T6 Gb Zone 21: AEx tb [ia Da] IIIC T85°C
Certificates	
CE mark	• Pressure equipment • Low voltage directive • WEEE • RoHS
Regional certifications	• C-TICK (Australia and New Zealand EMC) • EAC (Belarus, Armenia, Kazakhstan, Russia) • KCC (South Korea) (in preparation)

[1] With 300 Ω internal impedance. For coil switching use the passive output option.

[2] Dust certification depending on sensor type.

© Siemens 2021

Dimensional drawings

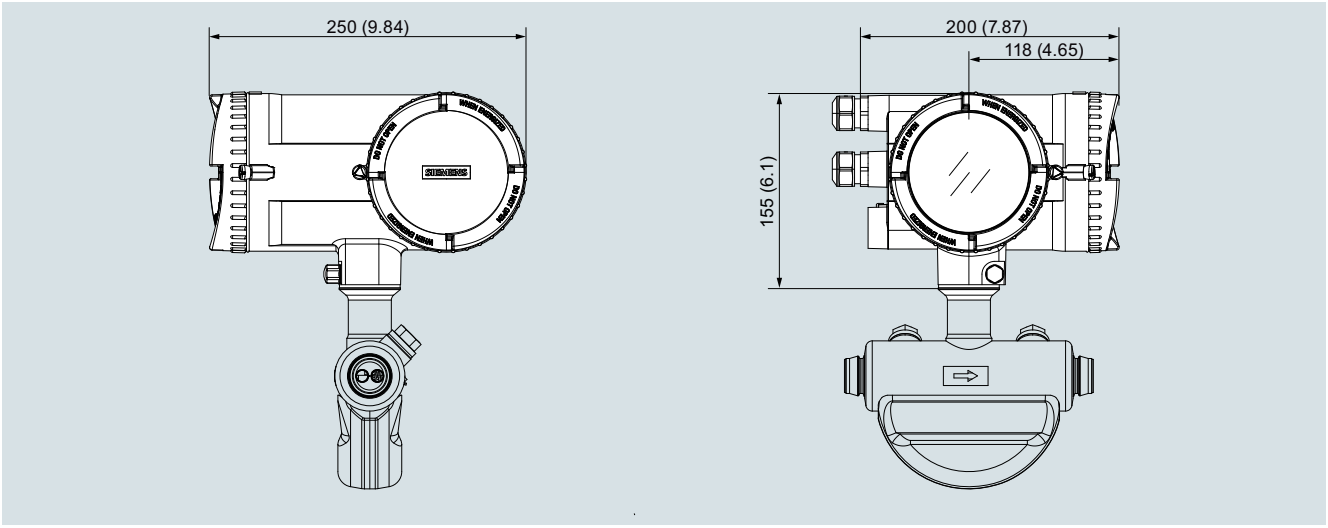

SITRANS FCT030, compact version, dimensions in mm (inch)

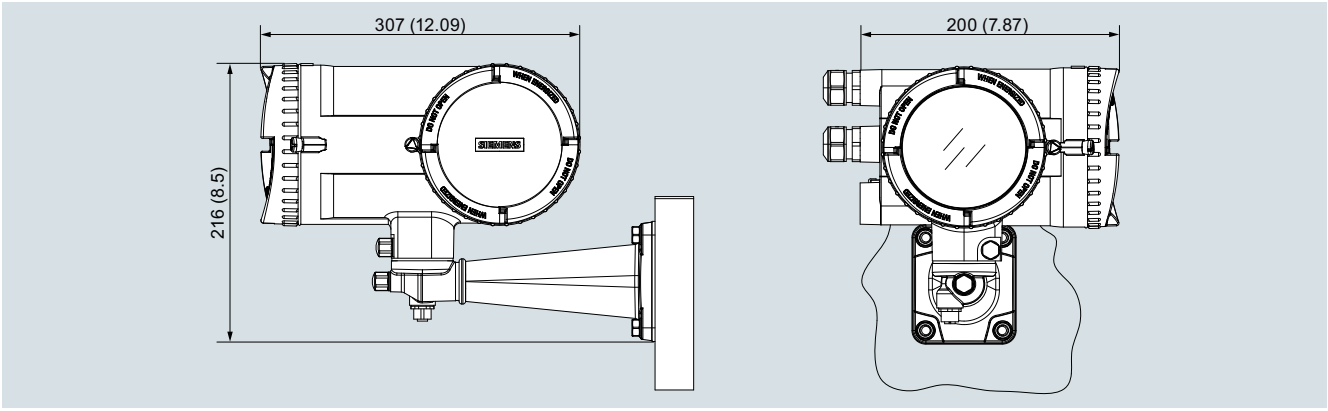

SITRANS FCT030, field mount version for sensors with digital cable and M12 plug connection, dimensions in mm (inch)

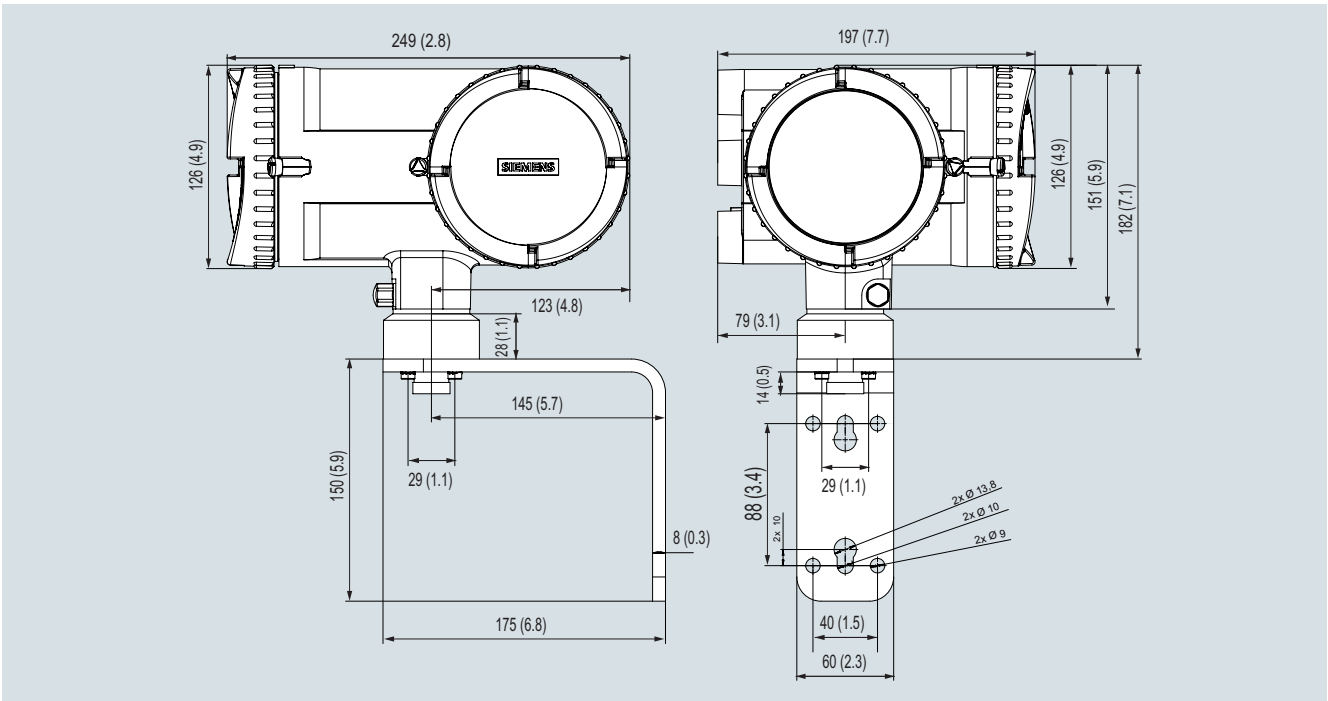

SITRANS FCT030, field mount version for low flow MASS 2100 / FC300 sensors with analog cable dimensions in mm (inch)

© Siemens 2021

Dimensional drawings (continued)

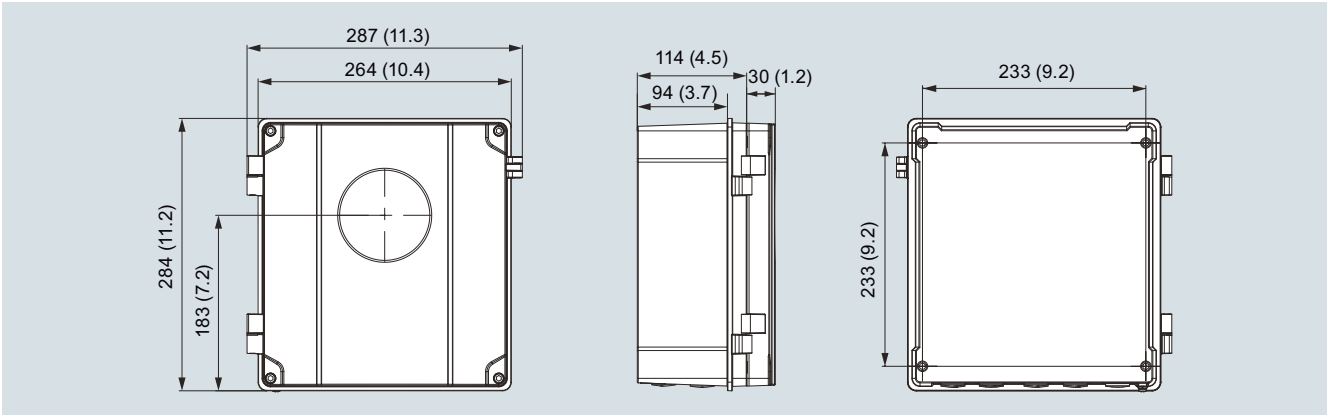

SITRANS FCT030, wall mount version, dimensions in mm (inch)

© Siemens 2021

Overview



FCT010 is based on the latest developments within digital signal processing technology – engineered for high measuring performance, fast response to step changes in flow, fast dosing applications, high immunity against process noise, easy to install commission and maintain.

The FCT010 transmitter delivers true multi-parameter measurements i.e. massflow, volumeflow, standard volumeflow, density, temperature . All with a single Modbus connection.

The FCT010 IP67 transmitter is compact mounted with all sensors of type FCS300, FCS400 , MASS 2100 DI 3, DI 6, DI 15.

For MASS 2100 DI 1.5 to DI 15 and FC300 DN 4 an analogue connection is available for a remote FCT010 solution.

Benefits

Flow calculation and measurement

Dedicated mass flow calculation with DSP technology

- Fast dosing and flow step response with maximum 10 ms response time
- 100 Hz update rate to all outputs
- Independent low flow cut-off settings for mass and volume flowrates
- Automatic zero-point adjustment on command from discrete input or host system

Operation

- User-configurable settings over SIMATIC PDM

Alarms and safety

- Advanced diagnosis and service menu enhances trouble-shooting and meter validation
- Configurable upper and lower alarm and warning limits for all process values
- Alarm handling can be selected between Siemens and NAMUR standard configurations

Outputs and control

- Single channel Modbus RTU output
- Individually configurable for massflow, volumeflow, standard volumeflow, density, temperature
- One Totalizer (data not secured by power failure)

Approvals and certificates

The FCT010 coriolis flowmeter program was designed from the ground up to comply with or exceed the requirements of international standards and regulations.

Application

SITRANS FCT010 transmitters are suitable for applications within the entire process industry where there is a demand for accurate flow measurement. The meter is capable of measuring both liquid and gas flow.

Coriolis flowmeters can be applied in all industries, such as:

- Chemical & Pharma: detergents, bulk chemicals, acids, alkalis, paint mixing systems, solvents and resins, pharmaceuticals, blood products, vaccines, insulin production
- Food & Beverage: dairy products, beer, wine, soft drinks, CO2 dosing, CIP/SIP-liquids, mixture recipe control
- Automotive: fuel injection nozzle & pump testing, filling of AC units, engine consumption
- Oil & Gas applications e.g. test separators
- Hydrocarbon processing: oil refining, derivatives manufacturing, polymerisation
- Water & Waste Water: dosing of chemicals for water treatment

The Modbus communication mean that all of the process information can be read either instantaneously (10 ms update) or periodically as plant operation requires.

Design

The transmitter SITRANS FCT010 is designed in an IP67/NEMA 4X aluminum enclosure with corrosion resistant coating.

It is compact mounted with the following sensors:

- FCS300 DN 15, DN 25, DN 50, DN 80, DN 100, DN 150
- FCS400 DN 15, DN 25 and DN 50
- MASS 2100 DI 3, DI 6, DI 15

It can be remote mounted with the following sensors:

- MASS 2100 DI 1.5, DI 3, DI 6, DI 15
- FC300 DN 4

FCT010 is available with Modbus RS 485 RTU as standard.

SensorFlash

SensorFlash is a standard, 4 GByte micro SD card with the ability to be updated by PC. It is supplied with each sensor with the complete set of certification documents including calibration report. Material, pressure test, factory conformance certificates are optional at ordering.

The Siemens SensorFlash memory unit for the FCT010 only has the function of documentation including a parameter backup and a FW bundle. The Sensor Flash is not mounted into the FCT010 and will not have the extra features as the FCT030 transmitter has.

- Storing of alarm history log
- Storing of parameter change log

© Siemens 2021

SITRANS FCT010

Function

The following functions are available:

- Mass flowrate, volume flowrate, density, process temperature
- Single Modbus RTU I/O
- Low flow cut-off, adjustable
- Density cut-off or empty pipe cut-off, adjustable
- Flow direction adjustable
- Alarm system consisting of alarm-log, alarm pending menu
- Uni/bidirectional flow measurement
- Flowrate outputs are freely configurable between maximum negative and maximum positive flows according to the sensor capacity
- Process noise filter for optimization of measurement performance under non-ideal application conditions. 5-stage pumping filter compensates for flow fluctuations caused by e.g. single acting piston pumps
- Full service menu for effective and straight forward application and meter troubleshooting
- Aerated flow filtering system, for advanced filtering of fluids with gas or air bubbles

Technical specifications

Number of process variables	5
Measurement of	• Mass flow • Volume flow • Density • Process media temperature • Standard volume flow
I/O	Modbus RTU
Galvanic isolation	All inputs and outputs are galvanically isolated, isolation voltage 500 V
Cut-off	
Low-flow	0 ... 9.9 % of maximum flow
Limit function	Mass flow, volume flow, density, sensor temperature
Totalizer	One eight-digit counters for forward, or reverse flow - data recovery not protected at power loss.
Zero point adjustment	Via Simatic PDM
Ambient temperature	
Operation	
• Transmitter	-40 ... +60 °C (-40 ... +140 °F) (humidity max. 95 %)
Storage	
• Transmitter	-40 ... +70 °C (-40 ... +158 °F) (humidity max. 95 %)
Communication Ch1	Modbus RS 485 RTU
Enclosure	
Material	Aluminum corrosion Class C4
Rating	IP67/NEMA 4X to EN/IEC 60529 (1 mH2O for 30 min.)
Mechanical load	18 ... 1000 Hz random, 3.17 g RMS, in all directions, to IEC 68-02-36
Supply voltage	
Supply	12 ... 27 V DC Ex d: 12-24 V DC Intrisic safe: Ui: 20 V, Ii: 484 mA, Pi: 2.3 W, Li: 0.6 uH, Ci: 1.9 nF
Fluctuation	No limit
Power consumption	1.1 W
EMC performance	
Emission	EN 55011/CISPR-11 (Class A)
Immunity	EN/IEC 61236-1 (Industry)
NAMUR	Within the value limits according to "General requirements" with error criteria A in accordance with NE 21
Environment	
Environmental conditions acc. to IEC/EN/UL 61010-1	• Altitude up to 2000 m • Pollution degree 2
Maintenance	The flowmeter has a built-in error log/pending menu which should be inspected on a regular basis.
Cable glands	M12 connector Cable glands are available in nylon, nickel plated brass or stainless steel (316L/W1.4404) in the following dimensions: • 1 × M20 • 1 × ½" NPT
Digital cable connection	Standard industrial signal cable up to 75 m long with 2 × screened pairs or 4-wire overall screen can be laid between the sensor and transmitter. Siemens offers cables in a selection of pre-cut lengths and prepared for either gland or plug connection.
Analog cable connection (MASS 2100/FC300)	Standard industrial cable up to 15 m distance between sensor and transmitter. PVC insulated 5 × 2 × Ø 0.34 mm, twisted and screened in pairs, temperature range -20 ... +105 °C
Approvals	
Hazardous area	FCT010 can be installed in zone 1 for gas and zone 21 for dust (dust: depending on sensor type) and Class 1 Div 1/ Zone 1 • ATEX, IECEx, cCSAus (Class 1 Div 1), EAC Ex, cCSAus Zone 1, NEPSI Zone 1
Certificates	
CE mark	• Pressure equipment • Low voltage directive • WEEE • RoHS
Regional certifications	• C-TICK (Australia and New Zealand EMC) • EAC (Belarus, Armenia, Kazakhstan, Russia) • KCC (South Korea) (in preparation)

© Siemens 2021

Dimensional drawings

Dimension for the FCT010 remote mounted (for analogue cable connections for MASS 2100 / FC300 DN4)

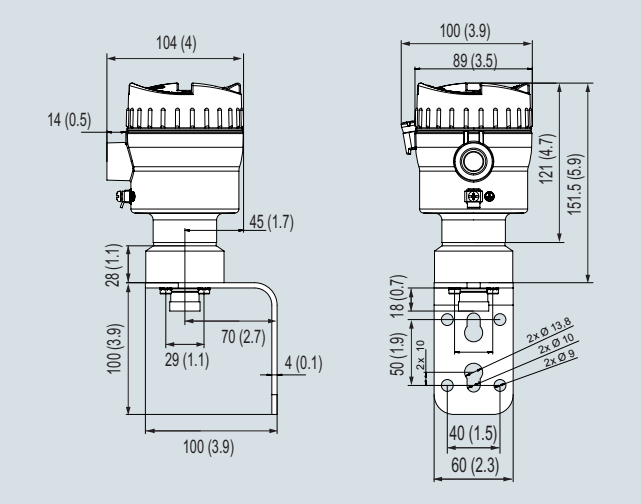

SITRANS FCT010, dimensions in mm (inch)

© Siemens 2021

SITRANS FCT070

Overview



SITRANS FCT070 transmitter

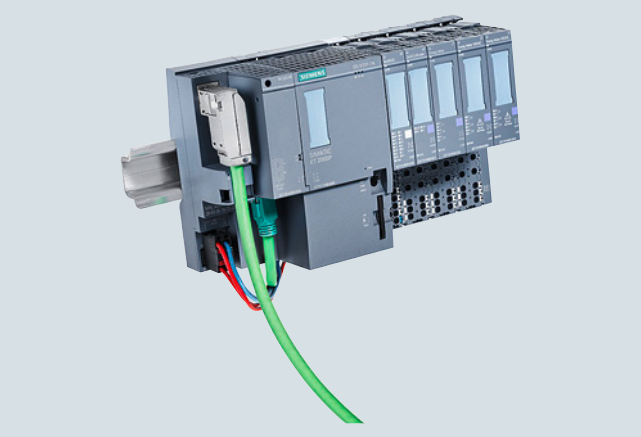

Mounting on the SIMATIC ET 200SP ST & HF

The technology module SITRANS FCT070 is a Coriolis flow meter transmitter for the SIMATIC ET 200SP ST & HF.

The TM SITRANS FCT070 flow transmitter can be operated directly in the SIMATIC PCS7 or in TIA Portal with the FCT070 Faceplates.

TM FCT070 offers real-time data processing and the display of all measuring and status data of the Coriolis flowmeter.

The TM FCT070 can work with all Siemens Coriolis flow meters. It can be directly connected to the SITRANS FCS300, SITRANS FCS400 and SITRANS FC MASS 2100 and FC300 DN 4.

Benefits

- Easy integration into automation process control as TIA portal and PCS7
- Easy selection and integration of flow meters via TIA-Selector
- No transmitter between automation and flow meter required
- Cost effective integration of Coriolis flow meters for PLC controlled machines
- SITRANS FCT070 is a ET 200SP technology module and can combined with all other SIMATIC ET 200S SP ST & HF modules
- Fast and trouble-free communication between the flow meter and the PLC through digital data communication with up to 10 ms update rate
- SITRANS FCT070 and ET 200SP have the ATEX Zone 2 Class 1 Div 2 approvals. With the barrier SITRANS I300 the flowmeters sensor can be used in Ex Zone 1 & Class 1 Div 1 approval.
- Included advanced batch functionality without additional modules. I/Os are onboard
- Included the 17 standard fraction tables.

Application

SITRANS FCT070 can be used for machine builders and in the process industry plants. The meters are suitable for measuring on liquid and gas. With ET 200SP ST & HF the SITRANS FCT070 can be installed decentralized in small stations, with fast communication to the control room.

The faceplates for TIA-Portal and PCS 7 offer the direct full remote access to the flow meter.

The main industries for the SITRANS FCT070 transmitter:

- Chemical
- Food and beverage
- Pharmaceutical
- Automotive
- Oil and gas
- Power generation and utility
- Water and waste water

Design

The SITRANS FCT070 is designed as ET 200SP ST & HF module and can directly installed with other ET 200SP modules.

The sensor DSL cable is directly mounted to the ET 200SP ST & HF base unit is providing the supply voltage and the data communication. The SITRANS FC sensors with DSL can be connected directly to the SITRANS FCT070.

For sensors in ATEX Zone 1, the SITRANS I300 barrier must be installed between FCT070 and the FC DSL.

Function

The following key functionalities are available:

- Mass flow rate, volume flow rate, density, temperature and fraction flow
- Three built-in totalizers which can freely be set for counting mass flow, volume flow, standard volume flow and fraction
- Two-stage batch controller
- Two digital inputs
- Two digital outputs
- Low flow cut-off
- Zero point adjustment
- Configurable upper and lower alarm and warning limits for all process values
- Comprehensive status and error reporting

© Siemens 2021

Technical specifications

Measurement of	Mass flow, volume flow, density, temperature, fraction A flow, fraction A %, fraction B flow, fraction B %
Measurement functions	
• Totalizer 1	**Mass flow**, volume flow, standard volume flow, fraction A, fraction B
• Totalizer 2	Mass flow, **volume flow**, standard volume flow, fraction A, fraction B
• Totalizer 3	Mass flow, volume flow, **standard volume flow**, fraction A, fraction B
• Single and 2-stage batch function	Batching function with the use of one or two outputs for dosing at high and low speed
General information	
Product type designation	Technology module TM FCT070
FW update possible	Yes
Usable BaseUnits	BU 20 type B1
ET 200SP	Yes; from FW V4.2 or higher.
ET 200SP ST & HF	Compatible and tested ST: Standard HF: High Feature
Engineering with	• STEP 7 TIA Portal configurable/integrated as of version V16 or higher • STEP 7 configurable/integrated as of version V5.5 SP4 and higher • PCS 7 V9.0 or higher • PROFINET as of GSD version/GSD revision GSDML V2.34
Cable	
Maximum cable length to FC DSL	75 m (150 m)
Supply voltage	
Load voltage L+	24 V DC
Rated value (DC)	24 V NEC-Class II
Permissible range, lower limit (DC)	19.2 V
Permissible range, upper limit (DC)	28.8 V
Short-circuit protection	Yes
Reverse polarity protection	Yes; against destruction
Input current	
Current consumption, max.	500 mA
Power loss	
Typical power loss, max.	1.7 W
Protection class	
IP protection	IP20
EMV	• Electrostatic discharge according to IEC 61000-4-2: 2008 • Field-related interference according to IEC 61000-4-3: 2006 • Bursted interference due to Burst according to IEC 61000-4-4: 2012 • Conducted interference by surge according to IEC 61000-4-5: 2014 • Conducted interference by high-frequency radiation according to IEC 61000-4-6: 2013

Decentralized operation	
• to SIMATIC S7-300	Yes
• to SIMATIC S7-400	Yes
• to SIMATIC S7-1200	Yes
• to SIMATIC S7-1500	Yes
• to standard PROFINET controller	Yes
Usable with the following flowmeters	• SITRANS FCS400 • SITRANS FCS300 • SITRANS FC MASS2100 • SITRANS FC300 For hazardous area application the SITRANS I300 can be used as barrier/power supply between sensor and FCT070
Digital inputs 1 and 2	
Free usable inputs 1 and 2	• Start dosing • Stop dosing • Pause/resume dosing • Start/stop totalizer 1, 2 or 3 • Reset totalizer 1, 2 or 3 • Zero adjust • Force outputs • Freeze process values
High signal	• Nominal voltage: 24 V DC • Upper limit: +30 V DC • Lower limit: +11 V DC • Current: max 35 mA
Low signal	• Nominal voltage: 0 V DC • Lower limit: -30 V DC • Upper limit: +5 V DC • Current: max 35 mA
Potential separation	• Module and backplane bus • Short circuit protection
Isolation test	707 V DC
Cable length	• Max. 50 m shielded • Max. 25 m unshielded
Digital outputs 1 and 2	
Free useable outputs 1 and 2	• Alarm acknowledgment • Out of specification • Failure sensor measuring • Function check • Status force value • Flow direction
Low signal	Max. 1 V
High signal	Min 23.2 V
Switching capacity	300 mA signal high
On lamp load	8 W
Load resistance	80 … 10 kΩ
Between diffrenet circuits	Electronic/thermal
Potential seperation	Module and backplane bus
Isolation test	707 V DC
Cable length	• Max. 50 m shielded • Max. 25 m unshielded

© Siemens 2021

Technical specifications (continued)

Environment	
Ambient temperature during operation	
Minimum installation	-25 °C
horizontal installation, max.	60 °C; observe derating
vertical installation, max.	50 °C; observe derating
Ambient temperature during storage/transport	
Storage, min.	-40 °C
Storage, max.	70 °C
Transport, min.	-40 °C
Transport, max.	70 °C
Relative humidity	
Operation, min.	5 %
Operation, max.	95 %; no condensation
Height in operation	
Ambient air pressure altitude (relative to sea level)	T_{min} ... T_{max} at 1 080 hPa ... 795 hPa (-1 000 m ... +2 000 m)
EMC performance	
Emission	• EN 61000-6-4
Electromagnetic compatibilty	• IEC 61000-6-2:2016 • IEC 61000-6-4:2018
Emission of radio interference	Class A industrial environment: • IEC 61000-6-4: 2018 • IEC/CISPR 16-2-3: 2008 • EN 55016-2-3: 2006
Emission on power supply cables	Class A Industrial environment: • IEC 61000-6-4: 2018 • IEC/CISPR 16-2-1: 2010 • EN 55016-2-1: 2009
Certification	
CE mark	Low voltage directive RoHS
UL	ANSI / ISA 12.12.01
CAN/CSA	CSA C22.2 No. 213-M1987 Class I, Div. 2 Group A.B.C.D T4
ATEX	II 3 G Ex ec IIC T4 Gc
IECEx	Ex ec IIC T4 Gc
EAC	Yes
Tick	Yes
KCC	Yes
RoHS	Yes
FM	Class I, Div. 2, Group A.B.C.D T4
Communication	
Digital Sensor Link	460.8 kBits/s
Cable length FCT070 to FC DSL Sensor	75 m (150 m)
Power supply FCS sensor	The operating voltage of the sensors is supplied via the sensor cable directly from the FCT070

Selection and ordering data

Description	Article No.	
SITRANS FCT070 Transmitter for ET 200SP	**7ME4138-6AA00-0BB1**	
BU20-P12+A0+4B, PU1 BaseUnit plate for ET 200SP	**6ES7193-6BP20-0BB0** **6ES7193-6BP20-0BB1**	
SITRANS I300 – Isolating power supply – Ex barrier	**A5E39832532**	
Compatible Coriolis sensors		
SITRANS FCS300	**7ME4637-…**	
SITRANS FCS400	**7ME4617-…**	
SITRANS MASS 2100	**7ME4817-…**	
SITRANS FC300 DN4	**7ME4817-…**	

Operating instructions for SITRANS FCT070

Description	Article No.
SITRANS FCT070 system manual • English • German	**A5E47701533-AA**

Circuit diagrams

Naming	Con.	PIN	BU20 type B1	PIN	Con.	Naming
Digital input	DI0	1	① ②	2	DQ0	Digital output
Digital input	DI1	3	③ ④	4	DQ1	Digital output
+24 V DC supply voltage for digital inputs	DI_L+	5	⑤ ⑥	6	nc	
Ground for digital outputs	M	7	⑦ ⑧	8	M	Ground for digital outputs
RS 485 data line A for SEN communication	SEN_A	9	⑨ ⑩	10	SEN_L+	+24 V DC supply voltage for SEN
RS 485 data line B for SEN communication	SEN_B	11	⑪ ⑫	12	SEN_M	GND for SEN supply
+24 V DC supply voltage	L+	13	⑬ ⑭	14	M	Ground for supply voltage
	L+	15	⑮ ⑯	16	M	

Pin assignment of the BaseUnit BU20-P12+A0+4B

© Siemens 2021

Overview

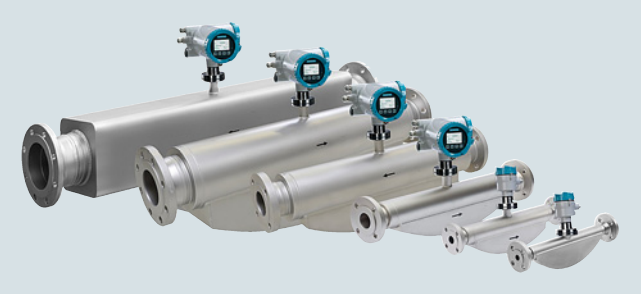

The SITRANS FCS300 sensor is available in DN 15 to DN 150 mm sizes in stainless steel AISI 316 L or nickel allow wetted material. The sensor design consists of process connections, inlet and outlet manifolds mounted in a stiff frame and two parallel tubes equally sharing the process medium flow.

The sensing tubes are curved in the CompactCurve shape which gives high sensitivity and low pressure loss. The CompactCurve shape was selected to ensure that the smallest flows are measured with optimal signal to noise ratio.

The compact sensor design with a split flow dual tube design with high driver frequency is suitable for high end applications in all industry segments e.g. Chemical, Oil & Gas , Refineries, F&B and Power.

A variety of process connections available to cover all common process connections and pressure ratings.

The sensor has a solid stainless steel fully welded enclosure to protect the measuring tubes from any harsh environments. For hazardous area applications the FCS300 comes in a number of common harzardous area approved like Atex, IECEx, cCSAus, EAC, and NEPSI.

Integration

The SITRANS FCS300 sensor is suitable for both indoor and outdoor installation and meets the requirements of Protection Class IP67/NEMA 4X. Optionally the sensor can be ordered with hazardous certification to Zone 1 and Div 1 (ATEX, IECEx, cCSAus, EAC Ex, NEPSI).

The flowmeter is bidirectional and can be installed in any orientation. The sensor is self-draining in many positions, with vertical mounting preferred.

It is important to ensure that the sensor tubes are always completely filled with homogeneous fluid; otherwise measuring errors may occur. Suitable fluids are clean liquids, pastes, light slurries or gases. Condensing vapours, aerated liquids or slush are not recommended.

The materials in contact with the process medium must be evaluated for corrosion and erosion resistances for long sensor life.

The pressure drop through the sensor is a function of the properties of the fluid and the flow rate. A pressure loss and accuracy calculator can be found on the Siemens internet site https://www.siemens.com.

The preferred flow direction is indicated by an arrow on the sensor. Flow in the direction of the arrow will be measured as positive. The flow direction can be adjusted at the transmitter to compensate for reverse installation.

Installation orientation

The optimal installation orientation is vertical with the flow upwards. This ensures that suspended solids or bubbles are completely pushed through the sensor. A drain valve below the sensor will allow the pipe and sensor to drain completely.

Supports

In order to support the weight of the flowmeter and to ensure reliable measurements when external effects exist (e.g. plant vibrations), the sensor should be installed in rigidly supported pipelines.

Supports or hangers should be installed symmetrically and stress-free in close proximity to both of the process connections.

Shut-off devices

To conduct a system zero adjustment, secure shut-off devices are required in the pipeline.

Where possible, shut-off devices should be installed both upstream and downstream of the flowmeter.

© Siemens 2021

Configuration

Installation guidelines

- The mass flowmeter does not require any flow conditioning or straight inlet pipe sections. Care should be exercised however to ensure that any upstream valves, gates, sight glasses etc. do not cavitate and are not set into vibration by the flow.
- It is always preferred to place the flowmeter upstream of any control valve or other pipeline component which may cause flashing, cavitation or vibrations.
- The presence of gas bubbles in the fluid may result in erroneous measurements, particularly in the density measurement. Therefore the flowmeter should not be installed at the lowest pressure point in the liquid piping system or where vapour can collect. Install the meter in pipeline sections with high pressure to maintain system pressure and compress any bubbles.
- Drop lines downstream from the flow sensor should be avoided to prevent the meter tube from draining during flowing conditions. A back-pressure device or orifice is recommended to ensure that flow does not separate within the flow sensor but the metering section remains at positive pressure at all times while there is flow.
- The flowmeter should not come into contact with any other objects. Avoid making attachments to the housing except for the pressure guard components (if required).
- When the connecting pipeline is larger than the sensor size, suitable standard reducers may be installed. A selection of oversize and undersize connections can be ordered - refer to the sizes tables below.
- The flow sensor may be supported at the junction between process connection and the manifold, but should not be used to support adjacent piping. Ensure that the piping is also supported on both sides so that connection stresses are neutral.
- If strong vibrations exist in the pipeline, they should be damped using elastic pipeline elements. The damping devices must be installed outside the supported flowmeter section. Direct connection of flexible elements to the sensor should be avoided.
- Make sure that any dissolved gases, which are present in many liquids, do not outgas. The back pressure at the outlet should be at least 0.2 bar (3 psi) above the vapour pressure of the process fluid.
- Assure that operation below the vapour pressure cannot occur particularly for fluids with low latent heat of vaporisation.
- The sensor should not be installed in the vicinity of strong electromagnetic fields, e.g. near motors, pumps, variable frequency drives, transformers etc.
- When operating meters on a common mounting base the sensors should be mounted and spaced separate from each other to avoid cross-talk and other vibration interferences.
- When operating meters in interconnected pipelines the pipes should be decoupled to prevent cross talk.

Remote system cabling

The system is designed so that standard instrumentation cable with four cores and overall screen or two screened pairs can be used, or cable sets can be ordered with the flowmeter. The cable can be ordered in various set lengths and terminated in the field.

Be aware of maximum sensor length cable depending on product selection, currently 75 m. Data transmission speed and process variable update rates may be affected by the cable characteristics. For best results, choose a cable with the following electrical characteristics:

Property	Unit	Value
Resistance	[Ω/km]	59
Characteristic impedance	[Ω]	100 @ 1 MHz
Insulation resistance	[MΩ/km]	200
Maximum voltage	[V]	300

The flowmeter system applies maximum 15 V DC in operation and is certified intrinsically safe. The complete system is insulation tested to 1 500 V in production.

Cabling solutions which can be ordered with the flowmeter are as follows:

1. High performance plugged cable using M12 connectors into prepared sockets
2. Cable glands for either metric or NPT threaded terminal housings
3. Plain cable in set lengths to be passed through flexible and rigid conduit (not supplied) for metric or NPT threaded terminal housings

Cable for items 1, 2 and 3 are available either gray for standard applications or light blue for Ex applications to identify the circuit as intrinsically safe.

Insulation and heating

For applications where pipeline insulation is required for personnel protection or process temperature maintenance, the SITRANS FCS300 flow sensor may also be insulated. The form and material of insulation is not prescribed and entirely depends on the practices at the application location or plant.

Insulation must not be crowded around the sensor pedestal but shaped at a 45° cone to allow the pedestal to radiate excess heat and maintain a suitable working temperature within the front-end transmitter housing.

© Siemens 2021

Technical specifications

Flow sensor FCS300		
Parameter	**Unit**	**Value**
Process media		• Fluid Group 1 (suitable for dangerous fluids) • Aggregate state: Paste/light slurry, liquid and gas
Process pressure range	[barg (psi)]	The maximum permissible operating pressure is determined by the respective process connection and the temperature of the medium 316L: 0 ... 100 (0 ... 1 450) Nickel-alloy C4 (2.4610)[3]: 0 ... 100 (0 ... 1 450)
Process temperature range	[°C (°F)]	The maximum permissible process temperature is determined by the respective process connection -50 ... +205 (-58 ... +400)
Ambient temperature range	[°C (°F)]	-40 ... +70 (-40 ... +158)
Transport temperature range	[°C (°F)]	-40 … +70 (-40 … +158)
Density range	[kg/m^3 (lb/ft^3)]	1 … 5 000 (0.062 … 312.2)
No. of process values		
• Primary process values		• Mass flow • Density • Process medium temperature
• Derieved process values		• Volume flow • Standard volume flow (with reference density) • Fraction A:B • Fraction % A:B

Performance specifications		**Sensor**					
Parameter	**Unit**	**DN 15**	**DN 25**	**DN 50**	**DN 80**	**DN 100**	**DN 150**
Max. zero point error		0.6 (0.0235)	2.16 (0.0792)	7.2 (0.264)	20 (0.735)	41.6 (1.628)	68.8 (2.528)
Q_{min} (1 % error)[4]	[kg/h (lb/min)]	70 (2.57)	240 (8.92)	800 (29.4)	2 000 (73.5)	4 000 (146.9)	6 900 (253.5)
Q_{nom} (1 bar pressure)	[kg/h (lb/min)]	4 500 (163.3)	20 500 (753.2)	49 000 (1 800)	122 000 (4 483)	273 000 (10 031)	459 200 (16 873)
Qmax[2]	[kg/h (lb/min)]	8 000 (293.9)	35 000 (1 286)	90 000 (3 307)	250 000 (9 186)	520 000 (19 107)	860 000 (31 600)
Linearity error mass flow							
• for liquids[1]	0.1% massflow sensor [%]	± 0.1	± 0.1	± 0.1	± 0.1	± 0.1	± 0.1
	0.2% massflow sensor [%]	± 0.2	± 0.2	± 0.2	± 0.2	± 0.2	± 0.2
• for gases (additional)	[%]	± 0.40	± 0.40	± 0.40	± 0.40	± 0.40	± 0.40
Repeatability mass flow	[%]	± 0.05	± 0.05	± 0.05	± 0.05	± 0.05	± 0.05
Density accuracy with 0.1%	[kg/m^3 (lb/ft^3)]	± 2 (± 0.124)	± 2 (± 0.124)	± 2 (± 0.124)	± 2 (± 0.124)	± 2 (± 0.124)	± 2 (± 0.124)
Density accuracy with 0.2 %	[kg/m^3 (lb/ft^3)]	± 10 (± 0.62)	± 10 (± 0.62)	± 10 (± 0.62)	± 10 (± 0.62)	± 10 (± 0.62)	± 10 (± 0.62)
Temperature error	[°K]	± 0.5	± 0.5	± 0.5	± 0.5	± 0.5	± 0.5

1) Increased error can be expected for gas mass flow measurement (for gas measurement typically + 0.40 % error).

2) For gas applications the max. flowrate is calculated at Mach-Number = 0.3.

3) Hastelloy C is a registered trademark of Haynes International. C4 nickel alloys are equivalent to Hastelloy C4.

4) Valid for the 0.1% sensor.

© Siemens 2021

Technical specifications (continued)

Pressure/temperature curves

With two major exceptions, the pressure rating of the flow sensors is independent of the process medium temperature. Design rules for flange connections in both the EN 1092-1 and ASME B16.5 standards dictate pressure derating with increasing temperature. The charts below show the effect of process medium temperature on the pressure ratings for the flanges within the FCS300 product program.

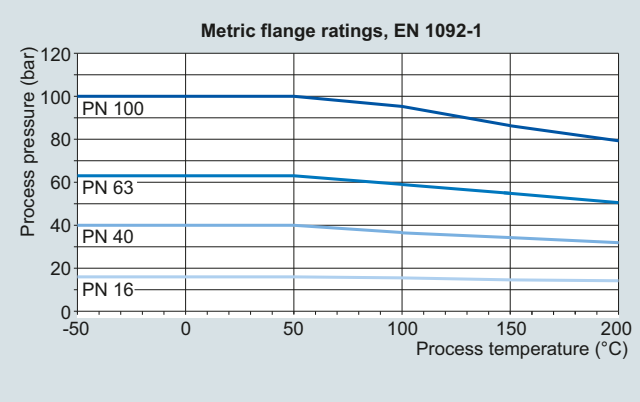

EN1092-1 flanged sensors in AISI 316L

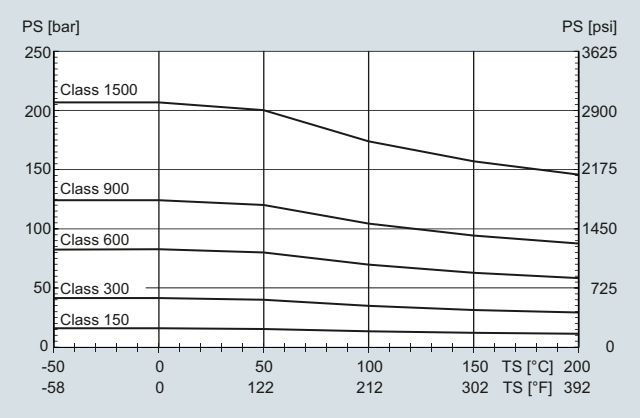

Stainless steel ASME flange 1.4571/1.4404 (AISI 316Ti/316L) up to DN200 (8")

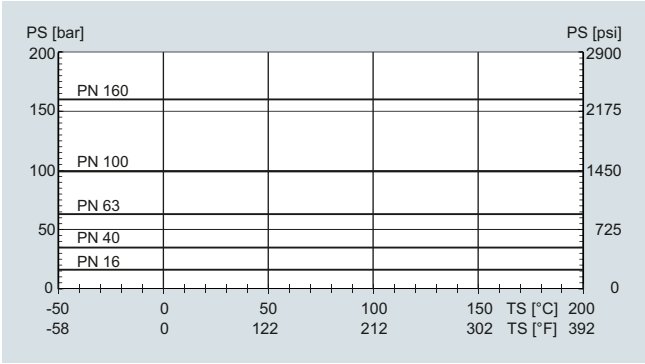

Nickel alloy DIN flange C4 (2.4610) or nickel alloy C22 (2.4602) up to DN200 (8")

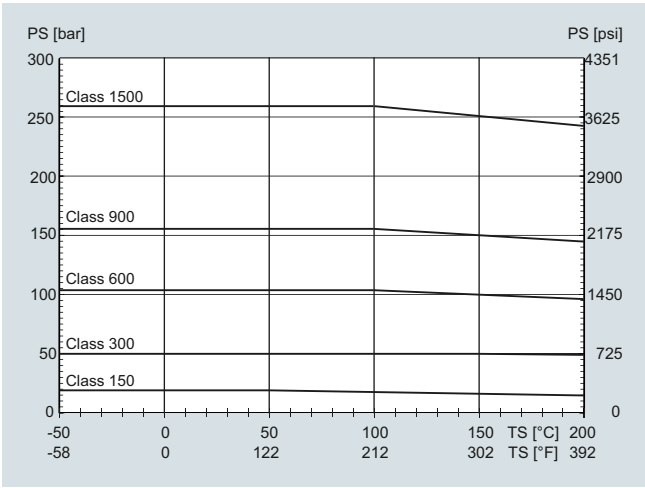

Nickel alloy ASME flange C4 (2.4610) or nickel alloy C22 (2.4602) up to DN200 (8")

Sanitary connections

Design	Nominal size	PS_{max}		TS_{max}		TS_{min}	
		[bar]	[psi]	[°C]	[°F]	[°C]	[°F]
Pipe fitting DIN 11851	DN 15 ... 40 (½ ... 1½")	40	580	140	284	-40	-40
	DN 50 ... 100 (2 ... 4")	25	363	140	284	-40	-40
Pipe fitting SMS 1145	DN 25 ... 80 (1 ... 3")	6	87	140	284	-40	-40
Clamp DIN 32676	DN 15 ... 50 (½ ... 2")	16	232	120	248	-40	-40
	DN 65 ... 100 (2½ ... 4")	10	145	120	248	-40	-40

© Siemens 2021

Technical specifications (continued)

Sensor variants

SITRANS FCS300 sensors are available in a wide range of process connections. The available combinations of type, sensor size and connection size are shown in the tables below.

Standard variants

Sensor	Connection	EN 1092-1 B1, PN 16	EN 1092-1 B1, PN 40	EN 1092-1 B2, PN 63	EN 1092-1 B2, PN 100	EN 1092-1 D, PN 40	ANSI B16.5-2009, class 150	ANSI B16.5-2009, class 300	ANSI B16.5-2009, class 600	ANSI B16.5-2009, class 900	ANSI B16.5-2009, class 1500	ISO 228-1 G female pipe thread	ASME B1.20.1 NPT female pipe thread	DIN 11851 hygienic screwed	DIN 32676 clamp (ISO) Row A	SMS 1145 hygienic screwed	JIS B2220:2004/10K	JIS B2220:2004/20K	EN 1092-1 PN 16, NAMUR length	EN 1092-1 PN 40, NAMUR length
Standard: 7ME463.-...																				
DN 15 (½")	DN 10 (3/8")		●									●		●	●		●	●		
	DN 15 (½")		●	●	●	●	●	●	●	●[1]	●[1]	●	●	●	●		●	●		●
	DN 20 (¾")		●				●							●	●		●	●		
DN 25 (1")	DN 20 (¾")		●				●							●	●		●	●		
	DN 25 (1")		●	●	●	●	●	●	●	●[1]	●[1]			●	●	●	●	●		●
	DN 40 (1½")		●	●	●		●	●	●					●	●	●	●	●		
DN 50 (2")	DN 40 (1½")		●	●	●		●	●	●	●	●			●	●	●	●	●		
	DN 50 (2")		●	●	●	●	●	●	●	●[1]	●[1]			●	●	●	●	●		●
	DN 65 (2½")		●	●			●		●	●[1]	●[1]			●	●	●	●	●		
DN 80 (3")	DN 65 (2½")		●	●	●		●	●	●	●[1]	●[1]			●	●	●	●	●		
	DN 80 (3")		●	●	●	●	●	●	●	●[1]	●[1]			●	●	●	●	●		●
	DN 100 (4")	●	●	●	●		●	●	●	●[1]	●[1]			●	●		●	●		
DN 100 (4")	DN 80 (3")	●	●	●	●		●		●	●[1]	●[1]						●	●		
	DN 100 (4")	●	●	●	●		●	●	●	●[1]	●[1]						●	●	●	
	DN 150 (6")	●	●	●	●		●	●	●	●[1]	●[1]						●	●		
DN 150 (6")	DN 100 (4")	●	●	●	●		●		●	●[1]	●[1]							●		
	DN 150 (6")	●	●	●	●		●	●	●	●[1]	●[1]							●	●	
	DN 200 (8")	●	●	●	●		●	●	●	●[1]	●[1]							●		

[1] Apply class 600 p and t ratings for class 900 and class 1500 flanges.

Hygienic sensor variants

The hygienic sensors will have to be ordered with stainless steel tubes 316L/1.4435/1.4404 (polished). Hygienic sensors are offered with process connection conforming to various international quick-connect clamps or threaded connectors. Pressure ratings are according to the relevant standard and the sensor size.

NAMUR sensor variants

The NAMUR variants have built-in lengths according to NAMUR recommendation NE 132. The recommendations of NE 132 are stated for sensors with flanges the same size as the sensor nominal size, and for flanges to EN 1092-1 PN 40 with B1 flange facing. For DN 100 and DN 150 flanges to PN 16.

© Siemens 2021

3

Dimensional drawings

Sensor dimensions

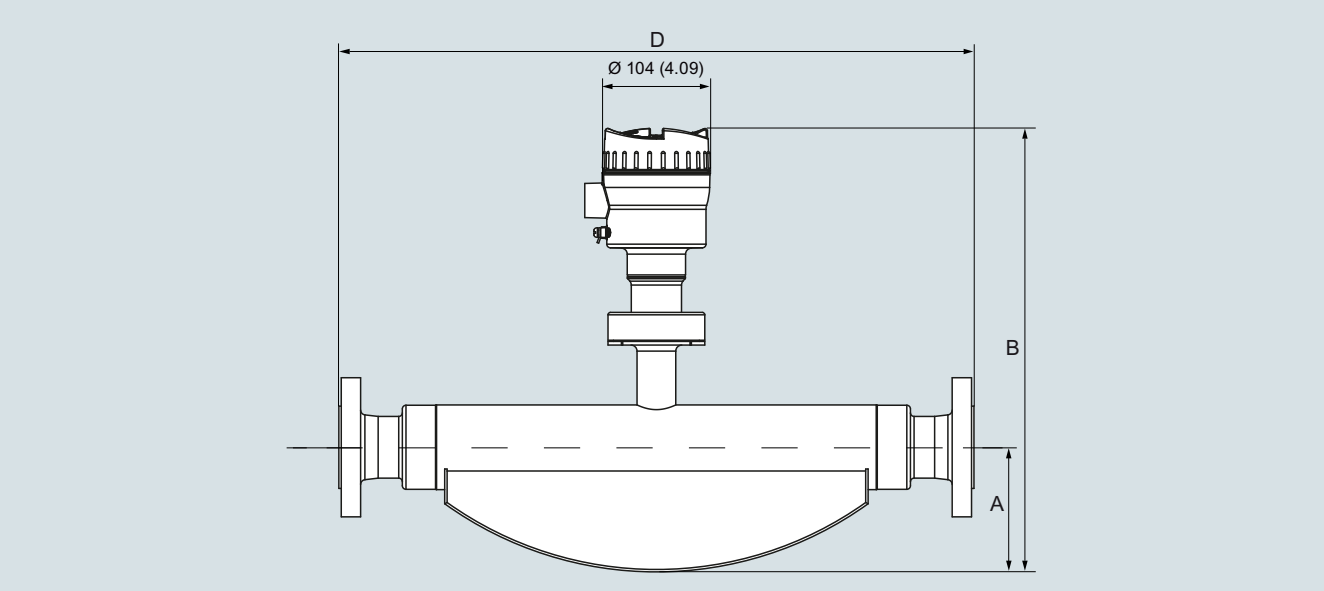

SITRANS FCS300 remote sensor

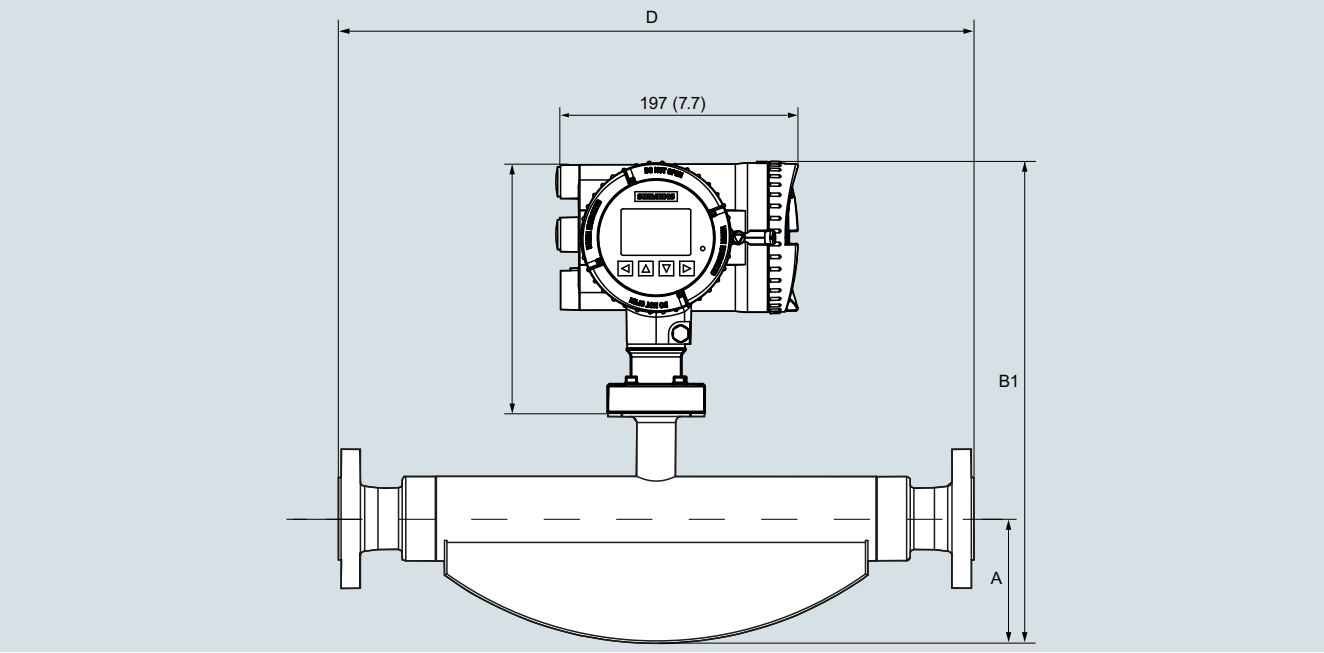

SITRANS FCS300 compact

Sensor		A		B		B1		Weight[1)]	
[DN]	[inch]	[mm]	[inch]	[mm]	[inch]	[mm]	[inch]	[kg]	[lb]
15	½	80	3.15	358	14.09	387	15.19	4.6	10.1
25	1	103	4.06	398	15.67	427	16.77	7.9	17.4
50	2	126	4.96	435	17.13	464	18.23	25.7	56.7
80	3	181	7.13	525	20.67	554	21.77	66.5	147
100	4	262	10.31	622	24.49	651	25.59	128	282
150	6	317	12.48	714	28.11	743	29.21	207	456

1) For FCT030 compact add 4 kg (8.8 lb)

SITRANS FCS300, dimensions in mm (inch), weights in kg (lb), for a EN 1092 PN 40 flanged version.

The built-in length D depends on the flange.

© Siemens 2021

Dimensional drawings (continued)

Overall length

The overall length (built-in length (D)) of each sensor depends on the connection standard and the pressure rating.
The tables below summarize the dimensions available at the time of publishing. Please contact Siemens for further information about our desired process connection specification.

Sensor in AISI 316L: 7ME463.-...

Sensor AISI 316L	**DN 15 (½")**			**DN 25 (1")**			**DN 50 (2")**		
Connection	**DN 10 (3/8")**	**DN 15 (½")**	**DN 20 (¾")**	**DN 20 (¾")**	**DN 25 (1")**	**DN 40 (1½")**	**DN 40 (1½")**	**DN 50 (2")**	**DN 65 (2½")**
EN 1092-1 B1, PN 16									
EN 1092-1 B1, PN 40	385	385	421	576	525	576	763	715	763
EN 1092-1 B2, PN 63		403			564	572	745	745	
EN 1092-1 B2, PN 100		403			564	576	745	745	
EN 1092-1 D, PN 40		385			525			715	
ASME B16.5, class 150		435	421	575	575	576	763	715	756
ASME B16.5, class 300		421			576	576	756	763	
ASME B16.5, class 600		421			576		756	773	
ASME B16.5, class 900		421			576		780	790	800
ASME B16.5, class 1500		421					780	790	800
ISO 228-1 G female pipe thread		450							
ASME B1.20.1 NPT female pipe thread		450							
DIN 11851 hygienic screwed	413	413	413	590	590	590	763	740	740
DIN 32676 Row A hygienic clamp	413	413	413	590	590	590	763	740	740
SMS 1145 hygienic screwed					590	590	763	740	740
JIS B2220/10K	385	385	421	576	525	576	763	715	763
JIS B2220/20K	385	385	421	576	525	576	763	715	763
EN 1092-1 PN 16, NAMUR length									
EN 1092-1 PN 40, NAMUR length		510			600			715	

Sensor	**DN 80 (3")**			**DN 100 (4")**			**DN 150 (6")**		
Connection	**DN 65 (2½")**	**DN 80 (3")**	**DN 100 (4")**	**DN 80 (3")**	**DN 100 (4")**	**DN 150 (6")**	**DN 100 (4")**	**DN 150 (6")**	**DN 200 (8")**
EN 1092-1 B1, PN 16			875	1222	1122	1260	1569	1421	1587
EN 1092-1 B1, PN 40	910	870	875	1222	1144	1260	1599	1461	1650
EN 1092-1 B2, PN 63	910	910	1060	1234	1304				
EN 1092-1 B2, PN 100	910	910	1080	1234	1334				
EN 1092-1 D, PN 40		870							
ASME B16.5, class 150		880	880	1244	1144	1330	1630	1485	1650
ASME B16.5, class 300	920	895	1075	1244	1324	1350		1505	1670
ASME B16.5, class 600	920	920	1100	1244	1354	1400	1675	1555	
ASME B16.5, class 900	965	1100	1130	1470	1380	1450	1705	1605	
ASME B16.5, class 1500	965	1300	1150	1500	1400	1510	1725	1665	
ISO 228-1 G female pipe thread									
ASME B1.20.1 NPT female pipe thread									
DIN 11851 hygienic screwed	990	940	940						
DIN 32676 (ISO) Row A hygienic clamp	950	910	910						
SMS 1145 hygienic screwed	990	940							
JIS B2220/10K	910	870		1275	1150	1300			
JIS B2220/20K	910	870		1275	1150	1308			
EN 1092-1 PN 16, NAMUR length					1400			1700	
EN 1092-1 PN 40, NAMUR length		915							

SITRANS FCS300, overall length (D), dimensions in mm

© Siemens 2021

Dimensional drawings (continued)

Sensor	DN 15 (½")			DN 25 (1")			DN 50 (2")		
Connection	**DN 10 (3/8")**	**DN 15 (½")**	**DN 20 (¾")**	**DN 20 (¾")**	**DN 25 (1")**	**DN 40 (1½")**	**DN 40 (1½")**	**DN 50 (2")**	**DN 65 (2½")**
EN 1092-1 B1, PN 16									
EN 1092-1 B1, PN 40	15.16	15.16	16.57	22.68	20.67	22.68	30.04	28.15	30.04
EN 1092-1 B2, PN 63		15.87			22.20	22.52	29.33	29.33	
EN 1092-1 B2, PN 100		15.87			22.20	22.68	29.33	29.33	
EN 1092-1 D, PN 40		15.16			20.67			28.15	
ASME B16.5, class 150		17.13	16.57	22.64	22.64	22.68	30.04	28.15	29.76
ASME B16.5, class 300		16.57			22.68	22.68	29.76	30.04	
ASME B16.5, class 600		16.57			22.68	22.68	29.76	30.43	
ASME B16.5, class 900		16.57			22.68		30.71	31.10	31.50
ASME B16.5, class 1500		16.57			22.68		30.71	31.10	31.50
ISO 228-1 G female pipe thread		17.72							
ASME B1.20.1 NPT female pipe thread		17.72							
DIN 11851 hygienic screwed	16.26	16.26	16.26	23.23	23.23	23.23	30.04	29.13	29.13
DIN 32676 (ISO) Row A hygienic clamp	16.26	16.26	16.26	23.23	23.23	23.23	30.04	29.13	29.13
SMS 1145 hygienic screwed					23.23	23.23	30.04	29.13	29.13
JIS B2220/10K	15.16	15.16	16.57	22.68	20.67	22.68	30.04	28.15	30.04
JIS B2220/20K	15.16	15.16	16.57	22.68	20.67	22.68	30.04	28.15	30.04
EN 1092-1 PN 16, NAMUR length									
EN 1092-1 PN 40, NAMUR length		20.08			23.62			28.15	

Sensor	DN 80 (3")			DN 100 (4")			DN 150 (6")		
Connection	**DN 65 (2½")**	**DN 80 (3")**	**DN 100 (4")**	**DN 80 (3")**	**DN 100 (4")**	**DN 150 (6")**	**DN 100 (4")**	**DN 150 (6")**	**DN 200 (8")**
EN 1092-1 B1, PN 16			34.45	48.11	44.17	49.61	61.77	55.94	62.48
EN 1092-1 B1, PN 40	35.83	34.25	34.45	48.11	45.04	49.61	62.95	57.52	64.96
EN 1092-1 B2, PN 63	35.83	35.83	41.73	48.58	51.34				
EN 1092-1 B2, PN 100	35.83	35.83	42.52	48.58	52.52				
EN1092-1 D, PN 40		34.25							
ASME B16.5, class 150		34.65	34.65	48.98	45.04	52.36	64.17	58.46	64.96
ASME B16.5, class 300	36.22	35.24	42.32	48.98	52.13	55.12		59.25	65.75
ASME B16.5, class 600	36.22	36.22	43.31	48.98	53.31	57.14	65.94	61.22	
ASME B16.5, class 900	37.99	43.31	44.49	57.87	54.33	57.09	67.13	63.19	
ASME B16.5, class 1500	37.99	51.18	45.28	59.06	55.12	59.45	67.91	65.55	
ISO 228-1 G female pipe thread									
ASME B1.20.1 NPT female pipe thread									
DIN 11851 hygienic screwed	38.98	37.01	37.01						
DIN 32676 (ISO) Row A hygienic clamp	37.40	35.83	35.83						
SMS 1145 hygienic screwed	38.98	37.01							
JIS B2220/10K	35.83	34.25		50.20	45.28	50.20			
JIS B2220/20K	35.83	34.25		50.20	45.28	51.50			
EN 1092-1 PN 16, NAMUR length					55.12			66.93	
EN 1092-1 PN 40, NAMUR length		36.02							

SITRANS FCS300, overall length (D), dimensions in inch

© Siemens 2021

Dimensional drawings (continued)

Sensor in nickel-alloy C4: 7ME463.-...

Sensor nickel-alloy C4	DN 15 (½")			DN 25 (1")			DN 50 (2")		
Connection	**DN 10 (3/8")**	**DN 15 (½")**	**DN 20 (¾")**	**DN 20 (¾")**	**DN 25 (1")**	**DN 40 (1½")**	**DN 40 (1½")**	**DN 50 (2")**	**DN 65 (2½")**
EN 1092-1 B1, PN 40	449	442	428	646	614	576	814	764	819
EN 1092-1 B2, PN 63	449	442	428	646	614	576	814	764	819
EN 1092-1 B2, PN 100	449	442	428	646	614	576	814	764	819
ANSI B16.5, class 150		442	428	646	614	576	814	764	819
ANSI B16.5, class 300		442	428	646	614	576	814	764	819
ANSI B16.5, class 600		442	428	646	614	576	814	764	819
JIS B2220/10K		442	428	646	614	576	814	764	819

Sensor	DN 80 (3")			DN 100 (4")			DN 150 (6")		
Connection	**DN 65 (2½")**	**DN 80 (3")**	**DN 100 (4")**	**DN 80 (3")**	**DN 100 (4")**	**DN 150 (6")**	**DN 100 (4")**	**DN 150 (6")**	**DN 200 (8")**
EN 1092-1 B1, PN 16			971	1357	1280	1261	1592	1502	
EN 1092-1 B1, PN 40	1021	971	971	1357	1280	1261	1592	1502	
EN 1092-1 B2, PN 63	1021		971	1357	1280	1261	1632	1542	
EN 1092-1 B2, PN 100	1021	971	971	1357	1280	1261	1632	1542	
ANSI B16.5, class 150	1021	971	971	1357	1280	1261	1592	1502	
ANSI B16.5, class 300	1021	971	971	1357	1280	1261	1632	1542	
ANSI B16.5, class 600	1021	971	971	1357	1280	1261	1632	1542	
JIS B2220/10K	1021	971	971	1357	1280	1261	1592	1502	

SITRANS FCS300, overall length (D), dimensions in mm

Sensor	DN 15 (½")			DN 25 (1")			DN 50 (2")		
Connection	**DN 10 (3/8")**	**DN 15 (½")**	**DN 20 (¾")**	**DN 20 (¾")**	**DN 25 (1")**	**DN 40 (1½")**	**DN 40 (1½")**	**DN 50 (2")**	**DN 65 (2½")**
EN 1092-1 B1, PN 40	17.7	17.4	16.9	25.4	24.2	22.7	32.0	30.1	32.2
EN 1092-1 B2, PN 63	17.7	17.4	16.9	25.4	24.2	22.7	32.0	30.1	32.2
EN 1092-1 B2, PN 100	17.7	17.4	16.9	25.4	24.2	22.7	32.0	30.1	32.2
ANSI B16.5, class 150		17.4	16.9	25.4	24.2	22.7	32.0	30.1	31.2
ANSI B16.5, class 300		17.4	16.9	25.4	24.2	22.7	32.0	30.1	31.2
ANSI B16.5, class 600		17.4	16.9	25.4	24.2	22.7	32.0	30.1	31.2
JIS B2220/10K		17.4	16.9	25.4	24.2	22.7	32.0	30.1	32.2

Sensor	DN 80 (3")			DN 100 (4")			DN 150 (6")		
Connection	**DN 65 (2½")**	**DN 80 (3")**	**DN 100 (4")**	**DN 80 (3")**	**DN 100 (4")**	**DN 150 (6")**	**DN 100 (4")**	**DN 150 (6")**	**DN 200 (8")**
EN 1092-1 B1, PN 16			38.2	53.4	50.4	49.6	62.7	59.1	
EN 1092-1 B1, PN 40	40.2	38.2	38.2	53.4	50.4	49.6	62.7	59.1	
EN 1092-1 B2, PN 63	40.2		38.2	53.4	50.4	49.6	64.3	60.7	
EN 1092-1 B2, PN 100	40.2	38.2	38.2	53.4	50.4	49.6	64.3	60.7	
ANSI B16.5, class 150	40.2	38.2	38.2	53.4	50.4	49.6	62.7	59.1	
ANSI B16.5, class 300	40.2	38.2	38.2	53.4	50.4	49.6	64.3	60.7	
ANSI B16.5, class 600	40.2	38.2	38.2	53.4	50.4	49.6	64.3	60.7	
JIS B2220/10K	35.83	34.25	41.73	53.4	50.4	49.6	62.7	59.1	

SITRANS FCS300, overall length (D), dimensions in inch

© Siemens 2021

SITRANS FC330 flowmeter system

Overview



The complete flowmeter system SITRANS FC330 can be ordered for standard, hygienic or NAMUR service. The flowmeter is based on the latest developments within digital signal processing technology – engineered for high measuring performance:

- Fast response to rapid changes in flow
- Fast dosing applications
- High immunity against process noise
- High turndown ratio of flowrates
- Suitable for liquid and gas service
- Easy to install, commission and maintain

With all global marine approvals the FC330 is ideal for integration in ship fuel efficiency and environmental measurement systems as well as bunkering solutions.
FC330 is available with current output HART 7.5, Modbus RS 485 RTU, PROFIBUS DP or PROFIBUS PA as standard on Channel 1. Additional functions can be freely configured for analog, pulse, frequency, relay or status output or binary input.

The transmitter comes with a user-configurable graphical display and SensorFlash, a micro SD card for configuration backup, firmware update and data storage.

The SITRANS FC330 flowmeter system consists of a SITRANS FCS300 sensor and a SITRANS FCT030 transmitter.

Benefits

- It is compact and light, fitting neatly into dense piping arrangements
- Easy maintenance because modules can be exchanged rapidly
- Effective separation of measurement from plant vibration
- Highly secure operation in safety critical applications
- Non-volatile memory of all setup and operation data
- Reliable measurements due to high signal to noise ratio
- Secure, digital transfer of measurement data from the sensor
- Short overall length; easy drop-in replacement into most existing installations

© Siemens 2021

Technical specifications

Sizes	DN 15 (½") DN 25 (1") DN 50 (2") DN 80 (3") DN 100 (4") DN 150 (6")
Accuracy	± 0.10 % or 0.20 % for liquids additional ±0.40 for gases
Repeatability	± 0.05 %
Flow range (liquids)	
(water @ 1 bar pressure loss) (Q_{nom})	
• DN 15	4 500 kg/h (163.3 lb/min)
• DN 25	20 500 kg/h (753.2 lb/min)
• DN 50	49 000 kg/h (1 800 lb/min)
• DN 80	122 000 kg/h (4 483 lb/min)
• DN 100	273 000 kg (10 031 lb/min)
• DN 150	459 200 kg/h (16 873 lb/min)
Architecture	Compact or remote configuration
Display	Full graphical display, 240 × 160 pixels with selection of 6 languages
Power supply	20 ... 90 V DC ± 10 %; 100 ... 240 V AC ± 10 %, 47 ... 63 Hz ± 10 %
Material	
• Sensor	
- Wetted parts	316L stainless steel or nickel alloy C4
- Enclosure	304 stainless steel
• Transmitter	Aluminum with corrosion-resistant coating class C4
Enclosure rating	IP67[1)]
Pressure ratings	
• Measuring tubes	
- 316L	100 bar (1 450 psi)
- Nickel alloy C4	100 bar (1 450 psi)
• Sensor enclosure	No pressure containment
Temperature ratings	
• Process medium	-50 ... +205 °C (-58 ... +400 °F)
• Ambient	-40 ... +60 °C (-40 ... +140 °F)[1)]
• Display	-20 ... +60 °C (-4 ... +140 °F)

Process connections	
• Flanges	EN 1092-1 B1, EN 1092-1 B2, EN 1092-1 D, ANSI/ASME B16.5, JIS B 2220
• Pipe threads	ASME B1.20 (NPT) female pipe thread, ISO 228-1 G female pipe thread (BSPP)
• Hygienic threads	DIN 11851, SMS 1145
• Hygienic clamps	DIN 32676 (ISO) Row A
Approvals	
• Hazardous area (zone 1)	ATEX, IECEx, EAC Ex, CSA, cCSAus, NEPSI, EAC No dust approval
• Pressure equipment	PED, CRN
• Hygienic	EHEDG (DN 25 ... DN 80) (in preparation)
• Marine (in preparation for FC330 compact)	Germanischer Lloyd/det Norske Veritas, Bureau Veritas, Lloyds of London, American Bureau of Shipping, RINA (Italy)
NAMUR	NAMUR-compliant (e.g. NE 21, NE 41, NE 107 and NE 132)
I/O	Up to 4 channels combining analog, relay or digital outputs and binary input
Communication	HART PROFIBUS PA PROFIBUS DP Modbus RTU (RS 485)
EMC performance	
Emission	EN 55011/CISPR-11 (Class A)
Immunity	EN/IEC 61326-1 (Industry)
Mechanical load	18 ... 400 Hz random The flow meter will mechanically tolerate 3.17 g RMS in all directions. Flow accuracy cannot be guaranteed under all conditions.

[1)] If operating outdoors, avoid direct sunlight, paritcularly in warm climatic regions.

© Siemens 2021

SITRANS FC330 flowmeter system

Selection and ordering data — Article No.

SITRANS FC330 digital coriolis flowmeter with SITRANS FCS300 standard flow sensor compact or remote mounting with FCT030 transmitter ↗	7ME4633-					-					Ord. code		
↗ Click on the Article No. for the online configuration in the PIA Life Cycle Portal.													
Sensor size, connector size													
DN 15, DN 10 (½", 3/8")	3	F											
DN 15, DN 15 (½", ½")	3	G											
DN 15, DN 20 (½", ¾")	3	H											
DN 25, DN 20 (1", ¾")	3	K											
DN 25, DN 25 (1", 1")	3	L											
DN 25, DN 40 (1", 1½")	3	N											
DN 50, DN 40 (2", 1½")	4	B											
DN 50, DN 50 (2", 2")	4	C											
DN 50, DN 65 (2", 2½")	4	D											
DN 80, DN 65 (3", 2½")	4	J											
DN 80, DN 80 (3", 3")	4	K											
DN 80, DN 100 (3", 4")	4	L											
DN 100, DN 80 (4", 3")	5	M											
DN 100, DN 100 (4", 4")	5	N											
DN 100, DN 150 (4", 6")	5	Q											
DN 150, DN 100 (6", 4")	6	D											
DN 150, DN 150 (6", 6")	6	F											
DN 150, DN 200 (6", 8")	6	H											
Process connection													
EN 1092-1 B1, PN 16			A	0									
EN 1092-1 B1, PN 40			A	1									
EN 1092-1 B2, PN 63			A	2									
EN 1092-1 B2, PN 100			A	3									
EN 1092-1 D, PN 40			A	5									
ASME B16.5 RF, lass 150			D	1									
ASME B16.5 RF, Class 300			D	2									
ASME B16.5 RF, Class 600			D	3									
ASME B16.5 RF, Class 900 (p- and t-rating as Class 600)			D	4									
ASME B16.5 RF, Class 1500 (p- and t-rating as Class 600)			D	5									
ISO 228-1G female pipe thread			E	1									
ASME B1.20.1 NPT female pipe thread			E	3									
DIN 11851 hygienic screwed			F	1									
DIN 32676 hygenic clamp (ISO) Row A			G	2									
SMS 1145 hygienic screwed			K	1									
JIS B2220/10K			L	2									
JIS B2220/20K			L	4									
EN 1092-1, PN 16, NAMUR length			N	1									
EN 1092-1, PN 40, NAMUR length			N	2									
Wetted parts material													
AISI 316L/1.4435/1.4404					1								
AISI 316L/1.4435/1.4404 (polished)					2								
Nickel alloy C4					3								

Selection and ordering data — Article No.

SITRANS FC330 digital coriolis flowmeter with SITRANS FCS300 standard flow sensor compact or remote mounting with FCT030 transmitter	7ME4633-					-					Ord. code		
Calibration/Accuracy class													
0.2 % flow, 10 kg/m³ density							0						
0.1 % flow, 2 kg/m³ density							1						
0.1 % Standard fraction (with density 2 kg/m³)							8						
0.1 % Customer selected fraction							9				N	0	Y
Mounting style, transmitter housing and material													
None (replacement sensor)								A					
Compact, IP67 fieldmount, aluminum								D					
Remote, IP67 fieldmount, aluminum, M12								G					
Remote, IP67 fieldmount, aluminum, T/Box								K					
Remote, IP67, wall mount, aluminium (in preparation)								U					
Ex approval (depending on variant)													
Non-Ex									A				
ATEX (zone 1)									C				
IECEx (zone 1)									F				
US (cCSAus), Div 1									L				
Canada (cCSAus), zone 1									M				
NEPSI									N				
INMETRO (in preparation)									P				
KCC (in preparation)									Q				
EAC									U				
Local User Interface													
None (replacement sensor, DSL only)										0			
Blind										1			
Graphical, 240 × 160 pxl										3			

Selection and ordering data — Order code

	Order code
Further designs Please add "**-Z**" to Article No. and specify Order code(s).	
Cable glands	
None (replacement sensor)	**A00**
Metric, no glands	**A01**
Metric, nylon, limited to -20 °C/-4 °F	**A02**
Metric, brass/Ni plated	**A05**
Metric, stainless steel	**A06**
NPT, no glands	**A11**
NPT, nylon, limited to -20 °C/-4 °F	**A12**
NPT, brass/Ni plated	**A15**
NPT, stainless steel	**A16**
Metric thread with M12 socket fitted	**A20**
Sofware functions and CT approvals	
None (replacement sensor)	**B10**
Standard	**B11**

© Siemens 2021

Selection and ordering data

	Order code
Further designs	
Please add "**-Z**" to Article No. and specify Order code(s).	
I/O configuration Ch1	
No output channel	**E00**
4 ... 20 mA HART Active/Passive (non-Ex)	**E02**
Ca 4 ... 20 mA HART active (Ex)	**E06**
Ca 4 ... 20 mA HART passive (Ex)	**E07**
PROFIBUS PA	**E10**
PROFIBUS DP (non-Ex)	**E11**
Modbus RTU RS 485	**E14**
I/O configuration Ch2, Ch3 and Ch4	
None	**F00**
• Non Ex: Sig O, None, None	**F01**
• Non Ex: Sig O, Sig I/O, None	**F02**
• Non Ex: Sig O, Sig I/O, Sig I/O	**F03**
• Non Ex: Sig O, Sig I/O, R	**F04**
• Non Ex: Sig O, R, R	**F05**
• Non Ex: Sig O, R, None	**F06**
• Ex: pSig O, None, None	**F11**
• Ex: pSig O, pSig I/O, None	**F12**
• Ex: pSig O, pSig I/O, pSig I/O	**F13**
• Ex: pSig O, pSig I/O, R	**F14**
• Ex: pSig O, R, R	**F15**
• Ex: pSig O, R, None	**F16**
• Ex: aSig O, None, None	**F21**
• Ex: aSig O, aSig I/O, None	**F22**
• Ex: aSig O, aSig I/O, aSig I/O	**F23**
• Ex: aSig O, aSig I/O, R	**F24**
• Ex: aSig O, R, R	**F25**
• Ex: aSig O, R, None	**F26**

Notes on I/O configurations:

a or p suffix: The I/O module is selected at ordering with either active or passive function.

Signal: The output can be selected for Current (0 or 4 to 20 mA), frequency or pulse function in the menu.

I: Discrete status input to the flowmeter. Functions are selected in the menu including 'Freeze output', 'Reset totalizer' (only CH3&4).

R: Relay output for discrete status reporting. Function is selected in the menu, including 'Error', 'High flow warning'.

The MLFB structure for FC330 systems must be filled to **this level**, including "**-Z**" options A.., B.., E.. and F.

	Order code
Add-on options and accessories	
Please add "**-Z**" to Article No. and specify Order code(s).	
Certificates	
Certificate EN 10204-2.2 confirmation of pressure containing material	**C01**
Certificate EN 10204-3.1 material (wetted parts)	**C02**
Material certificate EN 10204-3.2 with inspection	**C03**
Certificate NACE MR0175-2009 + MR0103-2012	**C04**
Certificate EN 10204-2.1 Declaration of compliance with the order	**C05**
Insp. Certificate EN 10204-3.1 for visual, dimensional and functional test	**C06**
Certificate EN 10204-3.1 PMI Positive material ident. of pressure-cont./wetted parts (confirmation only)	**C07**
Certificate EN 10204-3.1 P-test Pressure-test acc. AD2000	**C08**
Test pack (pressure test, non-destructive welding test, welder & welding procedure certificate)	**C09**
Certificate EN10204-3.1welding X-ray / Dye-penetration test of weldings (pressure cont.)	**C10**
Certificate EN10204-2.1 Declaration of accuracy	**C11**
Certificate EN10204-3.1 PMI Positive material ident. of pressure-cont./wetted parts (including heat analysis)	**C12**

	Order code
Add-on options and accessories	
Please add "**-Z**" to Article No. and specify Order code(s).	
Customer selected calibration	
DN 15 ... 50: Multi-point (5 flows × 1 pass) Flow 10 ... 100 % of Q_{norm}	**D60**
DN 15 ... 50: Multi-point (10 flows × 1 pass) Flow 10 ... 100 % of Q_{norm}	**D61**
DN 80: Multi-point (5 flows × 1 pass) Flow 10 ... 100 % of Q_{norm}	**D62**
DN 80: Multi-point (10 flows × 1 pass) Flow 10 ... 100 % of Q_{norm}	**D63**
DN 100: Multi-point (5 flows × 1 pass) Flow 10 ... 100 % of Q_{norm}	**D64**
DN 100: Multi-point (10 flows × 1 pass) Flow 10 ... 100 % of Q_{norm}	**D65**
DN 150: Multi-point (5 flows × 1 pass) Flow 10 ... 100 % of Q_{norm}	**D66**
DN 150: Multi-point (8 flows × 1 pass) Flow 10 ... 100 % of Q_{norm}	**D67**
Cable	
None	**L50**
5 m (16.4 ft), sensor cable, 4 wire, with 2 pcs M12 plugs mounted	**L51**
5 m (16.4 ft), sensor cable, 4 wire, without plugs for terminal connection	**L52**
10 m (32.8 ft), sensor cable, 4 wire, with 2 pcs M12 plugs mounted	**L55**
10 m (32.8 ft), sensor cable, 4 wire, without plugs for terminal connection	**L56**
25 m (82 ft), sensor cable, 4 wire, with 2 pcs M12 plugs mounted	**L59**
25 m (82 ft), sensor cable, 4 wire, without plugs for terminal connection	**L60**
50 m (164 ft), sensor cable, 4 wire, with 2 pcs M12 plugs mounted	**L63**
50 m (164 ft), sensor cable, 4 wire, without plugs for terminal connection	**L64**
75 m (246 ft), sensor cable, 4 wire, with 2 pcs M12 plugs mounted	**L67**
75 m (246 ft), sensor cable, 4 wire, without plugs for terminal connection	**L68**
Sensor options	
FCS300 marine approval (in preparation)	**S22**
SD-Card accessibility via USB	
(not allowed in USA by Patent)	
Mass storage enabled	**S30**
Additional data	
Please add "**-Z**" to Article No. and specify Order code(s) and plain text.	
Tag name	
Tag name plate, stainless steel	**Y17**

Operating instructions for SITRANS FC330

Description	Article No.
English	
• for firmware V 4.0 and onwards	**A5E44030648**
German	
• for firmware V 4.0 and onwards	**TBD**

All literature is available to download for free, in a range of languages, at

www.siemens.com/processinstrumentation/documentation

© Siemens 2021

SITRANS FC310 flowmeter system

Overview



The compact flowmeter SITRANS FC310 can be ordered for industrial, hygienic or NAMUR service.

Intended for integration into OEM skids, machines or pre-assembled plant systems, the flowmeter is based on the latest developments within digital signal processing technology - engineered for high measuring performance:

- Fast response to rapid changes in flow
- Fast dosing applications with control in host system
- High immunity against process noise
- High turndown ratio of flowrates
- Suitable for liquid and gas service
- Easy to install, commission and maintain

With all global marine approvals the FC310 is ideal for integration in ship fuel efficiency and environmental measurement systems as well as bunkering solutions.

The FCT010 transmitter delivers true multi-parameter measurements i.e. massflow, density, temperature.

FC310 is available with Modbus RTU (RS 485) multi-drop serial communication.

The flowmeter is supplied with SensorFlash, a micro SD card containing all relevant certificates. The SITRANS FC310 flowmeter system consists of a SITRANS FCS300 sensor and a SITRANS FCT010 transmitter always compact mounted.

Benefits

- It is compact and light, fitting neatly into dense piping arrangements
- Effective separation of measurement from plant vibration
- Reliable measurements due to high signal to noise ratio
- Short overall length; easy drop-in replacement into most existing installations
- Direct connection to host with high-speed Modbus simplifies machine or skid construction and set-up
- Modbus RS 485 RTU allows simple and easy integration with all Modbus masters with fast update rate of process values.

Technical specifications

Sizes	DN 15 (½") DN 25 (1") DN 50 (2") DN 80 (3") DN 100 (4") DN 150 (6")
Accuracy	± 0.10 % or ± 0.20 % Addional ± 0.40 % for gases
Repeatability	± 0.05 %
Flow range	
(water @ 1 bar pressure loss)	
• DN 15	4 500 kg/h (163.3 lb/min)
• DN 25	20 500 kg/h (753.2 lb/min)
• DN 50	49 000 kg/h (1 800 lb/min)
• DN 80	122 000 kg/h (4 483 lb/min)
• DN 100	273 000 kg/h (10 031 lb/min)
• DN 150	459 200 kg/h (16 873 lb/min)
Power supply	12-27 V DC; 1.1 W
Weight	4.6 ... 207 kg
Material	
• Sensor	
- Measuring tubes	316L stainless steel or nickel alloy C4
- Enclosure	304 stainless steel
• Transmitter	Aluminum with corrosion-resistant coating class C4
Enclosure rating	IP67
Pressure ratings	
• Measuring tubes	
- 316L	100 bar (1 450 psi)
- Nickel alloy C4	100 bar (1 450 psi)
• Sensor enclosure	No pressure containment
Temperature ratings	
• Process medium	-50 ... +205 °C (-58 ... +400 °F)
• Ambient	-40 ... +60 °C (-40 ... +140 °F)
Process connections	
• Flanges	EN 1092-1 B1, EN 1092-1 B2, EN 1092-1 D, ANSI/ASME B16.5, JIS B 2220
• Pipe threads	ASME B1.20 (NPT) female pipe thread, ISO 228-1 G female pipe thread (BSPP)
• Hygienic threads	DIN 11851, SMS 1145
• Hygienic clamps	DIN 32676 Hygenic Clamp Row A
Approvals	
• Hazardous area (zone 1)	ATEX, IECEx, EAC Ex, cCSAus, NEPSI, EAC No dust approval
• Pressure equipment	PED, CRN (in preparation)
• Hygienic	EHEDG (DN 25 ... 80) (in preparation)
• Marine	Germanischer Lloyd/det Norske Veritas, Bureau Veritas, Lloyds of London, American Bureau of Shipping, RINA (Italy)
NAMUR	NAMUR-compliant (e.g. NE 21, NE 41 and NE 132)
Communication	Modbus RS 485 RTU
EMC performance	
Emission	EN 55011/CISPR-11 (Class B)
Immunity	EN/IEC 61326-1 (Industry)
Mechanical load	18 ... 400 Hz random The flow meter will mechanically tolerate 3.17 g RMS in all directions. Flow accuracy cannot be guaranteed under all conditions.

© Siemens 2021

Selection and ordering data

	Article No. 7ME4631-					-					Ord. code	
SITRANS FC310 digital coriolis flowmeter with SITRANS FCS300 standard flow sensor with hygienic and flange/pipe thread connections and compact mounting with FCT010 transmitter												
↗ Click on the Article No. for the online configuration in the PIA Life Cycle Portal.												
Sensor size, connector size												
DN 15, DN 10 (½", 3/8")	3	F										
DN 15, DN 15 (½", ½")	3	G										
DN 15, DN 20 (½", ¾")	3	H										
DN 25, DN 20 (1", ¾")	3	K										
DN 25, DN 25 (1", 1")	3	L										
DN 25, DN 40 (1", 1½")	3	N										
DN 50, DN 40 (2", 1½")	4	B										
DN 50, DN 50 (2", 2")	4	C										
DN 50, DN 65 (2", 2½")	4	D										
DN 80, DN 65 (3", 2½")	4	J										
DN 80, DN 80 (3", 3")	4	K										
DN 80, DN 100 (3", 4")	4	L										
DN 100, DN 80 (4", 3")	5	M										
DN 100, DN 100 (4", 4")	5	N										
DN 100, DN 150 (4", 6")	5	Q										
DN 150, DN 100 (6", 4")	6	D										
DN 150, DN 150 (6", 6")	6	F										
DN 150, DN 200 (6", 8")	6	H										
Process connection												
EN 1092-1 B1, PN 16			A	0								
EN 1092-1 B1, PN 40			A	1								
EN 1092-1 B2, PN 63			A	2								
EN 1092-1 B2, PN 100			A	3								
EN 1092-1 D, PN 40			A	5								
ASME B16.5 RF, class 150			D	1								
ASME B16.5 RF, class 300			D	2								
ASME B16.5 RF, class 600			D	3								
ASME B16.5 RF, class 900 (p- and t-rating as class 600)			D	4								
ANSI B16.5-2009, class 1500 (p- and t-rating as class 600)			D	5								
ISO 228-1G female pipe thread			E	1								
ASME B1.20.1 NPT female pipe thread			E	3								
DIN 11851 hygienic screwed			F	1								
DIN 32676 hygienic clamp Row A			G	1								
SMS 1145 hygienic screwed			K	1								
JIS B2220/10K			L	2								
JIS B2220/20K			L	4								
EN 1092-1, PN 16, NAMUR length			N	1								
EN 1092-1, PN 40, NAMUR length			N	2								
Wetted parts material												
AISI 316L/1.4435/1.4404					1							
AISI 316L/1.4435/1.4404 (polished)					2							
Nickel alloy C4					3							

	Article No. 7ME4631-					-					Ord. code	
SITRANS FC310 digital coriolis flowmeter with SITRANS FCS300 standard flow sensor with hygienic and flange/pipe thread connections and compact mounting with FCT010 transmitter												
Calibration/Accuracy class												
0.2 % flow, 10 kg/m³ density							0					
0.1 % flow, 2 kg/m³ density							1					
Mounting style, transmitter housing and material												
Compact, IP67, aluminum								D				
Ex approval												
Non-Ex									A			
ATEX II 2G zone 1									C			
IECEx Gb (zone 1)									F			
US (cCSAus), Div 1									L			
Canada (cCSAus), class I, zone 1									M			
NEPSI									N			
INMETRO (in preparation)									P			
KCC (in preparation)									Q			
EAC									U			
Local User Interface												
Blind										1		

Selection and ordering data

	Order code
Further designs	
Please add "**-Z**" to Article No. and specify Order code(s).	
Cable glands	
None (replacement sensor)	**A00**
Metric, no glands	**A01**
Metric, plastic	**A02**
Metric, brass/Ni plated	**A05**
Metric, stainless steel	**A06**
NPT, no glands	**A11**
NPT, plastic	**A12**
NPT, brass/Ni plated	**A15**
NPT, stainless steel	**A16**
Metric thread with M12 socket fitted	**A20**
Sofware functions and CT approvals	
Standard	**B11**
I/O configuration Ch1	
Modbus RTU RS 485	**E14**
I/O configuration Ch2, Ch3 and Ch4	
None	**F00**
Add-on options and accessories	
Please add "**-Z**" to Article No. and specify Order code(s).	
Certificates	
Certificate EN 10204-2.2 confirmation of pressure containing material	**C01**
Certificate EN 10204-3.1 material (wetted parts)	**C02**
Material certificate EN 10204-3.2 with inspection	**C03**
Certificate NACE MR0175-2009 + MR0103-2012	**C04**
Certificate EN 10204-2.1 Declaration of compliance with the order	**C05**

© Siemens 2021

3

Selection and ordering data

	Order code
Add-on options and accessories	
Please add "**-Z**" to Article No. and specify Order code(s).	
Insp. Certificate EN 10204-3.1 for visual, dimensional and functional test	**C06**
Certificate EN 10204-3.1 PMI Positive material ident. of pressure-cont./wetted parts (confirmation only)	**C07**
Certificate EN 10204-3.1 P-test Pressure-test acc. AD2000	**C08**
Test pack (pressure test, non-destructive welding test, welder & welding procedure certificate)	**C09**
Certificate EN 10204-3.1 welding X-ray / Dye-penetration test of weldings (pressure cont.)	**C10**
Certificate EN 10204-2.1 Declaration of accuracy	**C11**
Certificate EN 10204-3.1 PMI Positive material ident. of pressure-cont./wetted parts (including heat analysis)	**C12**
Customer selected calibration	
DN 15 ... 50, multi-point, 5 flows × 1 pass Flow 10 ... 100 % of Q_{norm}	**D60**
DN 15 ... 50, multi-point, 10 flows × 1 pass Flow 10 ... 100 % of Q_{norm}	**D61**
DN 80, multi-point, 5 flows × 1 pass Flow 10 ... 100 % of Q_{norm}	**D62**
DN 80, multi-point, 10 flows × 1 pass Flow 10 ... 100 % of Q_{norm}	**D63**
DN 100, multi-point, 5 flows × 1 pass Flow 10 ... 100 % of Q_{norm}	**D64**
DN 100, multi-point, 10 flows × 1 pass Flow 10 ... 100 % of Q_{norm}	**D65**
DN 150, multi-point, 5 flows × 1 pass Flow 10 ... 100 % of Q_{norm}	**D66**
DN 150, multi-point, 8 flows × 1 pass Flow 10 ... 100 % of Q_{norm}	**D67**
Cable	
None	**L50**
5 m (16.4 ft), sensor cable, 4 wire, with 2 pcs M12 plugs mounted	**L51**
5 m (16.4 ft), sensor cable, 4 wire, without plugs for terminal connection	**L52**
5 m (16.4 ft), sensor cable, 4 wire, with 1 pc M12 plug mounted	**L53**
10 m (32.8 ft) sensor cable, 4 wire, with 2 pcs M12 plugs mounted	**L55**
10 m (32.8 ft), sensor cable, 4 wire, without plugs for terminal connection	**L56**
10 m (32.8 ft), sensor cable, 4 wire, with 1 pc M12 plug mounted	**L57**
25 m (82 ft), sensor cable, 4 wire, with 2 pcs M12 plugs mounted	**L59**
25 m (82 ft), sensor cable, 4 wire, without plugs for terminal connection	**L60**

	Order code
Add-on options and accessories	
Please add "**-Z**" to Article No. and specify Order code(s).	
25 m (82 ft), sensor cable, 4 wire, with 1 pc M12 plug mounted	**L61**
50 m (164 ft), sensor cable, 4 wire, with 2 pcs M12 plugs mounted	**L63**
50 m (164 ft), sensor cable, 4 wire, without plugs for terminal connection	**L64**
50 m (164 ft), sensor cable, 4 wire, with 1 pc M12 plug mounted	**L65**
75 m (246 ft), sensor cable, 4 wire, with 2 pcs M12 plugs mounted	**L67**
75 m (246 ft), sensor cable, 4 wire, without plugs for terminal connection	**L68**
75 m (246 ft), sensor cable, 4 wire, with 1 pc M12 plug mounted	**L69**
Sensor options	
FCS300 marine approval	**S22**
Additional data	
Please add "**-Z**" to Article No. and specify Order code(s) and plain text.	
Tag name	
Tag name plate, stainless steel	**Y17**

Operating instructions for SITRANS FC310

Description	Article No.
English	
• for firmware V 4.0 and onwards	**A5E44036384**
German	
• for firmware V 4.0 and onwards	**TBD**

All literature is available to download for free, in a range of languages, at

www.siemens.com/processinstrumentation/documentation

Accessories

Description	Article No.	
SITRANS I300 **Isolating power supply – Ex barrier**	**A5E39832532**	

© Siemens 2021

Overview



Full integration in the Siemens SIMATIC systems PCS7 or in TIA portal with FCT070 faceplates with the ET 200SP ST & HF powerful IO system for compact control cabinets. The complete flowmeter system consists of a SITRANS FCS300 sensor and a SIMATIC ET 200SP Coriolis module FCT070 transmitter.

The transmitter FCT070 offers real-time data processing and the display of all measuring and status data of the Coriolis flowmeter.

For hazardous area the FSC300 sensor can be placed in Ex Zone 1 or Class 1 Div 1 locations. Together with the SITRANS I300 power/barrier module the FCT070 transmitter can be place in Zone 2 or Div 2 areas.

Benefits

- FCS300 sensor in sizes from DN 15 to 150 mm in a large verity of process connections and wetted materials
- Short overall length; easy drop-in replacement into most existing installations
- Full hazardous area solutions
- Easy integration into automation process control as TIA portal and PCS7
- Easy selection and integration of flowmeters via TIA selector
- Cost effective integration of Coriolis flowmeters for PLC controlled machines
- SITRANS FCT070 ET 200SP technology module and can combined with all other SIMATIC ET200 ST & HF modules
- The FCT070 has all high-end transmitter functionality integrated including the advanged fraction tables on bord
- Fast and trouble-free communication between the flow meter and the PLC through digital data communication with up to 10 ms update rate
- Integrated advanced two-stage batch controller functionality without additional modules. I/Os are onboard

© Siemens 2021

Technical specifications

Sizes	DN 15 (½") DN 25 (1") DN 50 (2") DN 80 (3") DN 100 (4") DN 150 (6")
Accuracy	± 0.10 % or 0.20 % for liquids additional ± 0.40 for gases
Repeatability	± 0.05 %
Flow range (liquids)	
(water @ 1 bar pressure loss) (Q_{nom})	
• DN 15	4 500 kg/h (163.3 lb/min)
• DN 25	20 500 kg/h (753.2 lb/min)
• DN 50	49 000 kg/h (1 800 lb/min)
• DN 80	122 000 kg/h (4 483 lb/min)
• DN 100	273 000 kg/h (10 031 lb/min)
• DN 150	459 200 kg/h (16 873 lb/min)
Measurement of	Mass flow, volume flow, density, temperature, fraction A flow, fraction A %, fraction B flow, fraction B %
Architecture	Remote configuration
System integration	PCS7 and TIA portal with faceplates
Power supply	24 V DC, 19.2 ... 28.8 V
Material	
• Sensor	
• Wetted parts	316L stainless steel or nickel alloy C4
• Enclosure	304 stainless steel
• Transmitter	Aluminum with corrosion-resistant coating class C4
Enclosure rating	Sensor: IP67 FCT070 Transmitter: IP20
Pressure ratings	
• Measuring tubes	
• 316L	100 bar (1 450 psi)
• Nickel alloy C4	100 bar (1 450 psi)
• Sensor enclosure	No pressure containment
Temperature ratings	
• Process medium	-50 ... +205 °C (-58 ... +400 °F)
• Ambient	-40 ... +60 °C (-40 ... +140 °F)[1)]
• Display	-20 ... +60 °C (-4 ... +140 °F)
Process connections	
• Flanges	EN 1092-1 B1, EN 1092-1 B2, EN 1092-1 D, ANSI/ASME B16.5, JIS B 2220
• Pipe threads	ASME B1.20 (NPT) female pipe thread, ISO 228-1 G female pipe thread (BSPP)
• Hygienic threads	DIN 11851, SMS 1145
• Hygienic clamps	DIN 32676 hygenic clamp Row A

Approvals	
• Hazardous area	Sensor FCS300: Zone 1 & Class 1 Div 1 ATEX, IECEx, EAC Ex, CSA, cCSAus, NEPSI, EAC No dust approval FCT070 transmitter: Zone 2 & Class 1 Div 2 ATEX, IECEx, EAC Ex, CSA, cCSAus, FM, NEPSI, EAC
• Pressure equipment	PED, CRN
• Hygienic	EHEDG (DN 25 ... DN 80) (in preparation)
NAMUR	NAMUR-compliant (e.g. NE 21, NE 41, NE 107 and NE 132)
I/O	2 digital Input and 2 digital output Single and 2 stage batch function
Totalizer	3 totalizer
Communication	Integrated PROFINET for SIMATIC integration and other PROFINET Controllers
EMC performance	
Emission	EN 55011/CISPR-11 (Class A)
Immunity	EN/IEC 61326-1 (Industry)
Mechanical load	18 ... 1000 Hz random The flow meter will mechanically tolerate 3.17 g RMS in all directions. Flow accuracy cannot be guaranteed under all conditions.

© Siemens 2021

Selection and ordering data

Coriolis sensor SITRANS FCS300 with DSL ready for FCT070 trasmitter ↗	Article No. 7ME4637-											Ord. code
						-						
↗ Click on the Article No. for the online configuration in the PIA Life Cycle Portal.												
Sensor size, connector size												
DN 15, DN 10 (½", 3/8")	3	F										
DN 15, DN 15 (½", ½")	3	G										
DN 15, DN 20 (½", ¾")	3	H										
DN 25, DN 20 (1", ¾")	3	K										
DN 25, DN 25 (1", 1")	3	L										
DN 25, DN 40 (1", 1½")	3	N										
DN 50, DN 40 (2", 1½")	4	B										
DN 50, DN 50 (2", 2")	4	C										
DN 50, DN 65 (2", 2½")	4	D										
DN 80, DN 65 (3", 2½")	4	J										
DN 80, DN 80 (3", 3")	4	K										
DN 80, DN 100 (3", 4")	4	L										
DN 100, DN 80 (4", 3")	5	M										
DN 100, DN 100 (4", 4")	5	N										
DN 100, DN 150 (4", 6")	5	Q										
DN 150, DN 100 (6", 4")	6	D										
DN 150, DN 150 (6", 6")	6	F										
DN 150, DN 200 (6", 8")	6	H										
Process connection												
EN 1092-1 B1, PN 16			A	0								
EN 1092-1 B1, PN 40			A	1								
EN 1092-1 B2, PN 63			A	2								
EN 1092-1 B2, PN 100			A	3								
EN 1092-1 D, PN 40			A	5								
ASME B16.5 RF, Class 150			D	1								
ASME B16.5 RF, Class 300			D	2								
ASME B16.5 RF, Class 600			D	3								
ASME B16.5 RF, Class 900 (p- and t-rating as Class 600)			D	4								
ANSI B16.5-2009, Class 1500 (p- and t-rating as Class 600)			D	5								
ISO 228-1G female pipe thread			E	1								
ASME B1.20.1 NPT female pipe thread			E	3								
DIN 11851 hygienic screwed			F	1								
DIN 32676 hygienic clamp Row A			G	1								
SMS 1145 hygienic screwed			K	1								
JIS B2220/10K			L	2								
JIS B2220/20K			L	4								
EN 1092-1, PN 16, NAMUR length			N	1								
EN 1092-1, PN 40, NAMUR length			N	2								
Wetted parts material												
AISI 316L/1.4435/1.4404					1							
AISI 316L/1.4435/1.4404 (polished)					2							
Nickel alloy C4					3							

Coriolis sensor SITRANS FCS300 with DSL ready for FCT070 trasmitter	Article No. 7ME4637-											Ord. code
						-						
Calibration/Accuracy class												
0.2 % flow, 10 kg/m³ density							0					
0.1 % flow, 2 kg/m³ density							1					
Mounting style, transmitter housing and material												
Compac, IP67, aluminum								D				
Ex approval (sensor)												
Non-Ex									A			
ATEX II 2G zone 1									C			
IECEx Gb (zone 1)									F			
US (cCSAus), Div 1									L			
Canada (cCSAus), class I, zone 1									M			
NEPSI									N			
INMETRO									P			
KCC (in preparation)									Q			
EAC									U			
Local User Interface												
Blind										1		

Selection and ordering data

	Order code
Further designs Please add "**-Z**" to Article No. and specify Order code(s).	
Cable glands	
Metric, no glands	**A01**
Metric, plastic	**A02**
Metric, brass/Ni plated	**A05**
Metric, stainless steel	**A06**
NPT, no glands	**A11**
NPT, plastic	**A12**
NPT, brass/Ni plated	**A15**
NPT, stainless steel	**A16**
Metric thread with M12 socket fitted	**A20**
Sofware functions and CT approvals	
Standard software DSL	**B10**
I/O configuration Ch1	
No output channel (integration of FCT070)	**E00**
I/O configuration Ch2, Ch3 and Ch4	
None	**F00**

© Siemens 2021

SITRANS FCS300 with FCT070 transmitter

Selection and ordering data

	Order code
Add-on options and accessories	
Please add "**-Z**" to Article No. and specify Order code(s).	
Certificates	
Certificate EN 10204-2.2 confirmation of pressure containing material	**C01**
Certificate EN 10204-3.1 material (wetted parts)	**C02**
Material certificate EN 10204-3.2 with inspection	**C03**
Certificate NACE MR0175-2009 + MR0103-2012	**C04**
Certificate EN 10204-2.1 Declaration of compliance with the order	**C05**
Insp. Certificate EN 10204-3.1 for visual, dimensional and functional test	**C06**
Certificate EN 10204-3.1 PMI Positive material ident. of pressure-cont./wetted parts (confirmation only)	**C07**
Certificate EN 10204-3.1 P-test Pressure-test acc. AD2000	**C08**
Test pack (pressure test, non-destructive welding test, welder & welding procedure certificate)	**C09**
Certificate EN 10204-3.1 welding X-ray / Dye-penetration test of weldings (pressure cont.)	**C10**
Certificate EN 10204-2.1 Declaration of accuracy	**C11**
Certificate EN 10204-3.1 PMI Positive material ident. of pressure-cont./wetted parts (including heat analysis)	**C12**
Customer selected calibration	
DN 15 ... 50, multi-point, 5 flows × 1 pass Flow 10 ... 100% of Q_{norm}	**D60**
DN 15 ... 50, multi-point, 10 flows × 1 pass Flow 10 ... 100% of Q_{norm}	**D61**
DN 80, multi-point, 5 flows × 1 pass Flow 10 ... 100% of Q_{norm}	**D62**
DN 80, multi-point, 10 flows × 1 pass Flow 10 ... 100% of Q_{norm}	**D63**
DN 100, multi-point, 5 flows × 1 pass Flow 10 ... 100% of Q_{norm}	**D64**
DN 100, multi-point, 10 flows × 1 pass Flow 10 ... 100% of Q_{norm}	**D65**
DN 150, multi-point, 5 flows × 1 pass Flow 10 ... 100% of Q_{norm}	**D66**
DN 150, multi-point, 8 flows × 1 pass Flow 10 ... 100% of Q_{norm}	**D67**

	Order code
Add-on options and accessories	
Please add "**-Z**" to Article No. and specify Order code(s).	
Cable	
No sensor cable	**L50**
5 m (16.4 ft), sensor cable, 4 wire, without plugs for terminal connection	**L52**
5 m (16.4 ft), sensor cable, 4 wire, with 1 pcs M12 plugs mounted	**L53**
10 m (32.8 ft), standard, without plugs	**L56**
10 m (32.8 ft), sensor cable, 4 wire, with 1 pcs M12 plugs mounted	**L57**
25 m (82 ft), standard, without plugs	**L60**
25 m (82 ft), sensor cable, 4 wire, with 1 pcs M12 plugs mounted	**L61**
50 m (164 ft), standard, without plugs	**L64**
50 m (164 ft), sensor cable, 4 wire, with 1 pcs M12 plugs mounted	**L65**
75 m (246 ft), standard, without plugs	**L68**
75 m (246 ft), sensor cable, 4 wire, with 1 pcs M12 plugs mounted	**L69**
Additional data	
Please add "**-Z**" to Article No. and specify Order code(s) and plain text.	
Tag name	
Tag name plate, stainless steel	**Y17**

Description	Article No.	
SITRANS FCT070 Transmitter for ET 200SP	**7ME4138-6AA00-0BB1**	
BU20-P12+A0+4B, PU1 Baseunit plate for ET 200SP	**6ES7193-6BP20-0BB0** **6ES7193-6BP20-0BB1**	
SITRANS I300 Isolating power supply – Ex barrier	**A5E39832532**	

© Siemens 2021

Overview



The SITRANS FCS400 sensor is available in DN 15; DN 25 and DN 50 mm sizes in stainless steel AISI 316 L. The sensor design consists of process connections, inlet and outlet manifolds mounted in a stiff frame and two parallel tubes equally sharing the process medium flow.

The sensing tubes are curved in the CompactCurve shape which gives high sensitivity and low pressure loss. The CompactCurve shape was selected to ensure that the smallest flows are measured with optimal signal to noise ratio.

The super compact sensor design with a split flow dual tube design with very high driver frequency is suitable for high end applications in all industry segments e.g. Chemical, F&B , O&G and Power.

A variety of process connections available to cover all common process connections and pressure ratings.

The sensor has a solid stainless steel fully welded enclosure to protect the measuring tubes from any harsh environments. For hazardous area applications the FCS400 comes in a number of common harzardous area approved like ATEX, IECEx, cCSAus, EAC, and NEPSI.

For sanitary applications the sensor is available with polished inside wetted parts and carry the EHEDG and 3A sanitary certifications (in preparation).

For the chemical industry the FCS400 sensors are available with standardized NAMUR inbuilding length (in preparation).

Integration

The SITRANS FCS400 Massflow sensor is suitable for both indoor and outdoor installation and meets the requirements of Protection Class IP67/NEMA 4X. Optionally the sensor can be ordered with hazardous certification to Zone 1 + 21 (ATEX, IECEx, cCSAus, EAC Ex, NEPSI) or Class I + II + III Div. 1 (cCSAus).

The flowmeter is bidirectional and can be installed in any orientation. The sensor is self-draining in many positions, with vertical mounting preferred.

It is important to ensure that the sensor tubes are always completely filled with homogeneous fluid; otherwise measuring errors may occur. Suitable fluids are clean liquids, pastes, light slurries or gases. Condensing vapours, aerated liquids or slush are not recommended.

The materials in contact with the process medium must be evaluated for corrosion and erosion resistances for long sensor life.

The pressure drop through the sensor is a function of the properties of the fluid and the flow rate. A pressure loss and accuracy calculator can be found on the Siemens Internet site https://www.siemens.com/fc430/sizer

The preferred flow direction is indicated by an arrow on the sensor. Flow in the direction of the arrow will be measured as positive. The flow direction can be adjusted at the transmitter to compensate for reverse installation.

Installation orientation

The optimal installation orientation is vertical with the flow upwards. This ensures that suspended solids or bubbles are completely pushed through the sensor. A drain valve below the sensor will allow the pipe and sensor to drain completely.

Supports

In order to support the weight of the flowmeter and to ensure reliable measurements when external effects exist (e.g. plant vibrations), the sensor should be installed in rigidly supported pipelines.

Supports or hangers should be installed symmetrically and stress-free in close proximity to both of the process connections.

Shut-off devices

To conduct a system zero adjustment, secure shut-off devices are required in the pipeline.

Where possible, shut-off devices should be installed both upstream and downstream of the flowmeter.

© Siemens 2021

Configuration

Installation guidelines

- The mass flowmeter does not require any flow conditioning or straight inlet pipe sections. Care should be exercised however to ensure that any upstream valves, gates, sight glasses etc. do not cavitate and are not set into vibration by the flow.
- It is always preferred to place the flowmeter upstream of any control valve or other pipeline component which may cause flashing, cavitation or vibrations.
- The presence of gas bubbles in the fluid may result in erroneous measurements, particularly in the density measurement. Therefore the flowmeter should not be installed at the lowest pressure point in the liquid piping system or where vapour can collect. Install the meter in pipeline sections with high pressure to maintain system pressure and compress any bubbles.
- Drop lines downstream from the flow sensor should be avoided to prevent the meter tube from draining during flowing conditions. A back-pressure device or orifice is recommended to ensure that flow does not separate within the flow sensor but the metering section remains at positive pressure at all times while there is flow.
- The flowmeter should not come into contact with any other objects. Avoid making attachments to the housing except for the pressure guard components (if required).
- When the connecting pipeline is larger than the sensor size, suitable standard reducers may be installed. A selection of oversize and undersize connections can be ordered - refer to the sizes tables below.
- The flow sensor may be supported at the junction between process connection and the manifold, but should not be used to support adjacent piping. Ensure that the piping is also supported on both sides so that connection stresses are neutral.
- If strong vibrations exist in the pipeline, they should be damped using elastic pipeline elements. The damping devices must be installed outside the supported flowmeter section. Direct connection of flexible elements to the sensor should be avoided.
- Make sure that any dissolved gases, which are present in many liquids, do not outgas. The back pressure at the outlet should be at least 0.2 bar (3 psi) above the vapour pressure of the process fluid.
- Assure that operation below the vapour pressure cannot occur particularly for fluids with low latent heat of vaporisation.
- The sensor should not be installed in the vicinity of strong electromagnetic fields, e.g. near motors, pumps, variable frequency drives, transformers etc.
- When operating meters on a common mounting base the sensors should be mounted and spaced separate from each other to avoid cross-talk and other vibration interferences.
- When operating meters in interconnected pipelines the pipes should be decoupled to prevent cross talk.

Remote system cabling

The system is designed so that standard instrumentation cable with four cores and overall screen or two screened pairs can be used, or cable sets can be ordered with the flowmeter. The cable can be ordered in various set lengths and terminated in the field.

Be aware of maximum sensor length cable depending on product selection, currently 75 m. Data transmission speed and process variable update rates may be affected by the cable characteristics. For best results, choose a cable with the following electrical characteristics:

Property	Unit	Value
Resistance	[Ω/km]	59
Characteristic impedance	[Ω]	100 @ 1 MHz
Insulation resistance	[MΩ/km]	200
Maximum voltage	[V]	300

The flowmeter system applies maximum 15 V DC in operation and is certified intrinsically safe. The complete system is insulation tested to 1 500 V in production.

Cabling solutions which can be ordered with the flowmeter are as follows:

1. High performance plugged cable using M12 connectors into prepared sockets
2. Cable glands for either metric or NPT threaded terminal housings.
3. Plain cable in set lengths to be passed through flexible and rigid conduit (not supplied) for metric or NPT threaded terminal housings

Cable for items 1, 2 and 3 are available either gray for standard applications or light blue for Ex applications to identify the circuit as intrinsically safe.

Insulation and heating

For applications where pipeline insulation is required for personnel protection or process temperature maintenance, the SITRANS FCS400 flow sensor may also be insulated. The form and material of insulation is not prescribed and entirely depends on the practices at the application location or plant.

Insulation must not be crowded around the sensor pedestal but shaped at a 45° cone to allow the pedestal to radiate excess heat and maintain a suitable working temperature within the front-end housing.

Where trace heating is employed, an electric heating jacket can be ordered as an accessory. It is shaped to the sensor body and controlled from a weatherproof setpoint device.

The jacket can heat the sensor enclosure up to 200 °C (392 °F). However the maximum temperature increase is limited to 70 °C. Further insulation is also recommended for personnel protection or low loss temperature maintenance.

© Siemens 2021

Technical specifications

Flow sensor FCS400		
Parameter	**Unit**	**Value**
Process media		• Fluid Group 1 (suitable for dangerous fluids) • Aggregate state: Paste/light slurry, liquid and gas
Process pressure range	[barg (psi)]	316L: 0 ... 100 (0 ... 1 450)
Process temperature range • DN 15 ... DN 50	[°C (°F)]	-50 ... +200 (-58 ... +392)
Ambient temperature range	[°C (°F)]	-40 ... +60 (-40 ... +140)
Transport temperature range	[°C (°F)]	-40 … +70 (-40 … +158)
Density range	[kg/m^3 (lb/ft^3)]	1 … 5 000 (0.062 … 312.2)
No. of process values • Primary process values		• Mass flow • Density • Process medium temperature
• Derieved process values		• Volume flow • Standard volume flow (with reference density) • Fraction A:B • Fraction % A:B

Performance specifications		**Sensor**		
Parameter	**Unit**	**DN 15**	**DN 25**	**DN 50**
Max. zero point error	[kg/h (lb/min)]	0.2 (0.007)	2 (0.8)	7.5 (0.27)
Q_{min} (1 % error)[1)]	[kg/h (lb/min)]	20 (0.735)	240 (8.92)	800 (29.4)
Q_{nom} (1 bar pressure)[1)]	[kg/h (lb/min)]	3 700 (136)	20 500 (753.2)	49 000 (1 800)
Q_{max}[1)]	[kg/h (lb/min)]	6 400 (235.2)	35 000 (1 286)	90 000 (3 307)
Linearity error mass flow • for liquids[2)]	[%]	± 0.1	± 0.1	± 0.1
• for gases	[%]	± 0.35	± 0.35	± 0.35
Repeatability mass flow	[%]	± 0.05	± 0.05	± 0.05
Density accuracy standard calibration[3)]	[kg/m^3 (lb/ft^3)]	± 5 (± 0.31)	± 5 (± 0.31)	± 5 (± 0.31)
Density accuracy extended calibration[3)]	[kg/m^3 (lb/ft^3)]	± 0.5 (± 0.031)	± 0.5 (± 0.031)	± 0.5 (± 0.031)
Temperature error	[°C (°F)]	± 0.5 (± 0.9)	± 0.5 (± 0.9)	± 0.5 (± 0.9)

1) For gas applications the max. flowrate is calculated at Mach-Number = 03.

2) Increased error can be expected for gas mass flow measurement.

3) Liquid only.

Pressure/temperature curves

With two major exceptions, the pressure rating of the flow sensors is independent of the process medium temperature. Design rules for flange connections in both the EN 1092-1 and ASME B16.5 standards dictate pressure derating with increasing temperature. The charts below show the effect of process medium temperature on the pressure ratings for the flanges within the FCS400.

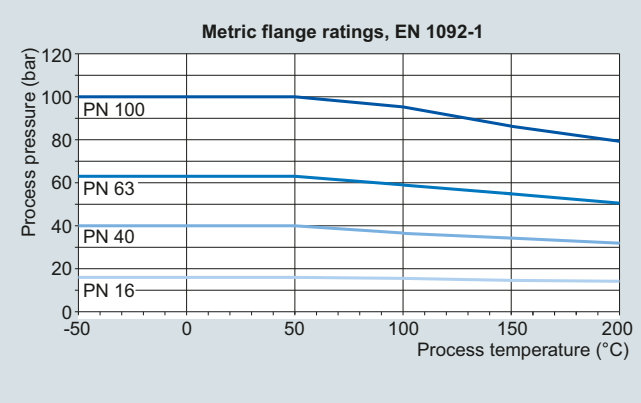

EN 1092-1 flanged sensors

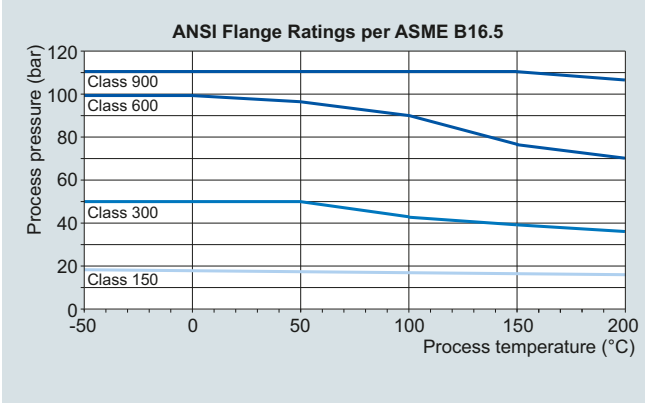

ASME B16.5 flanged sensors

© Siemens 2021

3

Technical specifications (continued)

Sensor variants

SITRANS FCS400 sensors are available in a wide range of process connections. The available combinations of type, sensor size and connection size are shown in the tables below.

Standard sensors

Sensor	Connection	EN 1092-1 B1, PN 16	EN 1092-1 B1, PN 40	EN 1092-1 B1, PN 63	EN 1092-1 B1, PN 100	EN 1092-1 B1, PN 160[2]	EN 1092-1 D Nut, PN 40	EN 1092-1 D Nut, PN 63	EN 1092-1 D Nut, PN 100	EN 1092-1 D Nut, PN 160[2]	ANSI B16.5-2009, class 150	ANSI B16.5-2009, class 300	ANSI B16.5-2009, class 600	ANSI B16.5-2009, class 900[1]	ISO 228-1 G pipe thread	ASME B1.20.1 NPT pipe thread	DIN 11851 hygienic screwed	DIN 32676 hygienic tri-clamp	DIN 11864-1A aseptic screwed	DIN 11864-2A aseptic flanged	DIN 11864-3A aseptic clamp	ISO 2852 hygienic clamped	ISO 2853 hygienic screwed	SMS 1145 hygienic screwed	12-VCO-4 quick connect	JIS B2220:2004/10K	JIS B2220:2004/20K	JIS B2220:2004/40K	JIS B2220:2004/63K
Standard: 7ME461.-...																													
DN 15 (½")	DN 6 (¼")														●	●													
	DN 10 (3/8")																●												
	DN 15 (½")	●	●	●	●	●	●	●	●	●	●	●	●	●	●	●	●	●	●	●	●				●	●	●	●	●
	DN 20 (¾")		●								●	●	●					●											
	DN 25 (1")	●	●		●												●					●	●	●					
DN 25 (1")	DN 15 (½")																												
	DN 25 (1")	●	●	●	●	●	●	●	●	●	●	●	●	●	●	●	●	●	●	●	●	●	●	●		●	●	●	●
	DN 32 (1¼")		●														●												
	DN 40 (1½")	●	●		●						●	●	●					●					●	●						
DN 50 (2")	DN 25 (1")																												
	DN 40 (1½")	●	●	●	●	●	●	●									●		●	●	●	●	●	●					
	DN 50 (2")	●	●	●	●	●	●	●	●	●	●	●	●	●	●	●	●	●	●	●	●	●	●	●		●	●	●	●

[1] Apply class 600 p and t ratings for class 900 and class 1500 flanges.
[2] P and T rating as PN 100.

Hygienic sensor variants (in preparation)

The hygienic sensors all have polished internal wetted material and a maximum internal surface roughness Ra < 0.8 µm and are EHEDG and 3A approved.

Aseptic flanged process connections

The aseptic flanges offered for FCS400 conform with the standard DIN 11864-2A BF-A. The flange fitted to the sensor is therefore the back flange and the seal is an O-ring.

The flange dimensions in the FCS400 program are as follows:

Size DN	Pipe	Bore d_1	Ring OD d_{11}	Bolt circle d_5	Bolt holes	Flange diameter d_{10}
10	13 × 1.5	10	22.4	37	4 × Ø9	54
15	19 × 1.5	16	28.4	42	4 × Ø9	59
20	23 × 1.5	20	32.4	47	4 × Ø9	64
25	29 × 1.5	26	38.4	53	4 × Ø9	70
32	35 × 1.5	32	47.7	59	4 × Ø9	76
40	41 × 1.5	38	53.7	65	4 × Ø9	82
50	53 × 1.5	50	65.7	77	4 × Ø9	94
65	70 × 2.0	66	81.7	95	8 × Ø9	107
80	85 × 2.0	81	97.7	112	8 × Ø11	113

DIN 11864-2A BF-A flange dimensions

© Siemens 2021

Dimensional drawings

Sensor dimensions

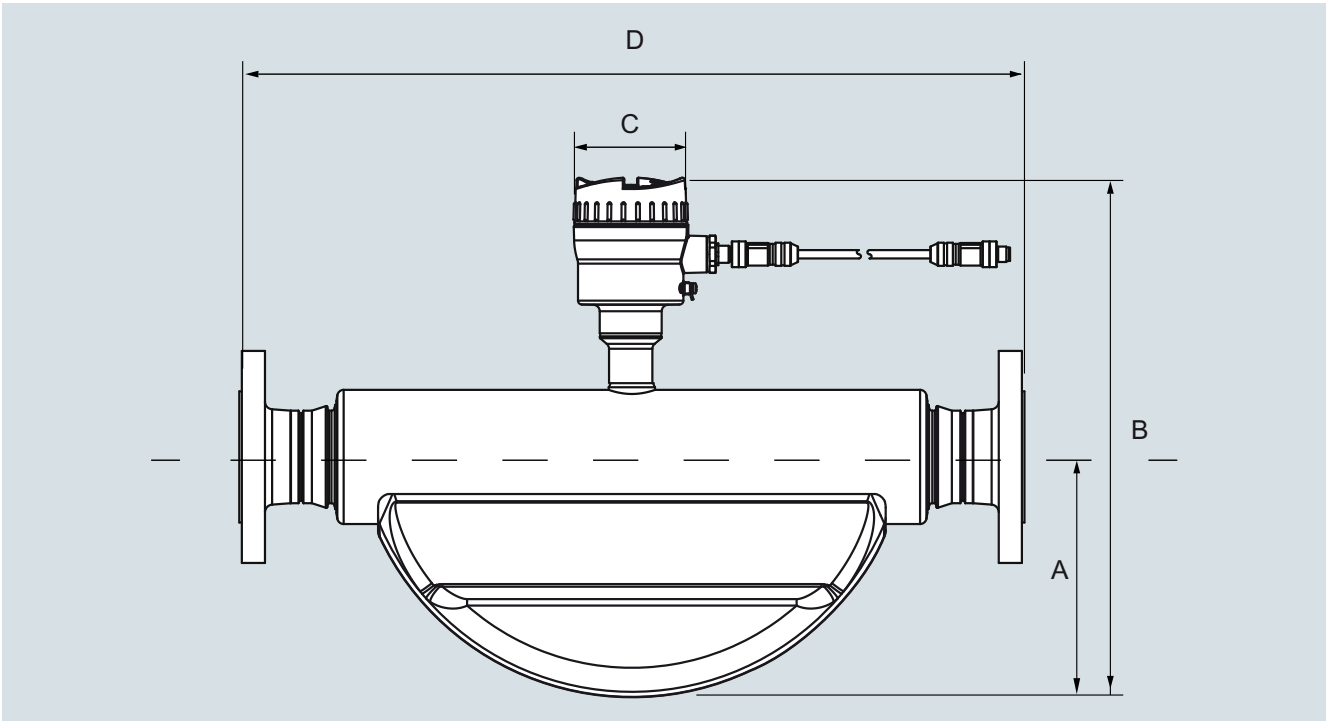

Sensor		A		B		B1		Weight[1]	
[DN]	[inch]	[mm]	[inch]	[mm]	[inch]	[mm]	[inch]	[kg]	[lb]
15	½	90	3.54	280	11.0	314	12.4	4.6	10.1
25	1	123	4.84	315	12.4	349	13.8	7.9	17.4
50	2	187	7.36	390	15.4	424	16.8	25.7	56.7

SITRANS FCS400, dimensions in mm (inch), weights in kg (lb), for a EN 1092 PN 40 flanged version.

The built-in length D depends on the flange.

1) For FCT030 compact add 4 kg (8.8 lb)

Overall length

The overall length (built-in length (D)) of each sensor depends on the connection standard and the pressure rating. The tables below summarize the dimensions available at the time of publishing. Please contact Siemens for further information about our desired process connection specification.

© Siemens 2021

Dimensional drawings (continued)

Standard: 7ME461.-...

Sensor	DN 15 (½")					DN 25 (1")			DN 50 (2")	
Connection	**DN 6 (¼")**	**DN 10 (3/8")**	**DN 15 (½")**	**DN 20 (¾")**	**DN 25 (1")**	**DN 25 (1")**	**DN 32 (1¼")**	**DN 40 (1½")**	**DN 40 (1½")**	**DN 50 (2")**
EN 1092-1 B1, PN 16			265		265	360			610	610
EN 1092-1 B1, PN 40			265		265	360		365	610	610
EN 1092-1 B1, PN 63			265			360			610	610
EN 1092-1 B1, PN 100			270		275	360			610	610
EN 1092-1 B1, PN 160			270			360				620
ANSI B16.5, class 150			270	270		360		365		620
ANSI B16.5, class 300			270	270		360		380		620
ANSI B16.5, class 600			270	285		360		380		620
ANSI B16.5, class 900			290			385				620
ISO 228-1 GH pipe thread	265		265			365				620
ANSI B1.20.1 NPT pipe thread	265		270			365				620
DIN 11851 hygienic screwed[1)]		265	265		193	360	360		610	610
DIN 32676-C hygienic tri-clamp			265	265		360		360		610
DIN 11864-1 aseptic screwed[1)]			265			360			610	610
DIN 11864-2 aseptic flange[1)]			265			360			620	610
DIN 11864-3 aseptic clamp[1)]			265			360			610	610
ISO 2852 hygienic clamp[1)]					265	360			610	610
ISO 2853 hygienic screwed[1)]			265			360		274		610
SMS 1145 hygienic screwed			285			360			610	610
12-VCO-4 quick connect			285							
JIS B2220/10K			265			360			620	610
JIS B2220/20K			265			360			620	610
JIS B2220/40K			270			360			620	610
JIS B2220/63K			275			370				620

[1)] Available with 3A and EHEDG certification.

Sensor	DN 15 (½")					DN 25 (1")			DN 50 (2")	
Connection	**DN 6 (¼")**	**DN 10 (3/8")**	**DN 15 (½")**	**DN 20 (¾")**	**DN 25 (1")**	**DN 25 (1")**	**DN 32 (1¼")**	**DN 40 (1½")**	**DN 40 (1½")**	**DN 50 (2")**
EN 1092-1 B1, PN 16			10.43		10.43	14.17			24.02	24.02
EN 1092-1 B1, PN 40			10.43		10.43	14.17		14.37	24.02	24.02
EN 1092-1 B1, PN 63			10.43			14.17			24.02	24.02
EN 1092-1 B1, PN 100			10.63		10.83	14.17			24.02	24.02
EN 1092-1 B1, PN 160			10.63			14.17				24.41
ANSI B16.5, class 150			10.63	10.63		14.17		14.37		24.41
ANSI B16.5, class 300			10.63	10.63		14.17		14.96		24.41
ANSI B16.5, class 600			10.63	11.22		14.17		14.96		24.41
ANSI B16.5, class 900			11.4			15.2				24.41
ISO 228-1 GH pipe thread	10.43		10.43			14.37				24.41
ANSI B1.20.1 NPT pipe thread	10.43		10.63			14.37				24.41
DIN 11851 hygienic screwed[1)]		10.43	10.43		7.60	14.17	14.17		24.02	24.02
DIN 32676-C hygienic tri-clamp			10.43	10.43		14.17		14.17		24.02
DIN 11864-1 aseptic screwed[1)]			10.43	10.43		14.17				24.02
DIN 11864-2 aseptic flange[1)]			10.43	10.43		14.17		10.78	24.41	24.02
DIN 11864-3 aseptic clamp[1)]			10.43			14.17			24.02	24.02
ISO 2852 hygienic clamp[1)]					10.43	14.17			24.02	24.02
ISO 2853 hygienic screwed[1)]			10.43			14.17		10.78		24.02
SMS 1145 hygienic screwed			10.43			14.17			24.02	24.02
12-VCO-4 quick connect			11.2							
JIS B2220/10K			10.4			14.2			24.4	24.0
JIS B2220/20K			10.4			14.2			24.4	24.0
JIS B2220/40K			10.6			14.2			24.4	24.0
JIS B2220/63K			10.8			14.6				24.4

[1)] Available with 3A and EHEDG certification.

SITRANS FCS400, overall length (D), dimensions in mm.

© Siemens 2021

Overview



The complete flowmeter system SITRANS FC consist of a new FCS400 sensor in sizes DN 15 to DN 50 mm and a FCT030 multichannel/multifunctional in compact or remote versions. The flowmeter is based on the latest developments within digital signal processing technology – engineered for high measuring performance:

- Fast response to rapid changes in flow
- Fast dosing applications
- High immunity against process noise
- High turndown ratio of flowrates
- Suitable for liquid and gas service
- Easy to install, commission and maintain
- Aerated flow filtering system, for advanced filtering of fluids with gas or air bubbles
- Build in Data logger for all process variables and status messages (FCT030)
- Build in Batch functionality (FCT030)

The SITRANS FC430 is available with current output HART 7.5, Modbus RS 485 RTU, PROFIBUS DP or PROFIBUS PA as standard on Channel 1. Additional I/O functions can be freely configured for analog, pulse, frequency, relay or status output, or binary input.

The transmitter comes with a user configurable graphical display and SensorFlash, a micro SD card for configuration backup, firmware update and data storage.

Benefits

- It is truely compact and light, fitting neatly into dense piping arrangements
- Easy maintenance because modules can be exchanged rapidly
- Effective separation of measurement from plant vibration
- Highly secure operation in safety critical applications
- Non-volatile memory of all setup and operation data
- Reliable measurements due to high signal to noise ratio
- Secure, digital transfer of measurement data from the sensor
- Shortest overall length; easy drop-in replacement into most existing installations
- Marine Application: fuel management & consumption; bunkering solutions; boiler control

Technical specifications

SITRANS FC430	
Sizes	DN 15 (½") DN 25 (1") DN 50 (2")
Accuracy	± 0.10 %
Repeatability	± 0.05 %
Flow range (liquids)	
Q_{nom} (water @ 1 bar pressure loss)	
• DN 15 (½")	3 700 kg/h (8 157 lb/h)
• DN 25 (1")	11 500 kg/h (25 353 lb/h)
• DN 50 (2")	52 000 kg/h (114 640 lb/h)
Architecture	Compact or remote configuration
Display	Full graphical display, 240 × 160 pixels with selection of 6 languages
Power supply	20 ... 90 V DC ± 10 %; 100 ... 240 V AC ± 10 %, 47 ... 63 Hz ± 10 %
Materials	
• Sensor	
- Wetted parts	316L stainless steel
- Enclosure	304 stainless steel
• Transmitter	Aluminum with corrosion-resistant coating class C4
Enclosure rating	IP67[1)]
Pressure ratings	
• Measuring tubes	
- 316L	100 bar (1 450 psi)
- Sensore enclosure	20 bar (DN 15, DN 25) 17 bar (DN 50)
• Sensor enclosure burst pressure	>160 bar (depending on size)
Temperature ratings	
• Process medium	
- DN 15 ... DN 50	-50 ... +200 °C (-58 ... +392 °F)
• Ambient	-40 ... +60 °C (-40 ... +140 °F)[1)]
• Display	-20 ... +60 °C (-4 ... +140 °F)
Process connections	
• Flanges	EN 1092-1 B1, EN 1092-1 D, ANSI/ASME B16.5, JIS B 2220, DIN 11864-2
• Pipe threads	ASME B1.20 (NPT), ISO 228-1 G (BSPP), VCO Quick-connect
• Hygienic threads	DIN 11851, DIN 11864-1A, ISO 2853, SMS 1145
• Hygienic clamps	DIN 11864-3A, DIN 32676-C Triclamp, ISO 2852
Approvals	
• Hazardous area	ATEX, IECEx, EAC Ex, NEPSI, CSA, cCSA us
• Pressure equipment	PED, CRN
• Hygienic (in preparation)	3A, EHEDG
NAMUR	NAMUR-compliant (e.g. NE 21, NE 41, NE 107 and NE 132)
I/O	Up to 4 channels combining ana- log, relay or digital outputs and binary input
Communication	HART PROFIBUS PA PROFIBUS DP Modbus RTU (RS 485)
EMC performance	
• Emission	EN 55011/CISPR-11 (Class A)
• Immunity	EN/IEC 61326-1 (Industry)
Mechanical load	18 ... 400 Hz random The flow meter will mechanically tolerate 3.17 g RMS in all directions. Flow accuracy cannot be guaranteed under all conditions.

[1)] If operating outdoors, avoid direct sunlight, paritcularly in warm climatic regions.

© Siemens 2021

SITRANS FC430 flowmeter for OEM customers

Selection and ordering data

	Article No. 7ME4613-	Ord. code
SITRANS FC430 digital coriolis flowmeter with SITRANS FCS400 standard flow sensor compact or remote mounting with FCT030 transmitter		
↗ Click on the Article No. for the online configuration in the PIA Life Cycle Portal.		
Sensor size, connector size		
DN 15, DN 6 (½", ¼")	3 E	
DN 15, DN 10 (½", 3/8")	3 F	
DN 15, DN 15 (½", ½")	3 G	
DN 15, DN 20 (½", ¾")	3 H	
DN 15, DN 25 (½", 1")	3 J	
DN 25, DN 25 (1", 1")	3 L	
DN 25, DN 32 (1", 1¼")	3 M	
DN 25, DN 40 (1", 1½")	3 N	
DN 50, DN 40 (2", 1½")	4 B	
DN 50, DN 50 (2", 2")	4 C	
DN 50, DN 65 (2", 2½")	4 D	
Process connection		
EN 1092-1 B1, PN 16	A 0	
EN 1092-1 B1, PN 40	A 1	
EN 1092-1 B1, PN 63	A 2	
EN 1092-1 B1, PN 100	A 3	
EN 1092-1 D, PN 40	A 5	
EN 1092-1 D, PN 63	A 6	
EN 1092-1 D, PN 100	A 7	
EN 1092-1 D, PN 160 (max operation pressure 100 bar)	A 8	
ASME B16.5 RF, Class 150	D 1	
ASME B16.5 RF, lass 300	D 2	
ASME B16.5 RF, lass 600	D 3	
ASME B16.5 RF, Class 900 (p- and t-rating as Class 600)	D 4	
ISO 228-1G female pipe thread	E 1	
ASME B1.20.1 NPT female pipe thread	E 3	
DIN 11851 hygienic screwed	F 1	
DIN 32676, ASME, Form C (inch) (tri-clamp)	G 1	
DIN 11864-1 GS Form A Row A, Form A = O-ring type hygienic, aseptic thread connector, hygienic class H3	H 1	
DIN 11864-2 BF Form A Row A, Form A = O-ring type hygienic, aseptic flange connector, hygienic class H3	H 2	
DIN 11864-3 BKS Form A Row A, Form A = O-ring type hygienic, aseptic clamp connector, hygienic class H3	H 3	
ISO 2852 hygienic clamp	J 1	
ISO 2853 hygienic thread	J 2	
SMS 1145 hygienic screwed	K 1	
Quick connect	K 5	
JIS B2220/10K	L 2	
JIS B2220/20K	L 4	
JIS B2220/40K	L 6	
JIS B2220/63K	L 7	

	Article No. 7ME4613-	Ord. code
SITRANS FC430 digital coriolis flowmeter with SITRANS FCS400 standard flow sensor compact or remote mounting with FCT030 transmitter		
Wetted parts material		
AISI 316L/1.4435/1.4404	1	
AISI 316L/1.4435/1.4404 (polished; EHEDG; 3A) (in preparation)	2	
Calibration/Accuracy class		
0.1 % flow, 5 kg/m³ density	1	
0.1 % flow, 0.5 kg/m³ density	4	
Standard fraction (with density 0.5 kg/m³)	8	
Mounting style, transmitter housing and material		
None (replacement sensor)	A	
Compact, IP67 fieldmount, aluminum	D	
Remote, IP67 fieldmount, aluminum, M12	G	
Remote, IP67 fieldmount, aluminum, T/Box	K	
Remote, IP67, wall mount, aluminium	U	
Ex approval (depending on variant)		
Non-Ex	A	
ATEX (zone 1 / zone 21)	C	
IECEx (zone 1 / zone 21)	F	
US (cCSAus), Div 1	L	
Canada (cCSAus), zone 1	M	
NEPSI	N	
INMETRO (in preparation)	P	
KCC (in preparation)	Q	
EAC	U	
Local User Interface		
None (replacement sensor, DSL only)	0	
Blind	1	
Graphical, 240 × 160 pxl	3	

© Siemens 2021

Selection and ordering data

	Order code
Further designs	
Please add "**-Z**" to Article No. and specify Order code(s).	
Cable glands	
None (replacement sensor)	**A00**
Metric, no glands	**A01**
Metric, nylon, limited to -20 °C/-4 °F	**A02**
Metric, brass/Ni plated	**A05**
Metric, stainless steel	**A06**
NPT, no glands	**A11**
NPT, nylon, limited to -20 °C/-4 °F	**A12**
NPT, brass/Ni plated	**A15**
NPT, stainless steel	**A16**
Metric thread with M12 socket fitted	**A20**
Sofware functions and CT approvals	
None (replacement sensor)	**B10**
Standard	**B11**
I/O configuration Ch1	
No output channel	**E00**
4 ... 20 mA HART Active/Passive (non-Ex)	**E02**
Ca 4 ... 20 mA HART active (Ex)	**E06**
Ca 4 ... 20 mA HART passive (Ex)	**E07**
PROFIBUS PA	**E10**
PROFIBUS DP (non-Ex)	**E11**
Modbus RTU RS 485	**E14**
I/O configuration Ch2, Ch3 and Ch4	
None	**F00**
• Non Ex: Sig O, None, None	**F01**
• Non Ex: Sig O, Sig I/O, None	**F02**
• Non Ex: Sig O, Sig I/O, Sig I/O	**F03**
• Non Ex: Sig O, Sig I/O, R	**F04**
• Non Ex: Sig O, R, R	**F05**
• Non Ex: Sig O, R, None	**F06**
• Ex: pSig O, None, None	**F11**
• Ex: pSig O, pSig I/O, None	**F12**
• Ex: pSig O, pSig I/O, pSig I/O	**F13**
• Ex: pSig O, pSig I/O, R	**F14**
• Ex: pSig O, R, R	**F15**
• Ex: pSig O, R, None	**F16**
• Ex: aSig O, None, None	**F21**
• Ex: aSig O, aSig I/O, None	**F22**
• Ex: aSig O, aSig I/O, aSig I/O	**F23**
• Ex: aSig O, aSig I/O, R	**F24**
• Ex: aSig O, R, R	**F25**
• Ex: aSig O, R, None	**F26**

Notes on I/O configurations:

a or p suffix: The I/O module is selected at ordering with either active or passive function.

Signal: The output can be selected for Current (0 or 4 to 20 mA), frequency or pulse function in the menu.

I: Discrete status input to the flowmeter. Functions are selected in the menu including 'Freeze output', 'Reset totalizer' (only CH3&4).

R: Relay output for discrete status reporting. Function is selected in the menu, including 'Error', 'High flow warning'.

The MLFB structure for FC330 systems must be filled to **this level**, including "**-Z**" options A.., B.., E.. and F.

	Order code
Add-on options and accessories	
Please add "**-Z**" to Article No. and specify Order code(s).	
Certificates	
Pressure testing certificate CRN	**C01**
Pressure testing certificate PED	**C02**
Material certificate EN 10204-3.1 (wetted parts)	**C05**
Welding inspection certificate	**C07**
Factory certificate EN 10204 2.1	**C10**
Factory certificate EN 10204 2.2	**C11**
Cleaned for oil and grease	**C50**
Customer selected calibration	
Multi-point (5 flows × 2 pass) Flow 10 ... 100 % of Q_{norm}	**Y60**
Multi-point (10 flows × 1 pass) Flow 10 ... 100 % of Q_{norm}	**Y61**
Multi-point calibration (5 flows × 2 pass) Flow 2 ... 20 % of Q_{norm}	**Y69**
Multi-point calibration (5 flows × 2 pass) Flow 5 ... 50 % of Q_{norm}	**Y71**
Multi-point calibration (10 flows × 1 pass) Flow 2 ... 20 % of Q_{norm}	**Y72**
Multi-point calibration (10 flows × 1 pass) Flow 5 ... 50 % of Q_{norm}	**Y73**
Cable	
None	**L50**
5 m (16.4 ft), sensor cable, 4 wire, with 2 pcs M12 plugs mounted	**L51**
5 m (16.4 ft), sensor cable, 4 wire, without plugs for terminal connection	**L52**
10 m (32.8 ft), sensor cable, 4 wire, with 2 pcs M12 plugs mounted	**L55**
10 m (32.8 ft), sensor cable, 4 wire, without plugs for terminal connection	**L56**
25 m (82 ft), sensor cable, 4 wire, with 2 pcs M12 plugs mounted	**L59**
25 m (82 ft), sensor cable, 4 wire, without plugs for terminal connection	**L60**
50 m (164 ft), sensor cable, 4 wire, with 2 pcs M12 plugs mounted	**L63**
50 m (164 ft), sensor cable, 4 wire, without plugs for terminal connection	**L64**
75 m (246 ft), sensor cable, 4 wire, with 2 pcs M12 plugs mounted	**L67**
75 m (246 ft), sensor cable, 4 wire, without plugs for terminal connection	**L68**
Sensor options	
FCS400 marine approval	**S22**
SD-Card accessibility via USB	
(not allowed in USA by Patent)	
Mass storage enabled	**S30**
Region-specific approvals and certificates	
South Korea (KCC)	**W28**
Additional data	
Please add "**-Z**" to Article No. and specify Order code(s) and plain text.	
Tag name	
Tag name plate, stainless steel	**Y17**

© Siemens 2021

Selection and ordering data Article No. Article No. (continued)

Operating instructions for SITRANS FC430

Description	Article No.
English	
• for firmware V 4.0 and onwards	**A5E39789392**
German	
• for firmware V 4.0 and onwards	**TBD**

All literature is available to download for free, in a range of languages, at

www.siemens.com/processinstrumentation/documentation

Heating jacket for FCS400

Description	Article No.	
Heating jacket, indoor use, 0 ... 200 °C (32 ...392 °F) max. temperature. Complete with 5 m (16.4 ft) high temperature cable fitted.		
Dedicated plug connection to included controller		
• 230 V AC		
- DN 15 electric	**A5E33035287**	
- DN 25 electric	**A5E33035324**	
- DN 50 electric	**A5E33035325**	
• 115 V AC		
- DN 15 electric	**A5E32877520**	
- DN 25 electric	**A5E32877556**	
- DN 50 electric	**A5E32877557**	
Heating jacket controller, IP65. Digital display for 0 ... 200 °C (32 ...392 °F) control setpoint		
• 230 V AC	**A5E03839193**	
• 115 V AC	**A5E03839194**	

© Siemens 2021

Overview



The compact flowmeter SITRANS FC410 is available in sizes DN 15, DN 25 and DN 50 for standard and hygienic applications.

Intended for integration into OEM skids, machines or pre-assembled plant systems. The sensor design is the marked leader in compact design which makes it easy to integrate in the compact skids. The flowmeter is based on the latest developments within digital signal processing technology - engineered for high measuring performance:

- Fast response to rapid changes in flow
- Markeds most compact sensor design
- Sensor with sanitary EHEDG and 3 A certification (in preparation)
- Fast dosing applications with control in host system
- High immunity against process noise
- High turndown ratio of flowrates
- Suitable for liquid and gas service
- Easy to install, commission and maintain

With all global marine approvals the FC410 is ideal for integration in ship fuel efficiency and environmental measurement systems. The FCT010 transmitter delivers true multi-parameter measurements i.e. massflow, density, temperature.

FC410 is available with Modbus RTU (RS 485) multi-drop serial communication.The flowmeter is supplied with SensorFlash, a micro SD card containing all relevant certificates. The SITRANS FC410 flowmeter system consists of a SITRANS FCS400 sensor and a SITRANS FCT010 transmitter always compact mounted.

Benefits

- It is truely compact and light, fitting neatly into dense piping arrangements
- Easy maintenance because modules can be exchanged rapidly
- Effective separation of measurement from plant vibration
- Reliable measurements due to high signal to noise ratio
- Shortest overall length; easy drop-in replacement into most existing installations
- Direct connection to host with high-speed Modbus simplifies machine or skid construction and set-up
- Modbus RS 485 RTU allows simple and easy integration with all Modbus masters with fast update rate of process values

Technical specifications

SITRANS FC410	
Sizes	DN 15 (½") DN 25 (1") DN 50 (2")
Accuracy	± 0.10 %
Repeatability	± 0.05 %
Flow range (liquids)	
Q_{nom} (water @ 1 bar pressure loss)	
• DN 15 (½")	3 700 kg/h (8 157 lb/h)
• DN 25 (1")	11 500 kg/h (25 353 lb/h)
• DN 50 (2")	52 000 kg/h (114 640 lb/h)
Architecture	Compact configuration
Display	Full graphical display, 240 × 160 pixels with selection of 6 languages
Power supply	12 ... 27 V DC; 1.1 W
Materials	
• Sensor	
- Wetted parts	316L stainless steel
- Enclosure	304 stainless steel
• Transmitter	Aluminum with corrosion-resistant coating class C4
Enclosure rating	IP67
Pressure ratings	
• Measuring tubes	
- 316L	100 bar (1 450 psi)
- Sensore enclosure	20 bar (DN 15, DN 25) 17 bar (DN 50)
• Sensor enclosure burst pressure	>160 bar (depending on size)
Temperature ratings	
• Process medium	
- DN 15 ... DN 50	-50 ... +200 °C (-58 ... +392 °F)
• Ambient	-40 ... +60 °C (-40 ... +140 °F)[1]
Process connections	
• Flanges	EN 1092-1 B1, EN 1092-1 D, ANSI/ASME B16.5, JIS B 2220, DIN 11864-2
• Pipe threads	ASME B1.20 (NPT), ISO 228-1 G (BSPP), VCO Quick-connect
• Hygienic threads	DIN 11851, DIN 11864-1A, ISO 2853, SMS 1145
• Hygienic clamps	DIN 11864-3A, DIN 32676-C Triclamp, ISO 2852
Approvals	
• Hazardous area	ATEX, IECEx, EAC Ex, NEPSI, CSA, cCSA us
• Pressure equipment	PED, CRN
• Hygienic	3A, EHEDG (in preparation)
NAMUR	NAMUR-compliant (e.g. NE 21, NE 41, NE 107 and NE 132)
I/O	Up to 4 channels combining ana- log, relay or digital outputs and binary input
Communication	Modbus RTU (RS 485)
EMC performance	
• Emission	EN 55011/CISPR-11 (Class A)
• Immunity	EN/IEC 61326-1 (Industry)
Mechanical load	18 ... 400 Hz random The flow meter will mechanically tolerate 3.17 g RMS in all directions. Flow accuracy cannot be guaranteed under all conditions.

[1] If operating outdoors, avoid direct sunlight, paritcularly in warm climatic regions.

© Siemens 2021

SITRANS FC410 flowmeter for OEM customers

Selection and ordering data

Article No.

SITRANS FC410 digital coriolis flowmeter with SITRANS FCS400 standard flow sensor compact or remote mounting with FCT010 transmitter ↗	**7ME4611-**					-					Ord. code		
↗ Click on the Article No. for the online configuration in the PIA Life Cycle Portal.													
Sensor size, connector size													
DN 15, DN 6 (½", ¼")	3	E											
DN 15, DN 10 (½", 3/8")	3	F											
DN 15, DN 15 (½", ½")	3	G											
DN 15, DN 20 (½", ¾")	3	H											
DN 15, DN 25 (½", 1")	3	J											
DN 25, DN 25 (1", 1")	3	L											
DN 25, DN 32 (1", 1¼")	3	M											
DN 25, DN 40 (1", 1½")	3	N											
DN 50, DN 40 (2", 1½")	4	B											
DN 50, DN 50 (2", 2")	4	C											
DN 50, DN 65 (2", 2½")	4	D											
Process connection													
EN 1092-1 B1, PN 16			A	0									
EN 1092-1 B1, PN 40			A	1									
EN 1092-1 B1, PN 63			A	2									
EN 1092-1 B1, PN 100			A	3									
EN 1092-1 D, PN 40			A	5									
EN 1092-1 D, PN 63			A	6									
EN 1092-1 D, PN 100			A	7									
EN 1092-1 D, PN 160 (max operation pressure 100 bar)			A	8									
ASME B16.5 RF, Class 150			D	1									
ASME B16.5 RF, Class 300			D	2									
ASME B16.5 RF, lass 600			D	3									
ASME B16.5 RF, Class 900 (p- and t-rating as Class 600)			D	4									
ISO 228-1G female pipe thread			E	1									
ASME B1.20.1 NPT female pipe thread			E	3									
DIN 11851 hygienic screwed			F	1									
DIN 32676, ASME, Form C (inch) (tri-clamp)			G	1									
DIN 11864-1 GS Form A Row A, Form A = O-ring type hygienic, aseptic thread connector, hygienic class H3			H	1									
DIN 11864-2 BF Form A Row A, Form A = O-ring type hygienic, aseptic flange connector, hygienic class H3			H	2									
DIN 11864-3 BKS Form A Row A, Form A = O-ring type hygienic, aseptic clamp connector, hygienic class H3			H	3									
ISO 2852 hygienic clamp			J	1									
ISO 2853 hygienic thread			J	2									
SMS 1145 hygienic screwed			K	1									
Quick connect			K	5									
JIS B2220/10K			L	2									
JIS B2220/20K			L	4									
JIS B2220/40K			L	6									
JIS B2220/63K			L	7									

Article No.

SITRANS FC410 digital coriolis flowmeter with SITRANS FCS400 standard flow sensor compact or remote mounting with FCT010 transmitter	**7ME4611-**					-					Ord. code		
Wetted parts material													
AISI 316L/1.4435/1.4404					1								
AISI 316L/1.4435/1.4404 (polished; EHEDG; 3A) (in preparation)					2								
Calibration/Accuracy class													
0.1 % flow, 5 kg/m³ density							1						
0.1 % flow, 0.5 kg/m³ density							4						
Mounting style, transmitter housing and material													
None (replacement sensor)								A					
Compact, IP67 fieldmount, aluminum								D					
Ex approval (depending on variant)													
Non-Ex									A				
ATEX (zone 1 / zone 21)									C				
IECEx (zone 1 / zone 21)									F				
US (cCSAus), Div 1									L				
Canada (cCSAus), zone 1									M				
NEPSI									N				
INMETRO (in preparation)									P				
KCC (in preparation)									Q				
EAC									U				
Local User Interface													
Blind										1			

© Siemens 2021

Selection and ordering data

	Orde code
Further designs	
Please add "**-Z**" to Article No. and specify Order code(s).	
Cable glands	
None (replacement sensor)	**A00**
Metric, no glands	**A01**
Metric, plastic	**A02**
Metric, brass/Ni plated	**A05**
Metric, stainless steel	**A06**
NPT, no glands	**A11**
NPT, plastic	**A12**
NPT, brass/Ni plated	**A15**
NPT, stainless steel	**A16**
Metric thread with M12 socket fitted	**A20**
Sofware functions and CT approvals	
Standard	**B11**
I/O configuration Ch1	
Modbus RTU RS 485	**E14**
I/O configuration Ch2, Ch3 and Ch4	
None	**F00**
Add-on options and accessories	
Please add "**-Z**" to Article No. and specify Order code(s).	
Certificates	
Pressure testing certificate CRN	**C01**
Pressure testing certificate PED	**C02**
Material certificate EN 10204-3.1 (wetted parts)	**C05**
Welding inspection certificate	**C07**
Factory certificate EN 10204 2.1	**C10**
Factory certificate EN 10204 2.2	**C11**
Cleaned for oil and grease	**C50**
Customer selected calibration	
Multi-point (5 flows × 2 pass) Flow 10 ... 100 % of Q_{norm}	**Y60**
Multi-point (10 flows × 1 pass) Flow 10 ... 100 % of Q_{norm}	**Y61**
Multi-point calibration (5 flows × 2 pass) Flow 2 ... 20 % of Q_{norm}	**Y69**
Multi-point calibration (5 flows × 2 pass) Flow 5 ... 50 % of Q_{norm}	**Y71**
Multi-point calibration (10 flows × 1 pass) Flow 2 ... 20 % of Q_{norm}	**Y72**
Multi-point calibration (10 flows × 1 pass) Flow 5 ... 50 % of Q_{norm}	**Y73**
Cable	
None	**L50**
5 m (16.4 ft), sensor cable, 4 wire, with 2 pcs M12 plugs mounted	**L51**
5 m (16.4 ft), sensor cable, 4 wire, without plugs for terminal connection	**L52**
5 m (16.4 ft), sensor cable, 4 wire, with 1 pc M12 plugs mounted	**L53**
10 m (32.8 ft), sensor cable, 4 wire, with 2 pcs M12 plugs mounted	**L55**
10 m (32.8 ft), sensor cable, 4 wire, without plugs for terminal connection	**L56**
10 m (32.8 ft), sensor cable, 4 wire, with 1 pc M12 plugs mounted	**L57**
25 m (82 ft), sensor cable, 4 wire, with 2 pcs M12 plugs mounted	**L59**

	Order code
Further designs	
Please add "**-Z**" to Article No. and specify Order code(s).	
25 m (82 ft), sensor cable, 4 wire, without plugs for terminal connection	**L60**
25 m (82 ft), sensor cable, 4 wire, with 1 pc M12 plugs mounted	**L61**
50 m (164 ft), sensor cable, 4 wire, with 2 pcs M12 plugs mounted	**L63**
50 m (164 ft), sensor cable, 4 wire, without plugs for terminal connection	**L64**
50 m (164 ft), sensor cable, 4 wire, with 1 pc M12 plugs mounted	**L65**
75 m (246 ft), sensor cable, 4 wire, with 2 pcs M12 plugs mounted	**L67**
75 m (246 ft), sensor cable, 4 wire, without plugs for terminal connection	**L68**
75 m (246 ft), sensor cable, 4 wire, with 1 pc M12 plugs mounted	**L69**
Sensor options	
FCS400 marine approval	**S22**
Region-specific approvals and certificates	
South Korea (KCC)	**W28**
Additional data	
Please add "**-Z**" to Article No. and specify Order code(s) and plain text.	
Tag name	
Tag name plate, stainless steel	**Y17**

Operating instructions for SITRANS FC410

Description	Article No.
English	
• for firmware V 4.0 and onwards	**A5E39789214**
German	
• for firmware V 4.0 and onwards	**TBD**

All literature is available to download for free, in a range of languages, at

www.siemens.com/processinstrumentation/documentation

© Siemens 2021

SITRANS FCS400 with FCT070 transmitter

Overview



Full integration in the Siemens SIMATIC systems PCS7 or in TIA portal with FCT070 Faceplates with the ET 200SP ST & HF powerful IO system for compact control cabinets. The complete flowmeter system consists of a SITRANS FCS400 sensor and a SIMATIC ET200 SP Coriolis module FCT070 transmitter.

TM FCT070 offers real-time data processing and the display of all measuring and status data of the Coriolis flowmeter.

For hazardous area the FSC400 sensor can be placed in Ex Zone 1/21 or Class1 Div 1 locations . Together with the Sitrans I300 power/barrier module the FCT070 transmitter can be place in Zone 2 or Div 2 areas.

Benefits

- FCS400 sensor in sizes from DN 15 to DN 50 mm in a large verity of process connections and wetted materials
- Markeds most compact sensor design
- Sensor with sanitary EHEDG and 3A certification
- Full hazardous area solutions
- Easy integration into automation process control as TIA portal and PCS7
- Easy selection and integration of flow meters via TIA-Selector
- Cost effective integration of Coriolis flow meters for PLC controlled machines
- SITRANS FCT070 ET 200SP technology module and can combined with all other SIMATIC ET200 ST & HF modules.
- The FCT070 has all high-end transmitter functionality integrated including the advanged fraction tables on bord
- Fast and trouble-free communication between the flow meter and the PLC through digital data communication with up to 10 ms update rate
- Integrated advanced Two-stage batch controller functionality without additional modules. I/Os are onboard.

Technical specifications

SITRANS FCS400 with FCT070 transmitter	
Sizes	DN 15 (½") DN 25 (1") DN 50 (2")
Accuracy	± 0.10 %
Repeatability	± 0.05 %
Flow range (liquids)	
Q_{nom} (water @ 1 bar pressure loss)	
• DN 15 (½")	3 700 kg/h (8 157 lb/h)
• DN 25 (1")	11 500 kg/h (25 353 lb/h)
• DN 50 (2")	52 000 kg/h (114 640 lb/h)
Measurement of	Mass flow, volume flow, density, temperature Fraction A flow, fraction A % Fraction B flow, fraction B %
Architecture	Remote configuration
System integration	ET200 SP; PCS7 and TIA portal with faceplates ET 200SP ST & HF
Power supply	24 V DC, 19.2 ... 28.8 V
Materials	
• Sensor	
- Wetted parts	316L stainless steel
- Enclosure	304 stainless steel
• Transmitter	Aluminum with corrosion-resistant coating class C4
Enclosure rating	IP67
Pressure ratings	
• Measuring tubes	
- 316L	100 bar (1 450 psi)
- Sensore enclosure	20 bar (DN 15, DN 25) 17 bar (DN 50)
• Sensor enclosure burst pressure	>160 bar (depending on size)
Temperature ratings	
• Process medium	
- DN 15 ... DN 50	-50 ... +200 °C (-58 ... +392 °F)
• Ambient	-40 ... +60 °C (-40 ... +140 °F)[1]
Process connections	
• Flanges	EN 1092-1 B1, EN 1092-1 D, ANSI/ASME B16.5, JIS B 2220, DIN 11864-2
• Pipe threads	ASME B1.20 (NPT), ISO 228-1 G (BSPP), VCO Quick-connect
• Hygienic threads	DIN 11851, DIN 11864-1A, ISO 2853, SMS 1145
• Hygienic clamps	DIN 11864-3A, DIN 32676-C Triclamp, ISO 2852
Approvals	
• Hazardous area	FCS400 sensor: ATEX, IECEx, EAC Ex, NEPSI, CSA, cCSA us FCT070: Zone 2 & Class1 Div 2
• Pressure equipment (in preparation)	PED, CRN
• Hygienic	3A, EHEDG
NAMUR	NAMUR-compliant (e.g. NE 21, NE 41, NE 107 and NE 132)
I/O (FCT070)	2 digital Input and 2 digital output
Totalizer (FCT070)	3 totalizer
Communication (FCT070)	Integrated PROFINET for SIMATIC integration and other PROFINET Controllers
EMC performance	
• Emission	EN 55011/CISPR-11 (Class A)
• Immunity	EN/IEC 61326-1 (Industry)
Mechanical load	18 ... 400 Hz random The flow meter will mechanically tolerate 3.17 g RMS in all directions. Flow accuracy cannot be guaranteed under all conditions.

[1] operating outdoors, avoid direct sunlight, paritcularly in warm climatic regions.

© Siemens 2021

Selection and ordering data

Article No.

SITRANS FC430 digital coriolis flowmeter with SITRANS FCS400 standard flow sensor for integration with FCT070 transmitter ↗	**7ME4617-**					-					Ord. code		
↗ Click on the Article No. for the online configuration in the PIA Life Cycle Portal.													
Sensor size, connector size													
DN 15, DN 6 (½", ¼")	3	E											
DN 15, DN 10 (½", 3/8")	3	F											
DN 15, DN 15 (½", ½")	3	G											
DN 15, DN 20 (½", ¾")	3	H											
DN 15, DN 25 (½", 1")	3	J											
DN 25, DN 25 (1", 1")	3	L											
DN 25, DN 32 (1", 1¼")	3	M											
DN 25, DN 40 (1", 1½")	3	N											
DN 50, DN 40 (2", 1½")	4	B											
DN 50, DN 50 (2", 2")	4	C											
DN 50, DN 65 (2", 2½")	4	D											
Process connection													
EN 1092-1 B1, PN 16			A	0									
EN 1092-1 B1, PN 40			A	1									
EN 1092-1 B1, PN 63			A	2									
EN 1092-1 B1, PN 100			A	3									
EN 1092-1 D, PN 40			A	5									
EN 1092-1 D, PN 63			A	6									
EN 1092-1 D, PN 100			A	7									
EN 1092-1 D, PN 160 (max operation pressure 100 bar)			A	8									
ASME B16.5 RF, class 150			D	1									
ASME B16.5 RF, class 300			D	2									
ASME B16.5 RF, class 600			D	3									
ASME B16.5 RF, class 900 (p- and t-rating as class 600)			D	4									
ISO 228-1G female pipe thread			E	1									
ASME B1.20.1 NPT female pipe thread			E	3									
DIN 11851 hygienic screwed			F	1									
DIN 32676, ASME, Form C (inch) (tri-clamp)			G	1									
DIN 11864-1 GS Form A Row A, Form A = O-ring type hygienic, aseptic thread connector, hygienic class H3			H	1									
DIN 11864-2 BF Form A Row A, Form A = O-ring type hygienic, aseptic flange connector, hygienic class H3			H	2									
DIN 11864-3 BKS Form A Row A, Form A = O-ring type hygienic, aseptic clamp connector, hygienic class H3			H	3									
ISO 2852 hygienic clamp			J	1									
ISO 2853 hygienic thread			J	2									
SMS 1145 hygienic screwed			K	1									
Quick connect			K	5									
JIS B2220/10K			L	2									
JIS B2220/20K			L	4									
JIS B2220/40K			L	6									
JIS B2220/63K			L	7									

Article No.

SITRANS FC430 digital coriolis flowmeter with SITRANS FCS400 standard flow sensor for integration with FCT070 transmitter	**7ME4617-**					-					Ord. code		
Wetted parts material													
AISI 316L/1.4435/1.4404					1								
AISI 316L/1.4435/1.4404 (polished; EHEDG; 3A) (in preparation)					2								
Calibration/Accuracy class													
0.1 % flow, 5 kg/m³ density							1						
0.1 % flow, 0.5 kg/m³ density							4						
Mounting style, transmitter housing and material													
Compact, IP67 fieldmount, aluminum								D					
Ex approval (depending on variant)													
Non-Ex									A				
ATEX (zone 1 / zone 21)									C				
IECEx (zone 1 / zone 21)									F				
US (cCSAus), Div 1									L				
Canada (cCSAus), zone 1									M				
NEPSI									N				
INMETRO (in preparation)									P				
KCC (in preparation)									Q				
EAC									U				
Local User Interface													
Blind										1			

Selection and ordering data

Order code

Further designs Please add "**-Z**" to Article No. and specify Order code(s).	
Cable glands	
Metric, no glands	**A01**
Metric, plastic	**A02**
Metric, brass/Ni plated	**A05**
Metric, stainless steel	**A06**
NPT, no glands	**A11**
NPT, plastic	**A12**
NPT, brass/Ni plated	**A15**
NPT, stainless steel	**A16**
Metric thread with M12 socket fitted	**A20**
Sofware functions and CT approvals	
Standard software DSL	**B10**
I/O configuration Ch1	
No output channel (integration of FCT070)	**E00**
I/O configuration Ch2, Ch3 and Ch4	
None	**F00**

© Siemens 2021

SITRANS FCS400 with FCT070 transmitter

Selection and ordering data

	Order code
Add-on options and accessories	
Please add "**-Z**" to Article No. and specify Order code(s).	
Certificates	
Pressure testing certificate CRN	**C01**
Pressure testing certificate PED	**C02**
Material certificate EN 10204-3.1 (wetted parts)	**C05**
Welding inspection certificate	**C07**
Factory certificate EN 10204 2.1	**C10**
Factory certificate EN 10204 2.2	**C11**
Cleaned for oil and grease	**C50**
Customer selected calibration	
Multi-point (5 flows × 2 pass) Flow 10 ... 100 % of Q_{norm}	**Y60**
Multi-point (10 flows × 1 pass) Flow 10 ... 100 % of Q_{norm}	**Y61**
Multi-point calibration (5 flows × 2 pass) Flow 2 ... 20 % of Q_{norm}	**Y69**
Multi-point calibration (5 flows × 2 pass) Flow 5 ... 50 % of Q_{norm}	**Y71**
Multi-point calibration (10 flows × 1 pass) Flow 2 ... 20 % of Q_{norm}	**Y72**
Multi-point calibration (10 flows × 1 pass) Flow 5 – 50 % of Q_{norm}	**Y73**
Cable	
None	**L50**
5 m (16.4 ft), sensor cable, 4 wire, without plugs for terminal connection	**L52**
5 m (16.4 ft), sensor cable, 4 wire, with 1 pc M12 plugs mounted	**L53**
10 m (32.8 ft), sensor cable, 4 wire, without plugs for terminal connection	**L56**
10 m (32.8 ft), sensor cable, 4 wire, with 1 pc M12 plugs mounted	**L57**
25 m (82 ft), sensor cable, 4 wire, without plugs for terminal connection	**L60**
25 m (82 ft), sensor cable, 4 wire, with 1 pc M12 plugs mounted	**L61**
50 m (164 ft), sensor cable, 4 wire, without plugs for terminal connection	**L64**
50 m (164 ft), sensor cable, 4 wire, with 1 pc M12 plugs mounted	**L65**
75 m (246 ft), sensor cable, 4 wire, without plugs for terminal connection	**L68**
75 m (246 ft), sensor cable, 4 wire, with 1 pc M12 plugs mounted	**L69**
Region-specific approvals and certificates	
South Korea (KCC)	**W28**
Additional data	
Please add "**-Z**" to Article No. and specify Order code(s) and plain text.	
Tag name	
Tag name plate, stainless steel	**Y17**

Description	Article No.	
SITRANS FCT070 **Transmitter for ET 200SP**	**7ME4138-6AA00-0BB1**	
BU20-P12+A0+4B, PU1 **BaseUnit plate for ET 200SP**	**6ES7193-6BP20-0BB0** **6ES7193-6BP20-0BB1**	
SITRANS I300 **Isolating power supply – Ex barrier**	**A5E39832532**	

All literature is available to download for free, in a range of languages, at

www.siemens.com/processinstrumentation/documentation

© Siemens 2021

Overview

MASS 2100 DI 1.5 to DI 15 and the FC300 DN4 is suitable for low flow measurement applications of a variety of liquids and gases.

The sensor is designed with a single bended tube in corrosion resistant stainless steel AISI316L or Hastelloy C22 and a solid stainless steel fully welded enclosure to protect the measuring tubes from any harsh environments. For hazardous area applications the MASS 2100 / FC300 DN4 sensor comes in a number of common hazardous area approved variants like ATEX, IECEx, cCSAus, EAC, and NEPSI.

The sensor offers superior performance in terms of flow accuracy, turn-down ratio and density accuracy and delivers true multi-parameter measurements i.e.: mass flow, volume flow, density, temperature and fraction.

With the large variety of process connections and the ability for high pressure solutions up to 1 000 bar, the compact single tube design is especially suitable for high end applications in all industry segments e.g. Automotive, Painting, Chemical, Oil & Gas and F&B. Accurate dosing and mixing down to drops are widely used applications.

The main applications for the MASS 2100 / FC300 DN 4 sensor can be found in:	
Chemical industry	Liquid and gas measurement within Miniplant and R&D, dosing of additives and catalysts
Cosmetic industry	Dosing of essence and fragrances
Pharmaceutical industry	High-speed dosing and coating of pills, filling of ampuls/injectors
Food and beverage industry	Dosing of flavourings, colours and additives, density measurement, inline
	Measurement of liquid or gaseous CO2
Automotive industry	Fuel injection nozzle and pump testing, filling of AC units, engine consumption, paint robots, ABS testbeds

Integration

The SITRANS MASS 2100/FC300 DN4 sensor are suitable for both indoor and outdoor installation and meets the requirements of Protection Class IP67/NEMA 4X. Optionally the sensor can be ordered with hazardous certification to Zone 1 (ATEX, IECEx, cCSAus, EAC Ex, NEPSI).

It is important to ensure that the sensor tubes are always completely filled with homogeneous fluid; otherwise measuring errors may occur. Suitable fluids are clean liquids, pastes, light slurries or gases. Condensing vapours, aerated liquids or slush are not recommended.

The materials in contact with the process medium must be evaluated for corrosion and erosion resistances for long sensor life.

The pressure drop through the sensor is a function of the properties of the fluid and the flow rate. A pressure loss and accuracy calculator can be found on the Siemens Internet site https://www.siemens.com

The preferred flow direction is indicated by an arrow on the sensor. Flow in the direction of the arrow will be measured as positive. The flow direction can be adjusted at the transmitter to compensate for reverse installation.

Shut-off devices

To conduct a system zero adjustment, secure shut-off devices are required in the pipeline.

Where possible, shut-off devices should be installed both upstream and downstream of the flowmeter.

© Siemens 2021

Integration (continued)

Installation guidelines MASS 2100 DI 3 … DI 15 (1/8" … ½")

In order to perform according to given specifications for flow and density accuracy, the sensor must be installed using rigid mounting brackets as shown in the installation examples.

If the liquid is volatile or contains solid particles, vertical mounting is not recommended.

	Liquid	Gas
Horizontal	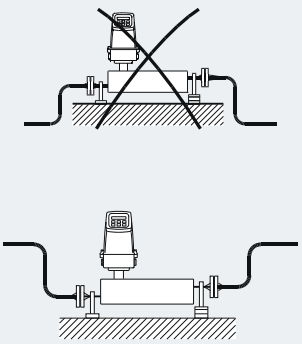	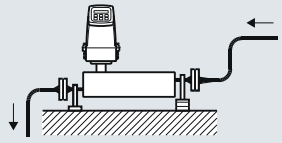
Vertical	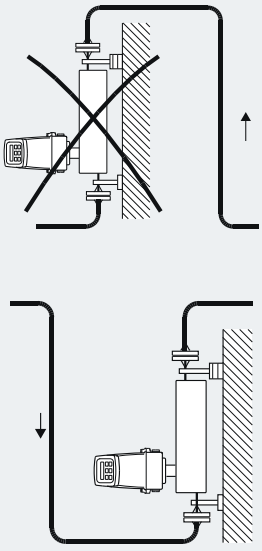	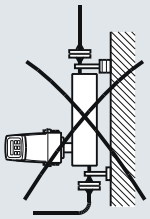

Vibration

Always locate the flowmeter as far away as possible from components that generate mechanical vibration in the piping. Avoid vibration. If necessary use flexible pipes.

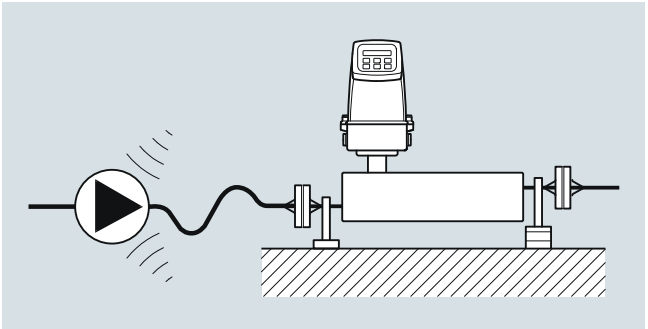

Cross talk

Cross talk between sensors mounted close to each other may disturb the measurement. To avoid cross talk never mount more than one meter on each frame and mount flexible hose connections between the sensors as shown.

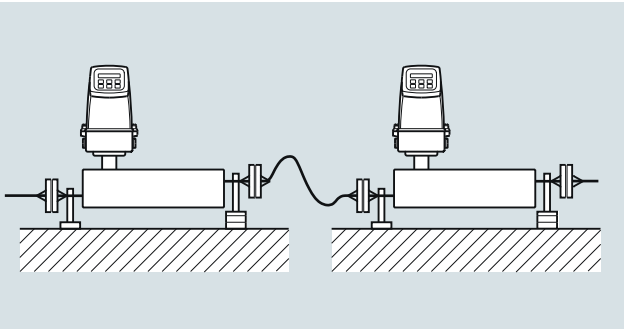

© Siemens 2021

Integration (continued)

Zero point adjustment

To facilitate zero point adjustment a shut-off valve should always be mounted in connection with the sensor as a proper zero point setting is essential for a good accuracy.

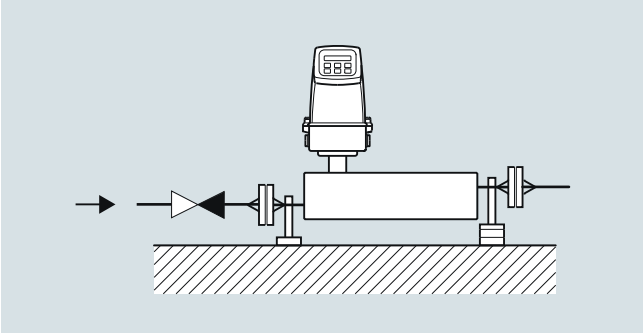

Installation guidelines MASS 2100 DI 1.5 (1/16")

- The optimal installation is horizontal.
  If vertical mounting is necessary, upward flow is recommended to facilitate the removal of air bubbles. To remove the air from the sensor the flow speed in the sensor must be at least 1 m/s.
  If there are solid particles in the liquid, especially in connection with low flow, it is recommended that the sensor be mounted horizontally with inlet flange uppermost so that particles are more easily flushed out. To ensure that the sensor does not become partially empty, there must be sufficient counter-pressure on the unit min. 0.2 bar (2.9 psi).
- Mount the sensor on a vibration-free wall or steel frame.
- Locate the sensor low in the system in order to avoid an underpressure in the sensor separating air/gas in the liquid.
- Ensure that the sensor is not emptied of liquid (during normal operation) otherwise incorrect measurement will occur.

Horizontal

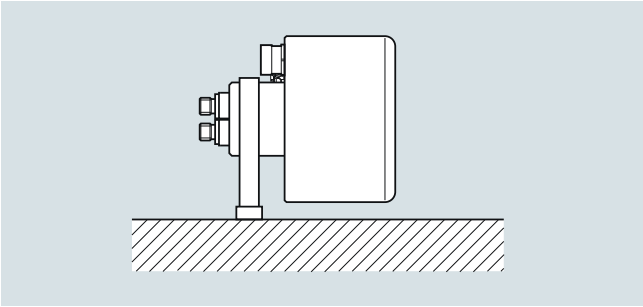

Liquid and gas application

Vertical

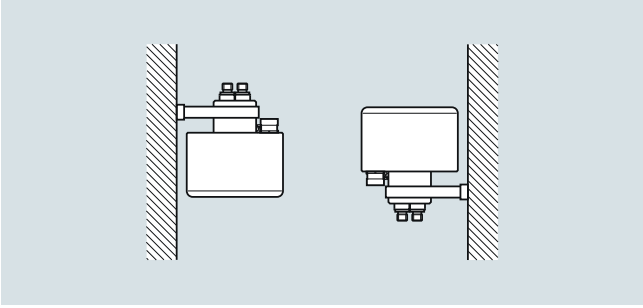

Liquid application (left), gas application (right)

Installation guidelines for SITRANS FC300 sensor

Horizontal installation as shown in figure A is recommended with gas or liquid applications.

This installation is also recommended when the flow velocity is low (< 1 m/s) or the liquid contains solid particles or air bubbles.

Vertical installation as shown in figure B can be used for liquid or gas applications.

For liquid applications upwards flow is recommended to facilitate the removal of air bubbles and to avoid partly emptying of the sensor.

For gas applications we recommend to place the flow inlet on the sensor high and the outlet low to remove impurities and oil films.

- To ensure that the sensor does not become partly empty, there must be a sufficient counter-pressure on the unit min. 0.2 bar (2.9 psi)
- Mount the sensor on a vibration-free and plane wall or steel frame
- Locate the sensor low in the system in order to avoid underpressure in the sensor separating air/gas in the liquid
- Ensure that the sensor is not emptied of liquid (during normal operation) otherwise incorrect measurement will occur

Horizontal mounting (recommended)

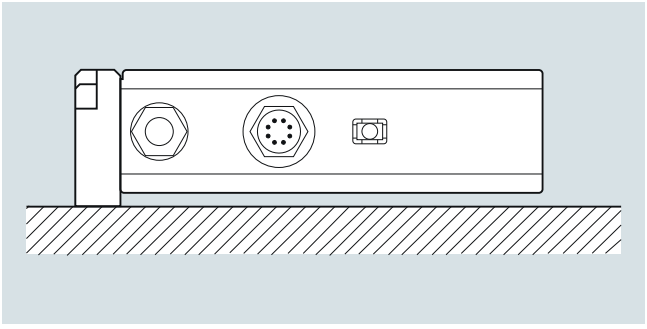

Liquid or gas (low to high flow)

Vertical mounting

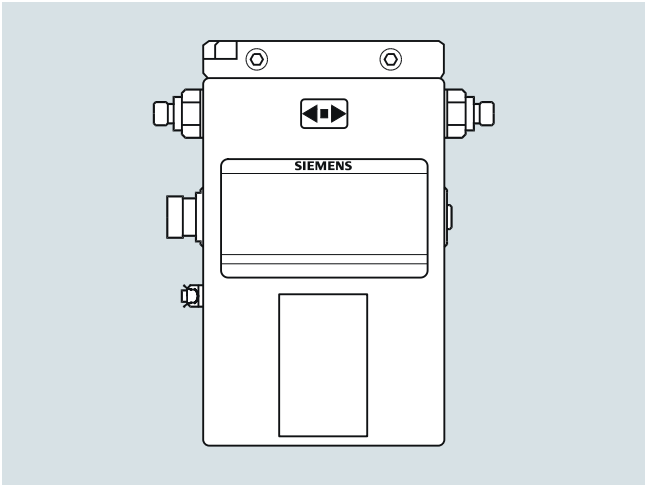

Liquid or gas (medium to high flow)

© Siemens 2021

SITRANS FC MASS 2100 and FC300 DN 4 sensors

Technical specifications

Versions dimensions		DI 1.5 (1/16)	DI 3 (1/8)	DI 6 (¼)	DI 15 (5/8)	FC300 DN 4
Inside pipe diameter (sensor consists of one continuous pipe)	mm (inch)	1.5 (0.06)	3.0 (0.12)	6.0 (0.24)	14.0 (0.55)	SS: 3.5 (0.14) Hast. 3.0 (0.12)
Pipe wall thickness	mm (inch)	0.25 (0.01)	0.5 (0.02)	1.0 (0.04)	1.0 (0.04)	SS: 0.25 (0.0098) Hast. 0.5 (0.0196)
Mass flow measuring range (liquids)	kg/h (lb/h)	0 ... 30 (0 ... 66)	0 … 250 (0 … 550)	0 … 1 000 (0 … 2 200)	0 … 5 600 (0 … 12 345)	0 ... 350 (0 ... 772)
Density (for liquids)	g/cm³ (lb/inch³)	0 … 2.9 (0 … 0.10)	0 … 2.9 (0 … 0.10)	0 … 2.9 (0 … 0.10)	0 … 2.9 (0 … 0.10)	0 … 2.9 (0 … 0.10)
Fraction e.g.	°Brix	0 … 100	0 ... 70 (applicable temperature range: 10 ... 99 °C (50 ... 210.2 °F))	0 ... 70 (applicable temperature range: 10 ... 99 °C (50 ... 210.2 °F))	0 ... 70 (applicable temperature range: 10 ... 99 °C (50 ... 210.2 °F))	0 … 100
Temperature						
Media temperature	°C (°F)	-50 … +180 °C (-58 … +356 °F)	-50 … +180 °C (-58 … +356 °F)	-50 … +180 °C (-58 … +356 °F)	-50 … +180 °C (-58 … +356 °F)	-40 ... 115 (40 ... 239) -40 ... 180 (40 ... 356)
Ambient temperature	°C (°F)	-20 … +50 °C (-4 … +122 °F)	-20 … +50 °C (-4 … +122 °F)	-20 … +50 °C (-4 … +122 °F)	-20 … +50 °C (-4 … +122 °F)	-20 … +50 °C (-4 … +122 °F)
Liquid pressure measuring pipe[1]						
Stainless steel	bar (psi)	230 (3 336)	230 (3 336)	265 (3 844)	130 (1 885)	130 (1 885)
Hastelloy C22/2.4602	bar (psi)	365 (5 294)	350 (5 076)	410 (5 946)	200 (2 900)	410 (5 945)
Materials						
Measuring pipe, flange and thread connection		Stainless steel AISI 316L/1.4435 Hastelloy C22/2.4602				
Enclosure and enclosure material		IP67 (NEMA 4) and stainless steel AISI 326L/1.4404 **The housing is not rated for pressure containment**				
Process connections[2]						
Flange						
• DIN 1092-1, PN 40				DN 10	DN 15	
• ANSI B16.5, Class 150				½"	½"	
• ANSI B16.5, Class 600 (Class 300)				½"	½"	
Dairy (screwed connection, PN 16/25/40)[3]						
• DIN 11851				DN 10	DN 15	
• ISO 2853/BS 4825 part 4 (SS3351)				25 mm	25 mm	
Dairy clamp connection (PN 16)[3]						
• ISO 2853/BS 4825 part 3 (SS3016)				25 mm	25 mm	
Thread						
• ISO 228/1, PN 100		G¼" male	G¼" female	G¼" male	G½" male	G¼" male
• ANSI/ASME B1.20.1, PN 100		¼" NPT male	¼" NPT female	¼" NPT male	½" NPT male	¼" NPT male
Ex-version (sensor)						
• ATEX, IECEX, EAC Ex		Zone 0: Ex ia IIC T3...T6 Ga				
• UL (c-UL-us)		Class I, Div. 1: Grp. A, B, C, D				
• cCSAus		Class 1 Div 1 or Class 1 Zone1				

1) Max. at 20 °C (68 °F), DIN 2413, DIN 17457

2) Other connections to order, see "Selection and Ordering data"

3) Material, AISI 316/1.4401 or corresponding

For accuracy specification see "System information SITRANS FC".

© Siemens 2021

Technical specifications (continued)

Pressure drop MASS 2100

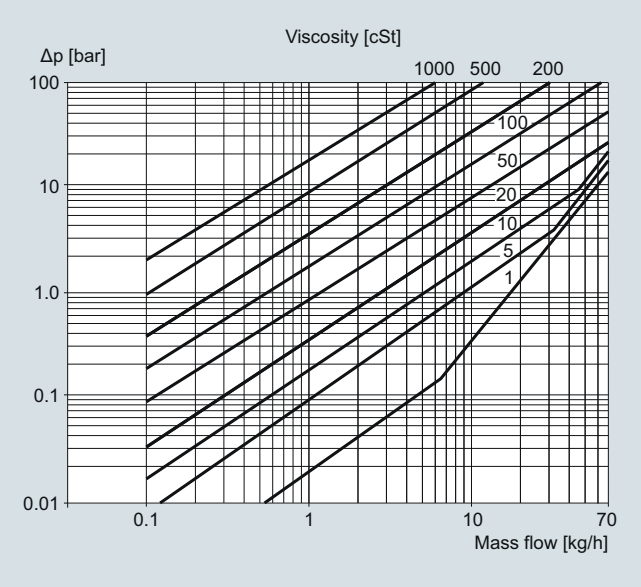

MASS 2100 DI 1.5 (1/16"), pressure drop for density = 1 000 kg/m^3

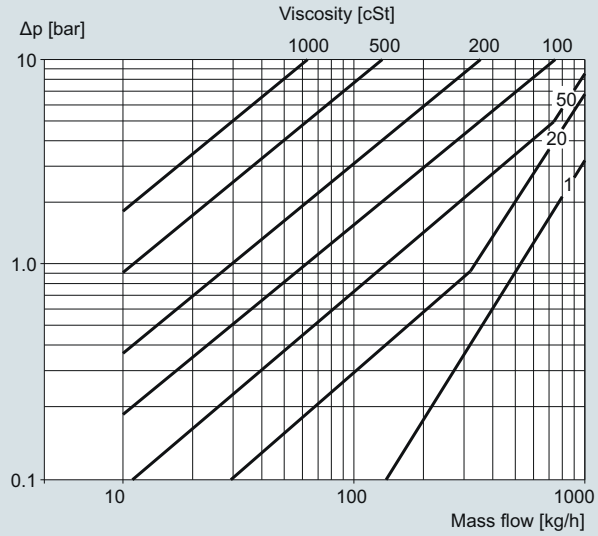

MASS 2100 DI 6 (¼"), pressure drop for density = 1 000 kg/m^3

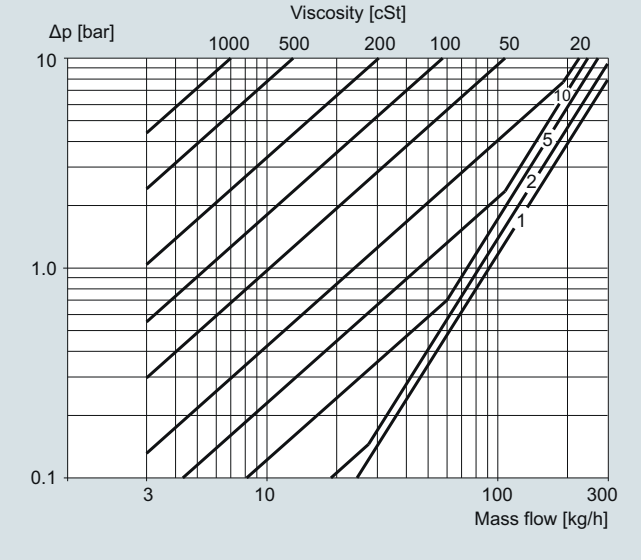

MASS 2100 DI 3 (1/8"), pressure drop for density = 1 000 kg/m^3

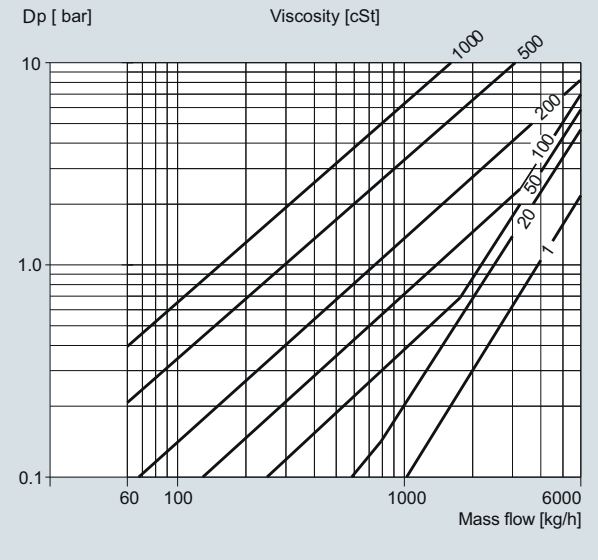

MASS 2100 DI 15 (½"), pressure drop for density = 101 500 kg/m^3

© Siemens 2021

3

Technical specifications (continued)

Pressure drop FC300 DN4

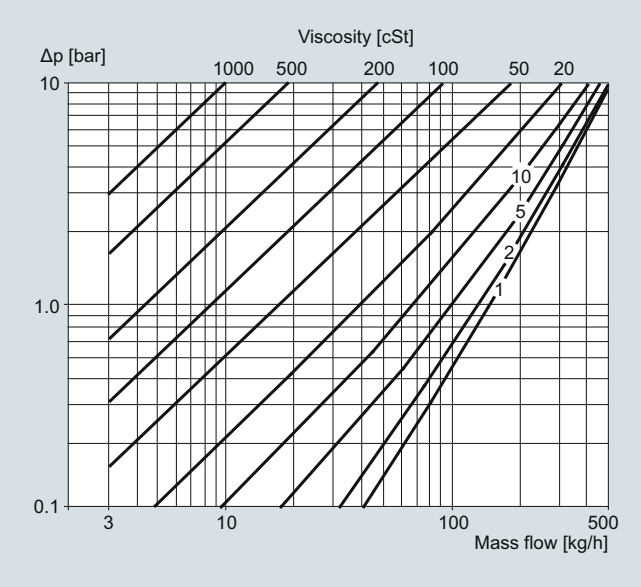

Stainless steel 316L/1.4404

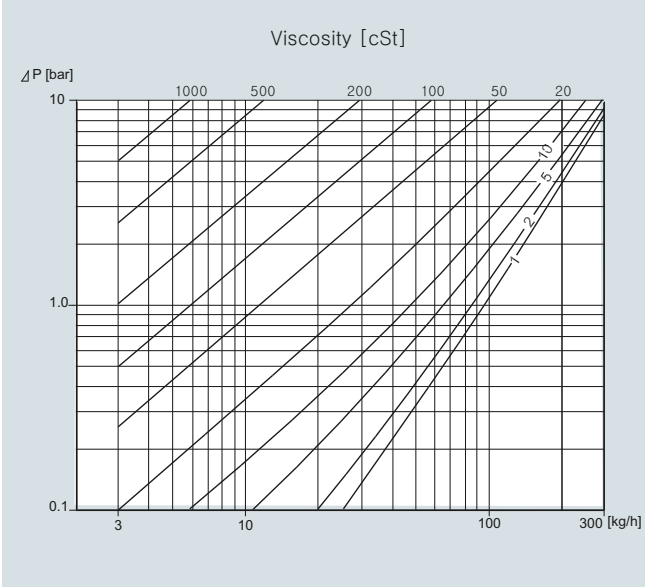

SITRANS FC300 DN 4, pressure loss, viscosity and flow rate for Hastelloy C22 / 2.4602

Pressure/temperature curves MASS 2100 DI 3 ... 15

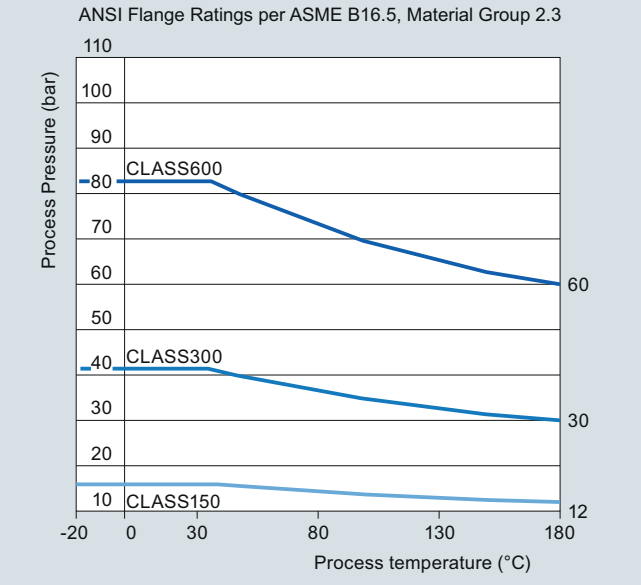

ASME flanges B16.5 stainless steel

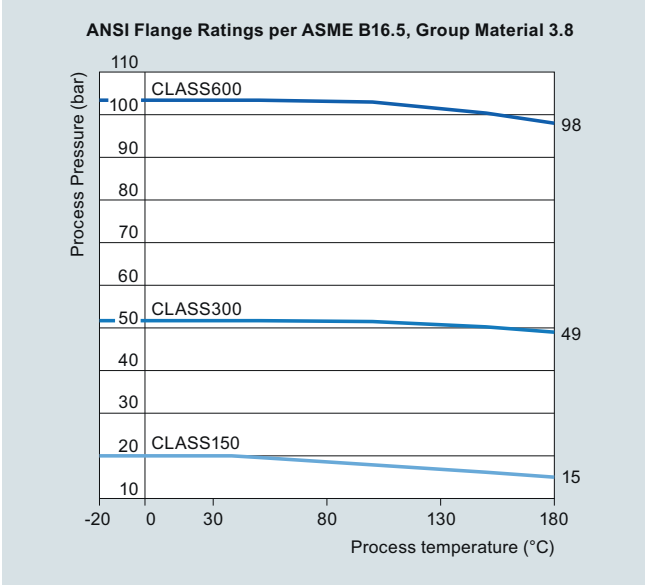

ASME flanges B16.5 Hastelloy C22/2.4602

© Siemens 2021

Technical specifications (continued)

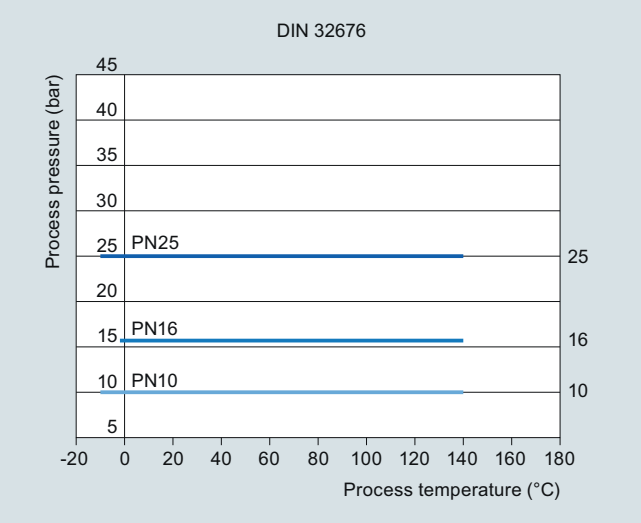

DIN 32676 flanges stainless steel (PN 10 ... PN 25)

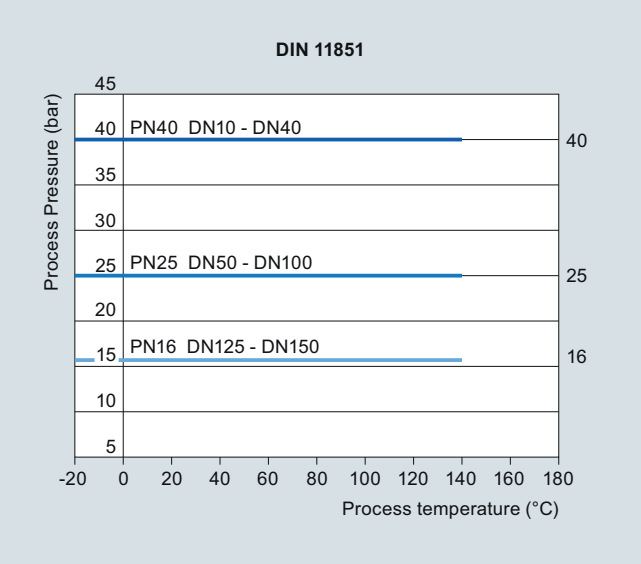

DIN 11581 flanges stainless steel (PN 25 ... PN 40)

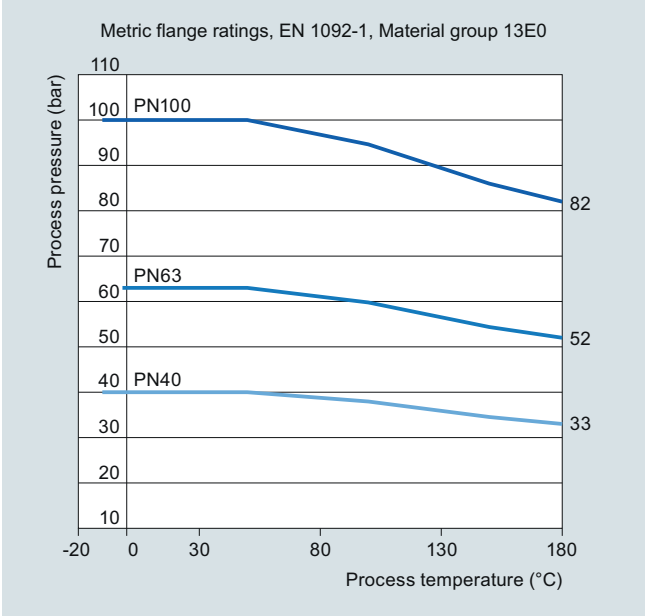

EN 1092 flanges stainless steel (PN 40 ... PN 100)

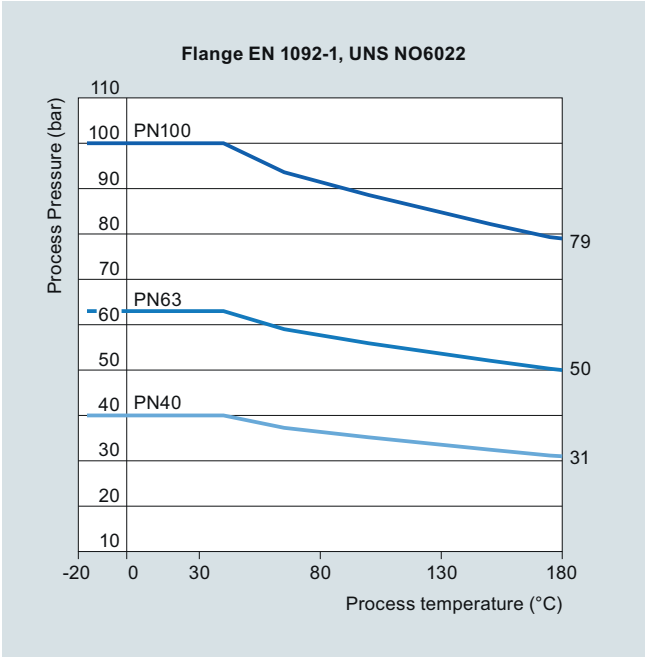

EN 1092 flanges Hastelloy C22/2.4602 (PN 40 ... PN 100)

© Siemens 2021

3

Technical specifications (continued)

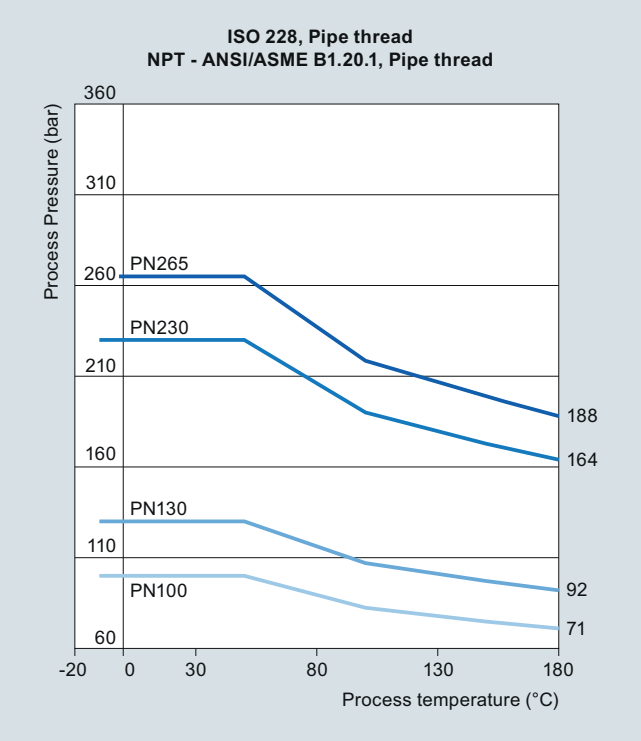

ISO 228 and NPT pipe thread stainless steel (PN 100 ... PN 265)

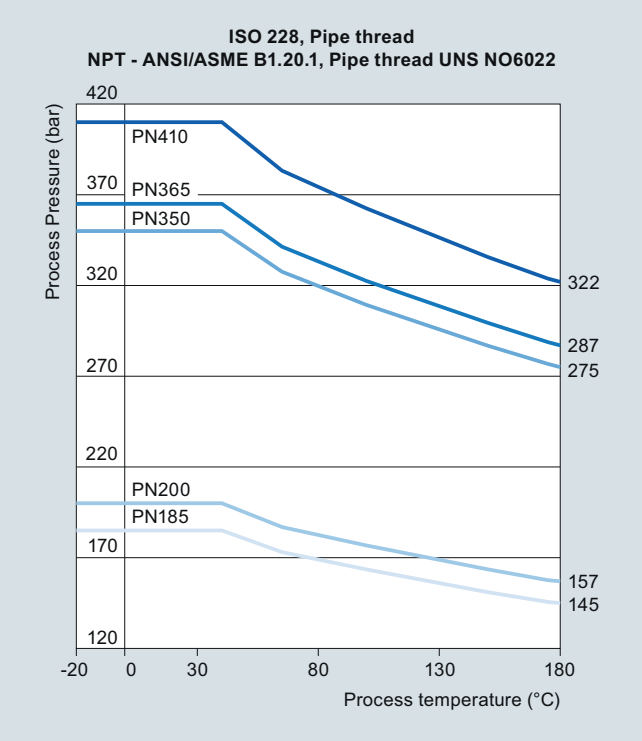

ISO 218 and NPT pipe thread stainless steel (PN 185 ... PN 410)

For further information on the PED standard and requirements, see the pressure equipment directives 2014/68/EU.

© Siemens 2021

Dimensional drawings

MASS 2100 DI 1.5 (1/16")

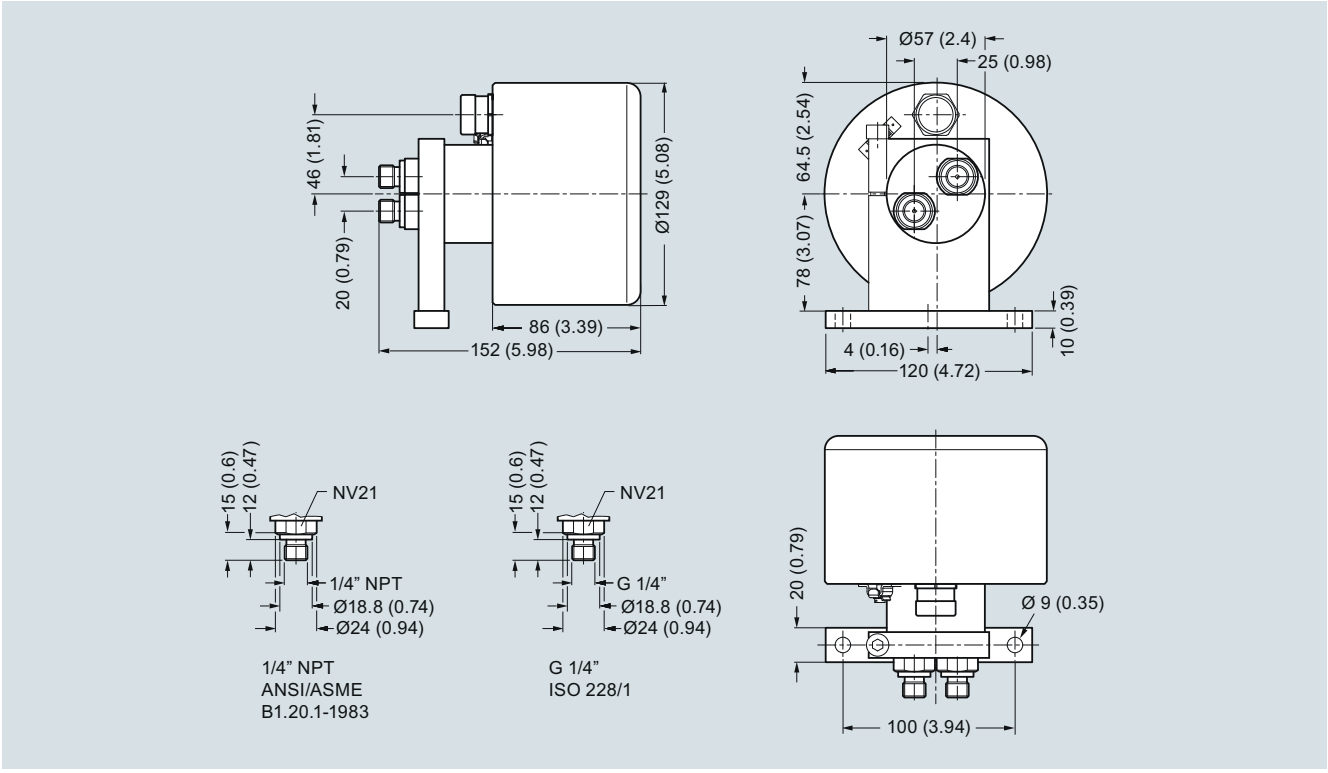

Dimensions in mm (inch)

MASS 2100 DI 1.5 High-temperature version to 180 °C (356 °F)

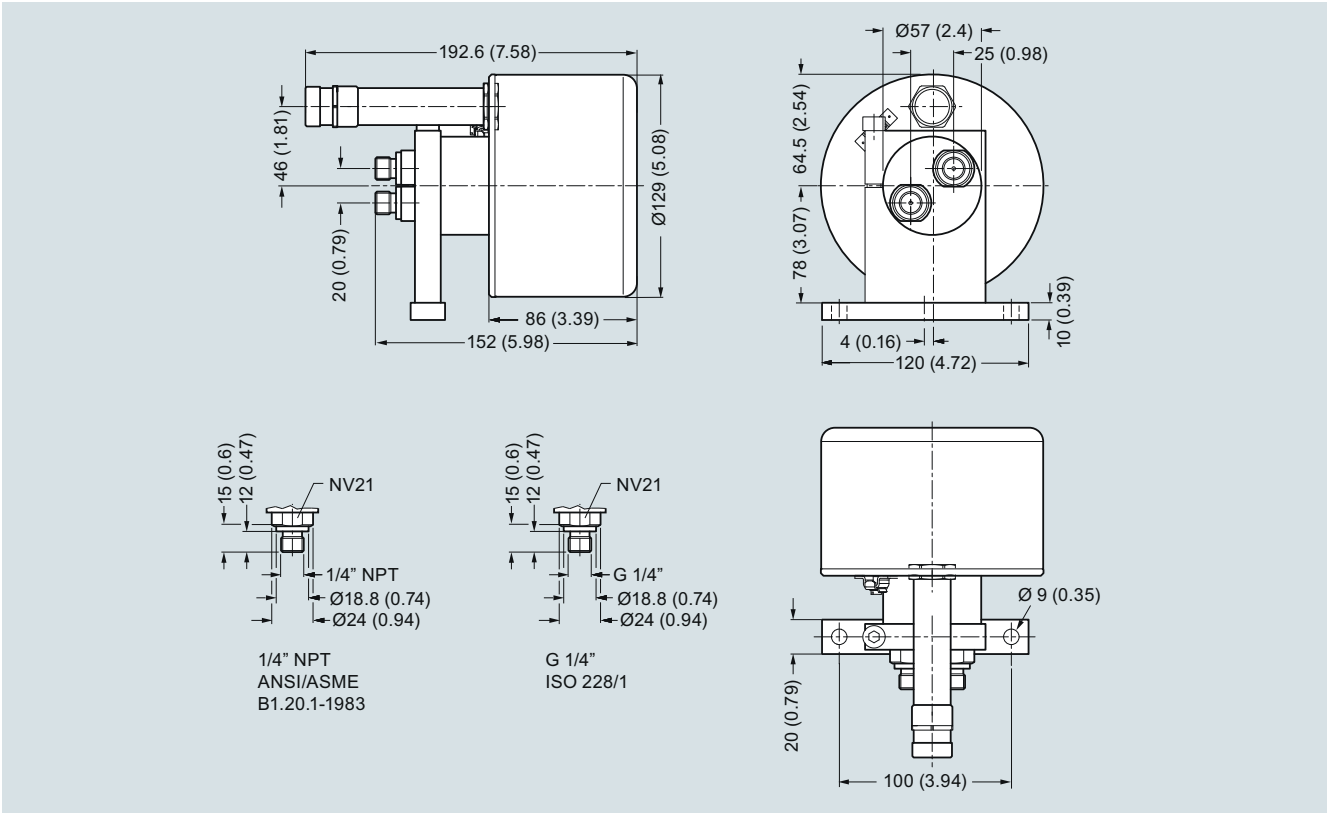

Dimensions in mm (inch)

© Siemens 2021

3

Dimensional drawings (continued)

SITRANS FC300 DN 4

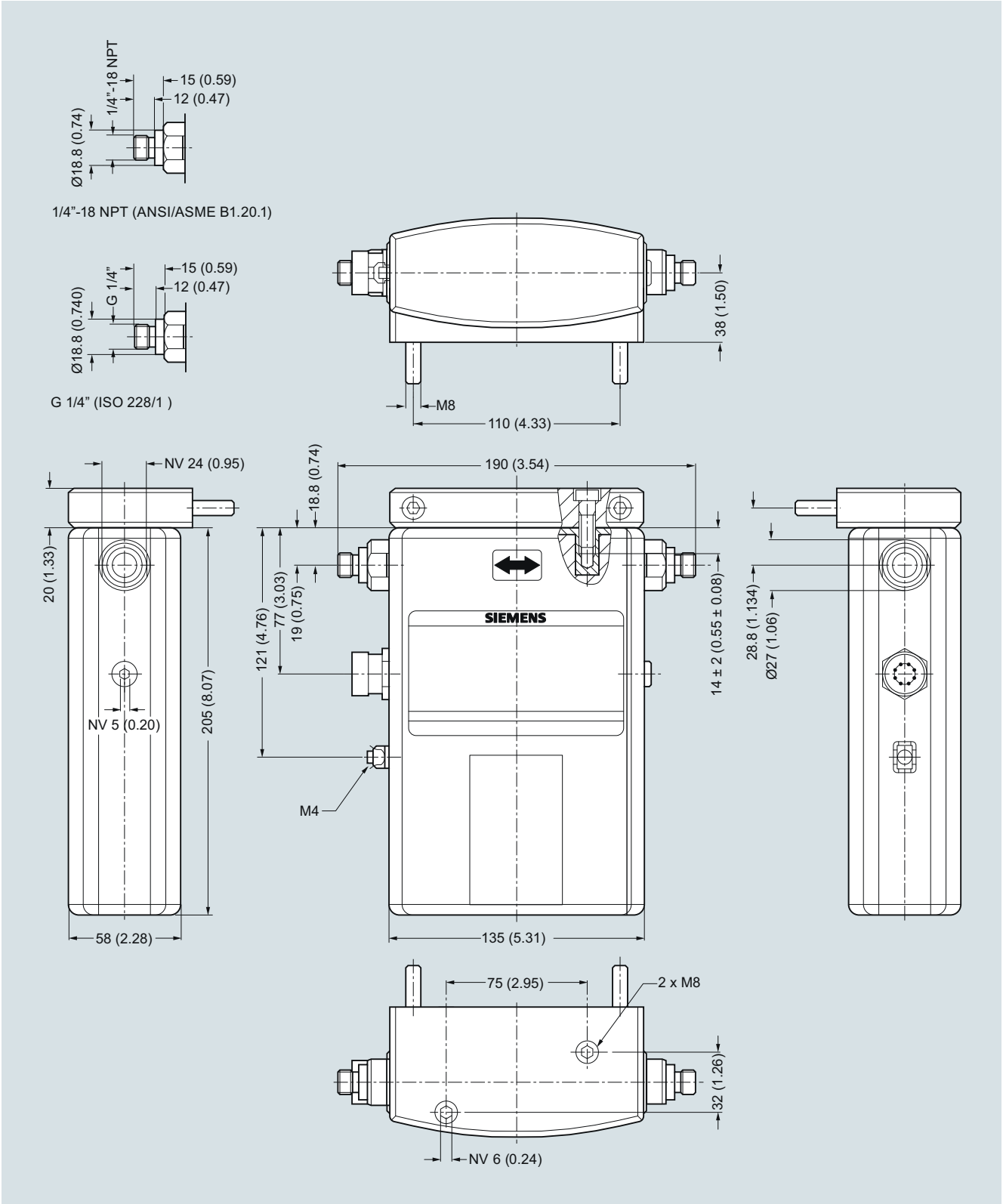

SITRANS FC300, weight 3.5 kg (7.7 lb), dimensions in mm (inch)

© Siemens 2021

Dimensional drawings (continued)

MASS 2100 sensor for analog cable connection

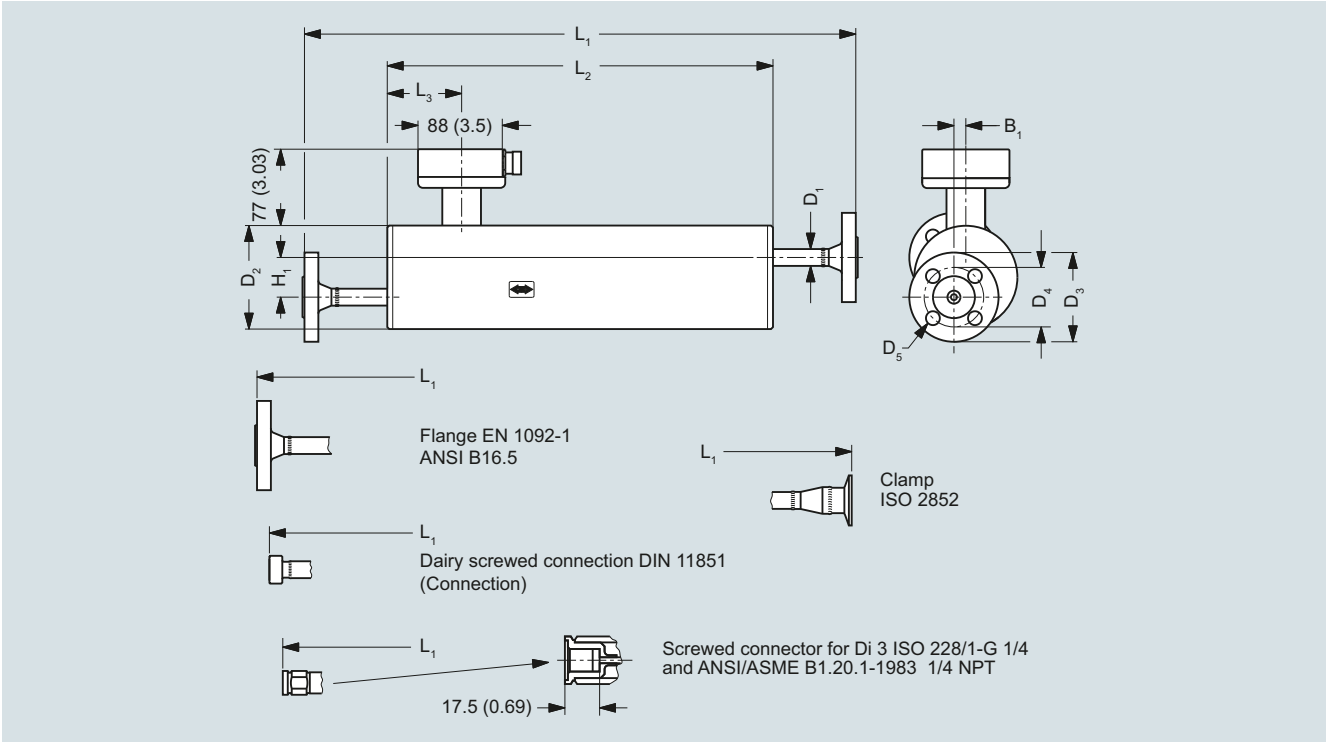

Dimensions in mm (inch)

Sensor size	Connections			L1	L2	L3	H1	B1	D1	D2	D3	D4	D5
DI (inch)	Type	Pressure rating	Size	mm (inch)									
DI 3 (1/8)	Pipe thread ISO 228/1 - G¼ (female)	PN 100	¼"	470 (18.50)	280 (11.02)	75.5 (2.97)	60 (2.36)	0	21.3 (0.84)	104 (4.09)	-	-	-
		PN 230	¼"	470 (18.50)	280 (11.02)	75.5 (2.97)	60 (2.36)	0	21.3 (0.84)	104 (4.09)	-	-	-
		PN 350	¼"	470 (18.50)	280 (11.02)	75.5 (2.97)	60 (2.36)	0	21.3 (0.84)	104 (4.09)	-	-	-
	Pipe thread ANSI/ASME B 1.20.1 - ¼" NPT (female)	PN 100	¼"	470 (18.50)	280 (11.02)	75.5 (2.97)	60 (2.36)	0	21.3 (0.84)	104 (4.09)	-	-	-
		PN 230	¼"	470 (18.50)	280 (11.02)	75.5 (2.97)	60 (2.36)	0	21.3 (0.84)	104 (4.09)	-	-	-
		PN 350	¼"	470 (18.50)	280 (11.02)	75.5 (2.97)	60 (2.36)	0	21.3 (0.84)	104 (4.09)	-	-	-

© Siemens 2021

3

Dimensional drawings (continued)

Sensor size	Connections			L1	L2	L3	H1	B1	D1	D2	D3	D4	D5
DI (inch)	Type	Pressure rating	Size	mm (inch)									
DI 6 (¼)	Pipe thread ISO 228/1 - G¼ (male)	PN 100	¼"	564 (22.20)	390 (15.35)	62 (2.44)	40 (1.57)	12 (0.47)	17 (0.67)	104 (4.09)	-	-	-
		PN 265	¼"	564 (22.20)	390 (15.35)	62 (2.44)	40 (1.57)	12 (0.47)	17 (0.67)	104 (4.09)	-	-	-
		PN 410	¼"	564 (22.20)	390 (15.35)	62 (2.44)	40 (1.57)	12 (0.47)	17 (0.67)	104 (4.09)	-	-	-
	Pipe thread ANSI/ASME B 1.20.1 - ¼" NPT (male)	PN 100	¼"	564 (22.20)	390 (15.35)	62 (2.44)	40 (1.57)	12 (0.47)	17 (0.67)	104 (4.09)	-	-	-
		PN 265	¼"	564 (22.20)	390 (15.35)	62 (2.44)	40 (1.57)	12 (0.47)	17 (0.67)	104 (4.09)	-	-	-
		PN 410	¼"	564 (22.20)	390 (15.35)	62 (2.44)	40 (1.57)	12 (0.47)	17 (0.67)	104 (4.09)	-	-	-
	Flange EN 1092-1	PN 40	DN 10	562 (22.13)	390 (15.35)	62 (2.44)	40 (1.57)	12 (0.47)	17 (0.67)	104 (4.09)	90	60	14
			DN 15	640 (25.20)	390 (15.35)	62 (2.44)	40 (1.57)	12 (0.47)	17 (0.67)	104 (4.09)	90	60	14
		PN 100	DN 10	582 (22.91)	390 (15.35)	62 (2.44)	40 (1.57)	12 (0.47)	17 (0.67)	104 (4.09)	100	70	14
			DN 15	653 (25.71)	390 (15.35)	62 (2.44)	40 (1.57)	12 (0.47)	17 (0.67)	104 (4.09)	100	70	14
	Flange ANSI B16.5	Class 150	½"	627 (24.69)	390 (15.35)	62 (2.44)	40 (1.57)	12 (0.47)	17 (0.67)	104 (4.09)	88.9	60.5	15.7
			¾"	672 (26,46)	390 (15.35)	62 (2.44)	40 (1.57)	12 (0.47)	17 (0.67)	104 (4.09)	88.9	60.5	15.7
		Class 600	½"	610 (24.02)	390 (15.35)	62 (2.44)	40 (1.57)	12 (0.47)	17 (0.67)	104 (4.09)	95.3	66.5	15.7
			¾"	695 (27.36)	390 (15.35)	62 (2.44)	40 (1.57)	12 (0.47)	17 (0.67)	104 (4.09)	95.3	66.5	15.7
	Screwed connection DIN 11851	PN 40	DN 10	534 (21.02)	390 (15.35)	62 (2.44)	40 (1.57)	12 (0.47)	17 (0.67)	104 (4.09)	-	-	-
			DN 15	574 (22.60)	390 (15.35)	62 (2.44)	40 (1.57)	12 (0.47)	17 (0.67)	104 (4.09)	-	-	-
	Clamp ISO 2852	PN 16	25 mm	572 (22.52)	390 (15.35)	62 (2.44)	40 (1.57)	12 (0.47)	17 (0.67)	104 (4.09)	-	-	-
	Hygienic screwed ISO 2853		DN 25	575 (22.64)	390 (15.35)	62 (2.44)	40 (1.57)	12 (0.47)	17 (0.67)	104 (4.09)	-	-	-

© Siemens 2021

Dimensional drawings (continued)

Sensor size	Connections			L1	L2	L3	H1	B1	D1	D2	D3	D4	D5
DI (inch)	Type	Pressure rating	Size	mm (inch)									
DN 15 (½)	Pipe thread ISO 228/1 – G½ (male)	PN 100	½"	618 (24.33)	444 (17.48)	75 (2.97)	44 (1.73)	20 (0.79)	21.3 (0.84)	129 (5.08)	-	-	-
		PN 130	½"	618 (24.33)	444 (17.48)	75 (2.97)	44 (1.73)	20 (0.79)	21.3 (0.84)	129 (5.08)	-	-	-
		PN 200	½"	618 (24.33)	444 (17.48)	75 (2.97)	44 (1.73)	20 (0.79)	21.3 (0.84)	129 (5.08)	-	-	-
	Pipe thread ANSI/ASME B 1.20.1 - ½" NPT (male)	PN 100	½"	618 (24.33)	444 (17.48)	75 (2.97)	44 (1.73)	20 (0.79)	21.3 (0.84)	129 (5.08)	-	-	-
		PN 130	½"	618 (24.33)	444 (17.48)	75 (2.97)	44 (1.73)	20 (0.79)	21.3 (0.84)	129 (5.08)	-	-	-
		PN 200	½"	618 (24.33)	444 (17.48)	75 (2.97)	44 (1.73)	20 (0.79)	21.3 (0.84)	129 (5.08)	-	-	-
	Flange EN 1092-1	PN 40	DN 15	622 (24.49)	444 (17.48)	75 (2.97)	44 (1.73)	20 (0.79)	21.3 (0.84)	129 (5.08)	95	65	14
			DN 25	724 (28.50)	444 (17.48)	75 (2.97)	44 (1.73)	20 (0.79)	21.3 (0.84)	129 (5.08)	95	65	14
		PN 100	DN 15	635 (25.00)	444 (17.48)	75 (2.97)	44 (1.73)	20 (0.79)	21.3 (0.84)	129 (5.08)	105	75	14
			DN 25	760 (29.92)	444 (17.48)	75 (2.97)	44 (1.73)	20 (0.79)	21.3 (0.84)	129 (5.08)	105	75	14
	Flange ANSI B16.5	Class 150	½"	641 (25.24)	444 (17.48)	75 (2.97)	44 (1.73)	20 (0.79)	21.3 (0.84)	129 (5.08)	88.9	60.5	15.7
			¾"	719 (25.24)	444 (17.48)	75 (2.97)	44 (1.73)	20 (0.79)	21.3 (0.84)	129 (5.08)	88.9	60.5	15.7
		Class 600	½"	661 (26.02)	444 (17.48)	75 (2.97)	44 (1.73)	20 (0.79)	21.3 (0.84)	129 (5.08)	95.3	66.5	15.7
			¾"	742 (29.21)	444 (17.48)	75 (2.97)	44 (1.73)	20 (0.79)	21.3 (0.84)	129 (5.08)	95.3	66.5	15.7
	Screwed connection DIN 11851	PN 40	DN 15	588 (23.15)	444 (17.48)	75 (2.97)	44 (1.73)	20 (0.79)	21.3 (0.84)	129 (5.08)	-	-	-
			DN 25	674 (26.54)	444 (17.48)	75 (2.97)	44 (1.73)	20 (0.79)	21.3 (0.84)	129 (5.08)	-	-	-
	Clamp ISO 2852	PN 16	DN 25	626 (24.65)	444 (17.48)	75 (2.97)	44 (1.73)	20 (0.79)	21.3 (0.84)	129 (5.08)	-	-	-
	Hygienic screwed ISO 2853		DN 25	629 (24.76)	444 (17.48)	75 (2.97)	44 (1.73)	20 (0.79)	21.3 (0.84)	129 (5.08)	-	-	-

[1] For Hastelloy L1 is 628 mm (24.72 inch)

© Siemens 2021

3

Dimensional drawings (continued)

Compact with FCT030

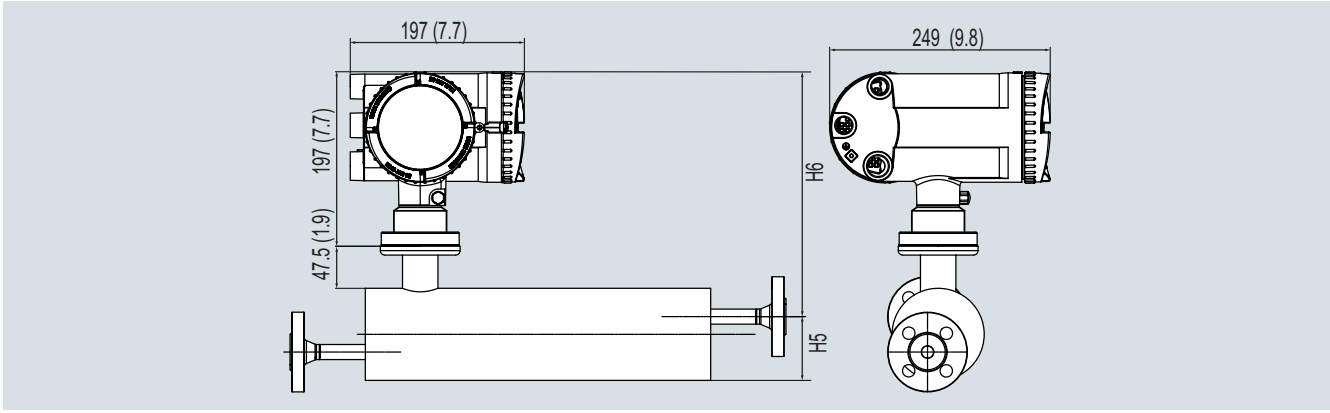

Dimensions in mm (inch)

Transmitter FCT030 remote field mount for M20 analog cable connection

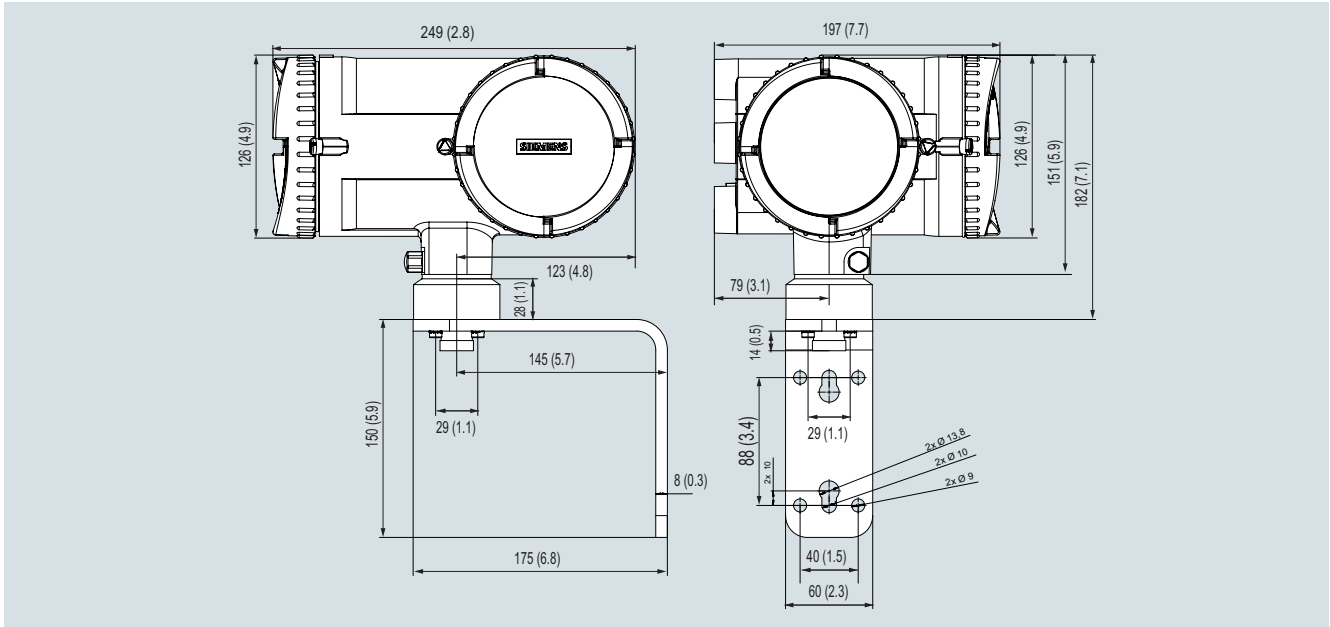

Dimensions in mm (inch)

Compact with FCT010

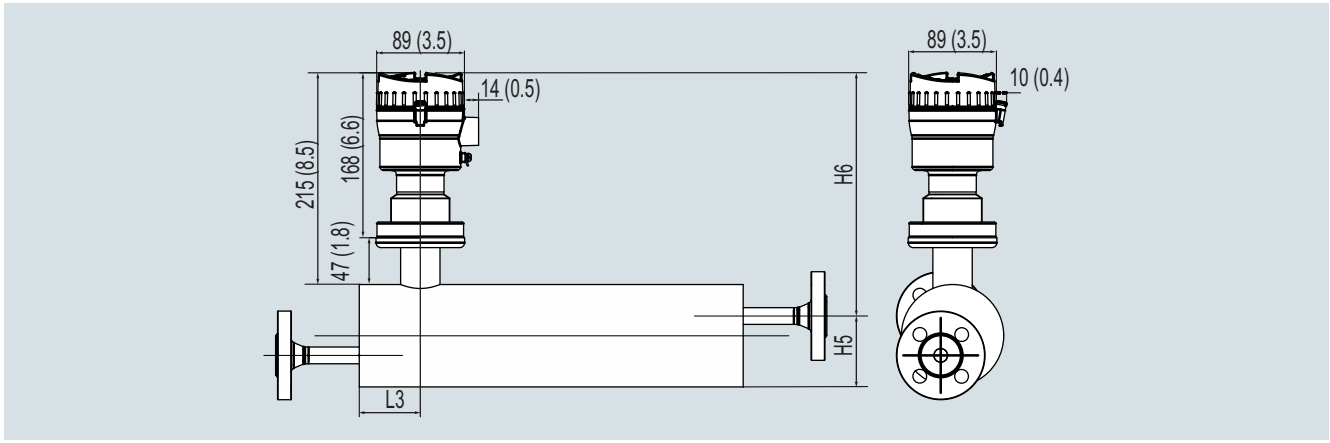

Dimensions in mm (inch)

© Siemens 2021

Dimensional drawings (continued)

MASS 2100 with FCT010 transmitter compact

Sensor size DI (inch)	L_3 mm (inch)	H_5	H_6	$H_5 + H_6$
DI 3 (1/8)	75.5 (2.97)	82 (3.23)	237 (9.33)	319 (12.56)
DI 6 (¼)	62 (2.44)	72 (2.83)	247 (9.72)	319 (12.56)
DN 15 (½)	75 (2.97)	86.5 (3.41)	257 (10.11)	343.5 (13.52)

Dimensions for the FCT010 remote mounted (for analogue cable connections for MASS 2100 / FC300 DN4)

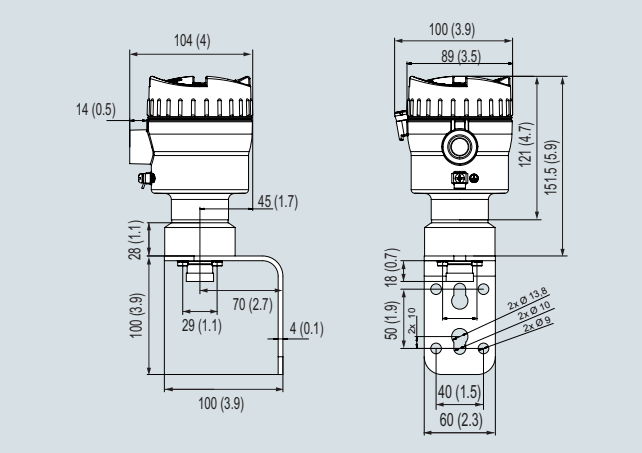

Dimensions in mm (inch)

Transmitter FCT030 remote field mount for M12 digital cable connection

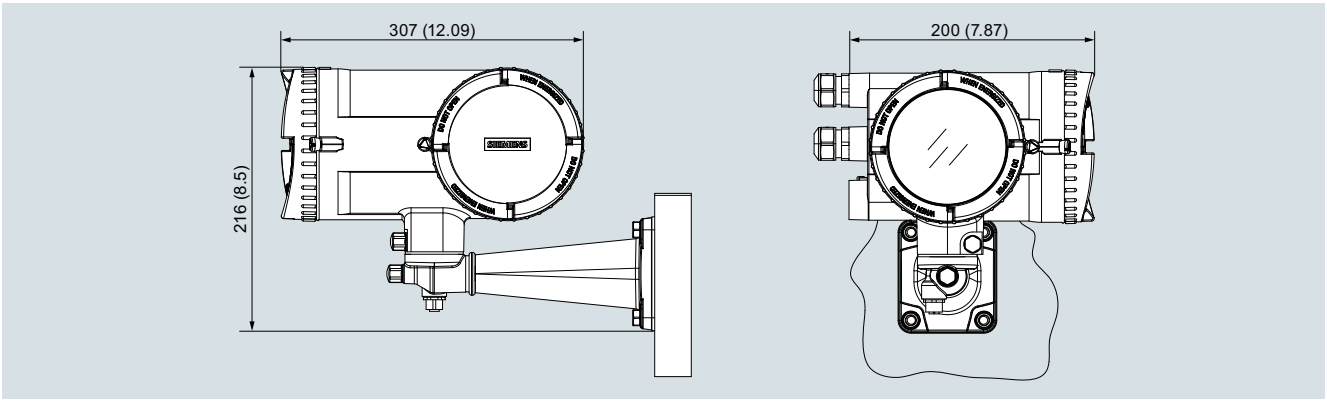

Dimensions in mm (inch)

MASS 2100 sensor with "heating jacket"

Sensor size	Connections heated			L_5	H_3	B_2	D_6	D_7	D_8
DI (inch)	Type	Pressure rating	Size	mm (inch)					
DI 3 (1/8)	EN 1092-1	PN 40	DN 15	234 (9.21)	122 (4.8)	22 (0.87)	95 (3.74)	65 (2.56)	14 (0.55)
	ANSI B16.5	Class 150	½"	234 (9.21)	131.6 (5.18)	22 (0.87)	88.9 (3.5)	60.5 (2.38)	15.7 (0.62)
DI 6 (¼)	EN 1092-1	PN 40	DN 15	234 (9.21)	112 (4.41)	22.7 (0.89)	95 (3.74)	65 (2.56)	65 (2.56)
	ANSI B16.5	Class 150	½"	234 (9.21)	121.6 (4.79)	22.7 (0.89)	88.9 (3.5)	60.5 (2.38)	60.5 (2.38)
DN 15 (½)	EN 1092-1	PN 40	DN 15	234 (9.21)	126.5 (4.98)	31.5 (1.24)	95 (3.74)	65 (2.56)	65 (2.56)
	ANSI B16.5	Class 150	½"	234 (9.21)	136.1 (5.36)	31.5 (1.24)	88.9 (3.5)	60.5 (2.38)	60.5 (2.38)

© Siemens 2021

MASS 2100 / FC300 DN 4 with FCT030 transmitter

Overview



Sensors MASS 2100 and FC300 DN 4 with FCT010 / FCT030 transmitters

The SITRANS MASS 2100 and FC300 DN 4 system consists of a SITRANS sensor and a SITRANS FCT030 transmitter.

The flowmeter comes in a compact and remote design depending for all MASS 2100 DI 3 to DI 15.

MASS 2100 DI 1.5 and FC300 DN4 are only available with analogue connection of the FCT030 transmitter.

The flowmeter is based on the latest developments within digital signal processing technology – engineered for high measuring performance:

- Fast response to rapid changes in flow
- Fast dosing applications
- High immunity against process noise
- High turndown ratio of flowrates
- Suitable for liquid and gas service
- Easy to install, commission and maintain

FCT030 is available with current output HART 7.5, Modbus RS 485 RTU, PROFIBUS DP or PROFIBUS PA as standard on Channel 1. Additional functions can be freely configured for analog, pulse, frequency, relay or status output or binary input.

The transmitter comes with a user-configurable graphical display and SensorFlash, a microSD card for configuration backup, firmware update and data storage.

Benefits

- High accuracy better than 0.1 % of mass flow rate
- Large dynamic turn-down ratio better than 500:1
- Densitometer performance available through density accuracy (depending upon sensor size) ranging from 0.0005 to 0.0015 g/cm^3 with a typical repeatability better than 0.0001 to 0.0002 g/cm^3
- Single continuous tube design, with no internal welds, reductions or flow splitters offers optimal hygiene, safety and CIP cleanability for food and beverage and pharmaceutical applications
- Markets biggest wall thickness, ensuring optimal life-time and corrosion resistance and high-pressure durability
- Balanced pipe design with little mechanical energy-loss, ensures optimal performance and stability under non-ideal and unstable process conditions (pressure, temperature, density-changes etc.)
- Full bore design provides lower pressure loss due to same internal diameter throughout the entire sensor
- 4-wire Pt1000 temperature measurement ensures optimum accuracy on mass flow, density and fraction flow
- Multi-plug electrical connector enables true “plug & play”
- Sensor pipe available in high-quality stainless steel AISI 316L/1.4435 or Hastelloy C22/2.4602 offering optimum corrosion resistance
- Centre-block design decouples process noise from the environment such as vibrations, pulsations, pressure shocks etc. making installation flexible and versatile
- Rugged and space-saving sensor design in stainless steel matching all environments
- High-pressure program as standard

© Siemens 2021

Technical specifications

Sensors MASS 2100 / FC300 DN 4 with FCT030 transmitter	
Sizes mm (inch)	MASS 2100 DI 1.5 (1/16) MASS 2100 DI 3 (1/8") MASS 2100 DI 6 (1/4") MASS 2100 DI 15 (1/2") FC300 DN 4 (1/6")
Accuracy	± 0.10 % for liquids additional ±0.40 for gases
Repeatability	± 0.05 %
Flow range Q norm (liquids)	
(water @ 1 bar pressure loss) (Q_{nom})	
• DI 1.5	19 kg/h (42 lb/h)
• DI 3	90 kg/h (198 lb/h)
• DI 6	500 kg/h (1 102 lb/h)
• DI 15	3 800 kg/h (8 370 lb/h)
• DN 4	140 kg/h (308 lb/h)
Architecture	Compact: DI 3, DI 6, DI 15 Remote digital: DI 3, DI 6, DI 15 Remote analoge: DI 1.5, DI 3, DI 6, DI 15, DN 4
Display	Full graphical display, 240 × 160 pixels with selection of 6 languages
Power supply	20 ... 90 V DC ± 10 %; 100 ... 240 V AC ± 10 %, 47 ... 63 Hz ± 10 %
Material	
• Sensor	
- Wetted parts	316L stainless steel or Hastelly C 22
- Enclosure	316L stainless steel
• Transmitter	Aluminum with corrosion-resistant coating Class C4
Enclosure rating	IP67[1)]
Pressure ratings	
• Measuring tubes	
- 316L	Up to 265 bar (3 844 psi), depending on size and process connection
- Nickel Alloy C4	Up to 410 bar (5 945 psi), depending on size and process connection
• Sensor enclosure	No pressure containment
Temperature ratings	
• Process medium	-50 ... +180 °C (-58 ... +356 °F)
• Ambient	-20 ... +50 °C (-4 ... +122 °F)[1)]

Sensors MASS 2100 / FC300 DN 4 with FCT030 transmitter	
Process connections (depending on size and pressure rating)	
• Flanges	EN 1092-1 B1, ANSI/ASME B16.5
• Pipe threads	ASME B1.20 (NPT), ISO 228
• Hygienic threads	DIN 11851, ISO 2853/BS 4825 part 4 (SS3016)
• Hygienic clamps	ISO Clamp 2852
Approvals	
• Hazardous area	ATEX, IECEx, EAC Ex, CSA, cCSAus, EAC
• Pressure equipment	PED
NAMUR	NAMUR-compliant (e.g. NE 21, NE 41, NE 107 and NE 132)
I/O	Up to 4 channels combining analog, relay or digital outputs and binary input
Communication	HART PROFIBUS PA PROFIBUS DP Modbus RTU (RS 485)
EMC performance	
• Emission	EN 55011/CISPR-11 (Class A)
• Immunity	EN/IEC 61326-1 (Industry)
Mechanical load	18 ... 1 000 Hz random The flow meter will mechanically tolerate 3.17 g RMS in all directions. Flow accuracy cannot be guaranteed under all conditions.

[1)] If operating outdoors, avoid direct sunlight, particularly in warm climatic regions.

© Siemens 2021

MASS 2100 / FC300 DN 4 with FCT030 transmitter

Selection and ordering data

Article No.

SITRANS FC sensors MASS 2100/FC300 with FCT030 transmitter ↗	7ME4813-	Ord. code
↗ Click on the Article No. for the online configuration in the PIA Life Cycle Portal.		
Sensor type and connector size		
MASS 2100 DI 1.5, 1/4"	1 G	
MASS 2100 DI 3, 1/4"	3 A	
MASS 2100 DI 3, 1/4" Heated w. DIN	3 B	
MASS 2100 DI 3,1/4" Heated w. ANSI	3 C	
FC300 DN 4, 1/4"	4 A	
MASS 2100 DI 6, 1/4"	6 A	
MASS 2100 DI 6,1/4" Heated w. EN	6 B	
MASS 2100 DI 6, 1/4" Heated w. ANSI	6 C	
MASS 2100 DI 6, DN 10	6 D	
MASS 2100 DI 6, DN 10 Heated w. EN	6 E	
MASS 2100 DI 6, DN 10 Heated w. ANSI	6 F	
MASS 2100 DI 6, DN 15 (½")	6 G	
MASS 2100 DI 6, DN 15 (½") Heated w. EN	6 H	
MASS 2100 DI 6, DN 15 (½") Heated w. ANSI	6 J	
MASS 2100 DI 6, DN 20 (¾")	6 K	
MASS 2100 DI 6, DN 20 (¾") Heated w. EN	6 L	
MASS 2100 DI 6, DN 20 (¾") Heated w. ANSI	6 M	
MASS 2100 DI 6, DN 25 (1")	6 N	
MASS 2100 DI 6, DN 25 (1") Heated w. EN	6 P	
MASS 2100 DI 6, DN 25 (1") Heated w. ANSI	6 Q	
MASS 2100 DI 15, DN 15 (½")	7 A	
MASS 2100 DI 15, DN 15 (½") Heated w. EN	7 B	
MASS 2100 DI 15, DN 15 (½") Heated w. ANSI	7 C	
MASS 2100 DI 15, DN 20 (¾")	7 D	
MASS 2100 DI 15, DN 20 (¾") Heated w. EN	7 E	
MASS 2100 DI 15, DN 20 (¾") Heated w. ANSI	7 F	
MASS 2100 DI 15, DN 25 (1")	7 G	
MASS 2100 DI 15, DN 25 (1") Heated w. EN	7 H	
MASS 2100 DI 15, DN 25 (1") Heated w. ANSI	7 J	

Article No.

SITRANS FC sensors MASS 2100/FC300 with FCT030 transmitter	7ME4813-	Ord. code
Process connection/Pressure		
No connections (spare part transmitter)	A 0	
EN 1092-1 B1, PN 40	A 1	
EN 1092-1 B1, PN 100	A 3	
ASME B16.5, RF, Class 150	D 1	
ASME B16.5, RF, Class 600	D 3	
DIN 11851 crewed connection	F 1	
ISO 2852 hygienic clamped	J 1	
ISO 2853 hygienic screwed	J 5	
ISO 228-1 pipe thread, PN 100	C 1	
ISO 228-1 ipe thread, PN 130	C 2	
ISO 228-1 pipe thread, PN 200	C 3	
ISO 228-1 ipe thread, PN 230	C 4	
ISO 228-1 ipe thread, PN 265	C 5	
ISO 228-1 pipe thread, PN 350	C 6	
ISO 228-1 pipe thread, PN 365	C 7	
ISO 228-1 pipe thread, PN 410	C 8	
NPT ASME B 1.20.1 pipe thread, PN 100	N 1	
NPT ASME B 1.20.1 pipe thread, PN 130	N 2	
NPT ASME B 1.20.1 pipe thread, PN 200	N 3	
NPT ASME B 1.20.1 pipe thread, PN 230	N 4	
NPT ASME B 1.20.1 pipe thread, PN 265	N 5	
NPT ASME B 1.20.1 pipe thread, PN 350	N 6	
NPT ASME B 1.20.1 pipe thread, PN 365	N 7	
NPT ASME B 1.20.1 pipe thread, PN 410	N 8	
Tube material (wetted) and max. operational temperature		
AISI 316L/EN 1.4435, max. 115 °C	1	
AISI 316L/EN 1.4435, max. 125 °C	2	
AISI 316L/EN 1.4435, max.180 °C	3	
Hastelloy C22/UNS N06022/EN 2.4602, max. 115 °C	5	
Hastelloy C22/UNS N06022/EN 2.4602, max. 125 °C	6	
Hastelloy C22/UNS N06022/EN 2.4602, max. 180 °C	7	
Calibration		
Mass flow calibration 2 flow x 2 points	1	
Mass flow calibration 2 flow x 2 points + density calibration	4	
Standard fraction (selectable by menu) incl density calibration	8	
Individual fraction (on demand)	9	N 0 Y

© Siemens 2021

Selection and ordering data

Selection and ordering data	Article No.													Order code
SITRANS FC sensors MASS 2100/FC300 with FCT030 transmitter	**7ME4813-**												Ord. code	
	■	■	■	■	■	-	■	■	■	■		■	■	■
Mounting style, transmitter housing and material														
Compact mounted, IP67, Aluminium transmitter housing (DI 3, DI 6 and DI 15)								**D**						
Remote field mounted, IP67, Aluminium housing, M12 socket for digital cable connection (DI 3, DI6 and DI 15 only)								**G**						
Remote field mount, IP67, Aluminium housing, terminal box for digital cable connection (DI 3, DI6 and DI 15)								**K**						
Wall mount aluminum transmitter housing, M12 socket for digital cable connection (DI 3, DI 6 and DI 15)								**U**						
Remote field mount, IP67, Aluminium transmitter housing, analog cable connection with M20 connectors								**Z**				**P**	**0**	**D**
Remote wall mount, IP67, aluminum transmitter housing, analog cable connection with M20 connectors								**Z**				**P**	**0**	**E**
Ex approvals														
Non-Ex									**A**					
ATEX Zone 1 / 21									**C**					
IECEx Zone 1 / 21 (in preparation)									**F**					
USA (FM, CSA, UL), Zone 1/Div 1									**H**					
Canada (CSA, UL), Zone 1/Div 1									**M**					
EAC Zone 1 / 21									**U**					
Local User Interface														
Blind										**1**				
Graphical, 240 × 160 pixels, glass lid										**3**				

Further designs Please add "**-Z**" to Article No. and specify Order code(s).	Order code
Cable glands	
None (mechanical sensor)	**A00**
Metric, no glands	**A01**
Metric, plastic	**A02**
Metric, brass/Ni plated	**A05**
Metric, stainless steel	**A06**
NPT, no glands	**A11**
NPT, plastic	**A12**
NPT, brass/Ni plated	**A15**
NPT, stainless steel	**A16**
Integral M12 socket	**A20**
SW functions & CT approvals	
Standard	**B11**
I/O configuration Ch1	
None (replacement sensor)	**E00**
4 ... 20 mA, HART, active/passive output (non-Ex)	**E02**
4 ... 20 mA, HART, active Ex	**E06**
4 ... 20 mA, HART, passive Ex	**E07**
PROFIBUS PA	**E10**
PROFIBUS DP	**E11**
Modbus RTU RS 485 (none-Ex)	**E14**
I/O configuration Ch2, Ch3 and Ch4	
None	**F00**
Non Ex: Sig O, None, None	**F01**
Non Ex: Sig O, Sig I/O, None	**F02**
Non Ex: Sig O, Sig I/O, Sig I/O	**F03**
Non Ex: Sig O, Sig I/O, R	**F04**
Non Ex: Sig O, R, R	**F05**
Non Ex: Sig O, R, None	**F06**
Ex: pSig O, None, None	**F11**
Ex: pSig O, pSig I/O, None	**F12**
Ex: pSig O, pSig I/O, pSig I/O	**F13**
Ex: pSig O, pSig I/O, R	**F14**
Ex: pSig O, R, R	**F15**
Ex: pSig O, R, None	**F16**
Ex: aSig O, None, None	**F21**
Ex: aSig O, aSig I/O, None	**F22**
Ex: aSig O, aSig I/O, aSig I/O	**F23**
Ex: aSig O, aSig I/O, R	**F24**
Ex: aSig O, R, R	**F25**
Ex: aSig O, R, None	**F26**

© Siemens 2021

MASS 2100 / FC300 DN 4 with FCT030 transmitter

Selection and ordering data	Order code
Further designs	
Please add "**-Z**" to Article No. and specify Order code(s).	
Certificates	
Press test certificate CRN	**C01**
Press test certificate PED	**C02**
Material certificate EN 10204-3.1	**C12**
Welding inspection report	**C13**
Factory certificate according to EN 10204 2.2	**C14**
Factory certificate according to EN 10204 2.1	**C15**
Cleaning for oil and grease/ASTM-A380	**C50**
Sensor data storage	
Sensor with SensorFlash for FCT	**S20**
Sensor with SensorProm for MASS 6000 (in preparation)	**S21**
SD-Card accessibility via USB	
(not allowed in USA by Patent)	
Mass storage enabled	**S30**
Digital cable sensor-transmitter	
None	**L50**
5 m (16.4 ft), sensor cable, 4 wire, with 2 pcs M12 plugs mounted	**L51**
5 m (16.4 ft), sensor cable, 4 wire, without plugs for terminal connection	**L52**
10 m (32.8 ft) sensor cable, 4 wire, with 2 pcs M12 plugs mounted	**L55**
10 m (32.8 ft), sensor cable, 4 wire, without plugs for terminal connection	**L56**
25 m (82 ft), sensor cable, 4 wire, with 2 pcs M12 plugs mounted	**L59**
25 m (82 ft), sensor cable, 4 wire, without plugs for terminal connection	**L60**
50 m (164 ft), sensor cable, 4 wire, with 2 pcs M12 plugs mounted	**L63**
50 m (164 ft), sensor cable, 4 wire, without plugs for terminal connection	**L64**
75 m (246 ft), sensor cable, 4 wire, with 2 pcs M12 plugs mounted	**L67**
75 m (246 ft), sensor cable, 4 wire, without plugs for terminal connection	**L68**
Analog cable sensor-transmitter	
1 m cable, analog, with 2 × M20 connectors	**L85**
2 m cable, analog with 2 × M20 connectors	**L86**
5 m cable, analog with 2 × M20 connectors	**L87**
10 m cable, analog with 2 × M20 connectors	**L88**
15 m cable, analog with 2 × M20 connectors	**L89**
Additional data	
Please add "**-Z**" to Article No. and specify Order code(s) and plain text.	
Tag name	
Tag name plate, stainless steel	**Y17**
Extended calibration	
Multi-point high, (5 flows × 2 passes), 10 ... 100 % of Q_{nom}	**Y61**
Multi-point high, (10 flows × 1 pass), 10 ... 100 % of Q_{nom}	**Y63**

Accessories for MASS 2100 and FC300 DN 4 with FCT030 transmitter

Description	Article No.	
Mounting bracket for flow sensor MASS 2100 DI 1.5	**A5E02590427**	
Mounting bracket for FC300 DN 4 in AISI 304	**A5E02590439**	

© Siemens 2021

Overview



Sensors MASS 2100 and FC300 DN 4 with FCT010 / FCT030 transmitters

The SITRANS MASS 2100 and FC300 DN 4 system consists of a SITRANS sensor and a SITRANS FCT010 transmitter. The flowmeter comes in a compact design for all MASS 2100 DI 3 to DI 15.

MASS 2100 DI 1.5 to DI 15 and FC300 DN4 are available as remote FCT010 transmitter with analogue connection. Intended for integration into OEM skids, machines or pre-assembled plant systems, the flowmeter is based on the latest developments within digital signal processing technology - engineered for high measuring performance:

- Fast response to rapid changes in flow
- Fast dosing applications with control in host system
- High immunity against process noise
- High turndown ratio of flowrates
- Suitable for liquid and gas service
- Easy to install, commission and maintain

The FCT010 transmitter delivers true multi-parameter measurements i.e. massflow, density, temperature.

FCT010 is available with Modbus RTU (RS 485) multi-drop serial communication.The flowmeter is supplied with SensorFlash, a microSD card containing all relevant certificates.

Benefits

- High accuracy better than 0.1 % of mass flow rate
- Large dynamic turn-down ratio better than 500:1
- Densitometer performance available through density accuracy (depending upon sensor size) ranging from 0.0005 to 0.0015 g/cm^3 with a typical repeatability better than 0.0001 to 0.0002 g/cm^3
- Single continuous tube design, with no internal welds, reductions or flow splitters offers optimal hygiene, safety and CIP cleanability for food and beverage and pharmaceutical applications
- Markets biggest wall thickness, ensuring optimal life-time and corrosion resistance and high-pressure durability
- Balanced pipe design with little mechanical energy-loss, ensures optimal performance and stability under non-ideal and unstable process conditions (pressure, temperature, density-changes etc.)
- Full bore design provides lower pressure loss due to same internal diameter throughout the entire sensor
- 4-wire Pt1000 temperature measurement ensures optimum accuracy on mass flow, density and fraction flow
- Multi-plug electrical connector enables true “plug & play”
- Sensor pipe available in high-quality stainless steel AISI 316L/1.4435 or Hastelloy C22/2.4602 offering optimum corrosion resistance
- Centre-block design decouples process noise from the environment such as vibrations, pulsations, pressure shocks etc. making installation flexible and versatile
- Rugged and space-saving sensor design in stainless steel matching all environments
- High-pressure program as standard

© Siemens 2021

MASS 2100 / FC300 DN 4 with FCT010 transmitter

Technical specifications

Sensors MASS 2100 / FC300 DN 4 with FCT010 transmitter	
Sizes mm (inch)	MASS 2100 DI 1.5 (1/16) MASS 2100 DI 3 (1/8") MASS 2100 DI 6 (1/4") MASS 2100 DI 15 (1/2") FC300 DN 4 (1/6")
Accuracy	± 0.10 % for liquids additional ±0.40 for gases
Repeatability	± 0.05 %
Flow range Q norm (liquids)	
(water @ 1 bar pressure loss) (Q_{nom})	
• DI 1,5	19 kg/h (42 lb/h)
• DI 3	90 kg/h (198 lb/h)
• DI 6	500 kg/h (1 102 lb/h)
• DI 15	3 800 kg/h (8 370 lb/h)
• DN 4	140 kg/h (308 lb/h)
Architecture	Compact: DI 3, DI 6, DI 15 Remote analoge: DI 1.5, DI 3, DI 6, DI 15, DN 4
Power supply	12-27 V DC; 1.1 W for Ex d: 12 – 24 V DC; Intrinsic safety power supply: Ui: 20 V, Ii: 484 mA, Pi: 2.3 W, Li: 0.6 uH, Ci: 1.9 nF.
Material	
• Sensor	
- Wetted parts	316L stainless steel or Hastelly C 22
- Enclosure	316L stainless steel
• Transmitter	Aluminum with corrosion-resistant coating Class C4
Enclosure rating	IP67[1)]
Pressure ratings	
• Measuring tubes	
- 316L	Up to 265 bar (3 844 psi), depending on size and process connection
- Nickel Alloy C4	Up to 410 bar (5 945 psi), depending on size and process connection
• Sensor enclosure	No pressure containment
Temperature ratings	
• Process medium	-50 ... +180 °C (-58 ... +356 °F)
• Ambient	-20 ... +50 °C (-4 ... +122 °F)[1)]

Sensors MASS 2100 / FC300 DN 4 with FCT010 transmitter	
Process connections (depending on size and pressure rating)	
• Flanges	EN 1092-1 B1, ANSI/ASME B16.5
• Pipe threads	ASME B1.20 (NPT), ISO 228
• Hygienic threads	DIN 11851, ISO 2853/BS 4825 part 4 (SS3016)
• Hygienic clamps	ISO Clamp 2852
Approvals	
• Hazardous area	ATEX, IECEx, EAC Ex, CSA, cCSAus, EAC
• Pressure equipment	PED
NAMUR	NAMUR-compliant (e.g. NE 21, NE 41, NE 107 and NE 132)
I/O	Up to 4 channels combining analog, relay or digital outputs and binary input
Communication	Modbus RTU (RS 485)
EMC performance	
• Emission	EN 55011/CISPR-11 (Class B)
• Immunity	EN/IEC 61326-1 (Industry)
Mechanical load	18 ... 1 000 Hz random The flow meter will mechanically tolerate 3.17 g RMS in all directions. Flow accuracy cannot be guaranteed under all conditions.

[1)] If operating outdoors, avoid direct sunlight, particularly in warm climatic regions.

© Siemens 2021

Selection and ordering data

SITRANS FC sensors MASS 2100/FC300 with FCT010 transmitter ↗	Article No. 7ME4811-	Ord. code
↗ Click on the Article No. for the online configuration in the PIA Life Cycle Portal.		
Sensor type and connector size		
MASS 2100 DI 1.5, 1/4"	1 G	
MASS 2100 DI 3, 1/4"	3 A	
MASS 2100 DI 3, 1/4" Heated w. DIN	3 B	
MASS 2100 DI 3,1/4" Heated w. ANSI	3 C	
FC300 DN 4, 1/4"	4 A	
MASS 2100 DI 6, 1/4"	6 A	
MASS 2100 DI 6,1/4" Heated w. EN	6 B	
MASS 2100 DI 6, 1/4" Heated w. ANSI	6 C	
MASS 2100 DI 6, DN 10	6 D	
MASS 2100 DI 6, DN 10 Heated w. EN	6 E	
MASS 2100 DI 6, DN 10 Heated w. ANSI	6 F	
MASS 2100 DI 6, DN 15 (½")	6 G	
MASS 2100 DI 6, DN 15 (½") Heated w. EN	6 H	
MASS 2100 DI 6, DN 15 (½") Heated w. ANSI	6 J	
MASS 2100 DI 6, DN 20 (¾")	6 K	
MASS 2100 DI 6, DN 20 (¾") Heated w. EN	6 L	
MASS 2100 DI 6, DN 20 (¾") Heated w. ANSI	6 M	
MASS 2100 DI 6, DN 25 (1")	6 N	
MASS 2100 DI 6, DN 25 (1") Heated w. EN	6 P	
MASS 2100 DI 6, DN 25 (1") Heated w. ANSI	6 Q	
MASS 2100 DI 15, DN 15 (½")	7 A	
MASS 2100 DI 15, DN 15 (½") Heated w. EN	7 B	
MASS 2100 DI 15, DN 15 (½") Heated w. ANSI	7 C	
MASS 2100 DI 15, DN 20 (¾")	7 D	
MASS 2100 DI 15, DN 20 (¾") Heated w. EN	7 E	
MASS 2100 DI 15, DN 20 (¾") Heated w. ANSI	7 F	
MASS 2100 DI 15, DN 25 (1")	7 G	
MASS 2100 DI 15, DN 25 (1") Heated w. EN	7 H	
MASS 2100 DI 15, DN 25 (1") Heated w. ANSI	7 J	
Process connection/Pressure		
No connections (spare part transmitter)	A 0	
EN 1092-1 B1, PN 40	A 1	
EN 1092-1 B1, PN 100	A 3	
ASME B16.5, RF, Class 150	D 1	
ASME B16.5, RF, Class 600	D 3	
DIN 11851 screwed connection	F 1	
ISO 2852 hygienic clamped	J 1	
ISO 2853 hygienic screwed	J 5	
ISO 228-1 pipe thread, PN 100	C 1	
ISO 228-1 pipe thread, PN 130	C 2	
ISO 228-1 pipe thread, PN 200	C 3	
ISO 228-1 pipe thread, PN 230	C 4	

SITRANS FC sensors MASS 2100/FC300 with FCT010 transmitter	Article No. 7ME4811-	Ord. code
ISO 228-1 pipe thread, PN 265	C 5	
ISO 228-1 pipe thread, PN 350	C 6	
ISO 228-1 pipe thread, PN 365	C 7	
ISO 228-1 pipe thread, PN 410	C 8	
NPT ASME B 1.20.1 pipe thread, PN 100	N 1	
NPT ASME B 1.20.1 pipe thread, PN 130	N 2	
NPT ASME B 1.20.1 pipe thread, PN 200	N 3	
NPT ASME B 1.20.1 pipe thread, PN 230	N 4	
NPT ASME B 1.20.1 pipe thread, PN 265	N 5	
NPT ASME B 1.20.1 pipe thread, PN 350	N 6	
NPT ASME B 1.20.1 pipe thread, PN 365	N 7	
NPT ASME B 1.20.1 pipe thread, PN 410	N 8	
Tube material (wetted) and max. operational temperature		
AISI 316L/EN 1.4435, max 115 °C	1	
AISI 316L/EN 1.4435, max 125 °C	2	
AISI 316L/EN 1.4435, max 180 °C	3	
Hastelloy C22/UNS N06022/EN 2.4602, max. 115 °C	5	
Hastelloy C22/UNS N06022/EN 2.4602, max. 125 °C	6	
Hastelloy C22/UNS N06022/EN 2.4602, max. 180 °C	7	
Calibration		
Mass flow calibration 2 flow × 2 points	1	
Mass flow calibration 2 flow × 2 points + density calibration	4	
Mounting style, transmitter housing and material		
Compact mounted, IP67, Aluminium transmitter housing (DI 3, DI 6 and DI 15 only)	D	
Remote mounted, IP67, Aluminium transmitter housing, analog cable connection with M20 connectors	Z	P 0 D
Ex approvals		
Non-Ex	A	
ATEX Zone 1 / 21	C	
IECEx Zone 1 / 21 (in preparation)	F	
USA (FM, CSA, UL), Zone 1/Div 1	H	
Canada (CSA, UL), Zone 1/Div 1	M	
EAC Zone 1 / 21	U	
Local User Interface		
Blind	1	

© Siemens 2021

MASS 2100 / FC300 DN 4 with FCT010 transmitter

Selection and ordering data	Order code
Futher designs	
Please add "**-Z**" to Article No. and specify Order code(s).	
Cable glands	
None (mechanical sensor)	**A00**
Metric, no glands	**A01**
Metric, plastic	**A02**
Metric, brass/Ni plated	**A05**
Metric, stainless steel	**A06**
NPT, no glands	**A11**
NPT, plastic	**A12**
NPT, brass/Ni plated	**A15**
NPT, stainless steel	**A16**
Integral M12 socket	**A20**
SW functions & CT approvals	
Standard	**B11**
I/O configuration Ch1	
Modbus RTU RS 485	**E14**
I/O configuration Ch2, Ch3 and Ch4	
None	**F00**
Certificates	
Press test certificate CRN	**C01**
Press test certificate PED	**C02**
Material certificate EN 10204-3.1	**C12**
Welding inspection report	**C13**
Factory certificate according to EN 10204 2.2	**C14**
Factory certificate according to EN 10204 2.1	**C15**
Cleaning for oil and grease/ASTM-A380	**C50**
Cleaned according to PWIS	**C51**
Digital cable sensor-transmitter	
None	**L50**
5 m (16.4 ft), sensor cable, 4 wire, with 2 pcs M12 plugs mounted	**L51**
5 m (16.4 ft), sensor cable, 4 wire, without plugs for terminal connection	**L52**
5 m (16.4 ft), sensor cable, 4 wire, with 1 pcs M12 plugs mounted	**L53**
10 m (32.8 ft) standard with M12 connectors fitted	**L55**
10 m (32.8 ft), standard, without plugs	**L56**
10 m (32.8 ft), sensor cable, 4 wire, with 1 pcs M12 plugs mounted	**L57**
25 m (82 ft), standard with M12 connectors fitted	**L59**
25 m (82 ft), standard, without plugs	**L60**
25 m (82 ft), sensor cable, 4 wire, with 1 pcs M12 plugs mounted	**L61**
50 m (164 ft), standard with M12 connectors fitted	**L63**
50 m (164 ft), standard, without plugs	**L64**
50 m (164 ft), sensor cable, 4 wire, with 1 pcs M12 plugs mounted	**L65**
75 m (246 ft), standard with M12 connectors fitted	**L67**
75 m (246 ft), standard, without plugs	**L68**
75 m (246 ft), sensor cable, 4 wire, with 1 pcs M12 plugs mounted	**L69**

	Order code
Futher designs	
Please add "**-Z**" to Article No. and specify Order code(s).	
Analog cable sensor-transmitter	
1 m cable, analog, with 2 × M20 connectors	**L85**
2 m cable, analog, with 2 × M20 connectors	**L86**
5 m cable, analog, with 2 × M20 connectors	**L87**
10 m cable, analog, with 2 × M20 connectors	**L88**
15 m cable, analog, with 2 × M20 connectors	**L89**
Additional data	
Please add "**-Z**" to Article No. and specify Order code(s) and plain text.	
Tag name	
Tag name plate, stainless steel	**Y17**
Extended calibration	
Multi-point high, (5 flows × 2 passes), 10 ... 100 % of Q_{nom}	**Y61**
Multi-point high, (10 flows × 1 pass), 10 ... 100 % of Q_{nom}	**Y63**

Accessories for MASS 2100 and FC300 DN 4 with FCT010 transmitter

Description	Article No.	
SITRANS I300 – Isolating power supply – Ex barrier	**A5E39832532**	
Mounting bracket for flow sensor MASS 2100 DI 1.5	**A5E02590427**	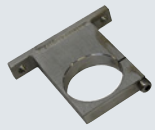
Mounting bracket for FC300 DN 4 in AISI 304	**A5E02590439**	

© Siemens 2021

Overview



Sensors MASS 2100 and FC300 DN 4 (left) with FCT070 transmitter (right)

Full integration in the Siemens SIMATIC systems PCS7 or in TIA portal with FCT070 Faceplates with the ET 200SP ST & HF powerful IO system for compact control cabinets.

The SITRANS MASS 2100 and FC300 DN 4 system consists of a SITRANS sensor and a SITRANS FCT070 transmitter.

The flowmeter comes in a compact design for all MASS 2100 DI 3 to DI 15.

MASS 2100 DI and FC300 DN 4 the DSL is remote mounted with a analogue connection.

The complete flowmeter system consists of a sensor and a SIMATIC ET 200SP ST & HF Coriolis module FCT070 transmitter.

TM FCT070 offers real-time data processing and the display of all measuring and status data of the Coriolis flowmeter.

For hazardous area the MASS 2100 and the FSC300 sensor can be placed in Ex Zone 1 or Class 1 Div 1 locations . Together with the SITRANS I300 power/barrier module the FCT070 transmitter can be place in Zone 2 or Div 2 areas.

Benefits

- High accuracy better than 0.1 % of mass flow rate
- Large dynamic turn-down ratio better than 500:1
- Densitometer performance available through density accuracy (depending upon sensor size) ranging from 0.0005 to 0.0015 g/cm^3 with a typical repeatability better than 0.0001 to 0.0002 g/cm^3
- Single continuous tube design, with no internal welds, reductions or flow splitters offers optimal hygiene, safety and CIP cleanability for food and beverage and pharmaceutical applications
- Markets biggest wall thickness, ensuring optimal life-time and corrosion resistance and high-pressure durability
- Balanced pipe design with little mechanical energy-loss, ensures optimal performance and stability under non-ideal and unstable process conditions (pressure, temperature, density-changes etc.)
- Full bore design provides lower pressure loss due to same internal diameter throughout the entire sensor
- 4-wire Pt1000 temperature measurement ensures optimum accuracy on mass flow, density and fraction flow
- Multi-plug electrical connector enables true “plug & play”
- Sensor pipe available in high-quality stainless steel AISI 316L/1.4435 or Hastelloy C22/2.4602 offering optimum corrosion resistance
- Centre-block design decouples process noise from the environment such as vibrations, pulsations, pressure shocks etc. making installation flexible and versatile
- Rugged and space-saving sensor design in stainless steel matching all environments
- High-pressure program as standard
- Full hazardous area solutions
- Easy integration into automation process control as TIA portal and PCS7
- Easy selection and integration of flow meters via TIA-Selector
- Cost effective integration of Coriolis flow meters for PLC controlled machines
- SITRANS FCT070 ET 200SP technology module and can combined with all other SIMATIC ET200 ST & HF modules
- The FCT070 has all high -end transmitter functionality integrated including the advanged fraction tables on bord
- Fast and trouble-free communication between the flow meter and the PLC through digital data communication with up to 10 ms update rate
- Integrated advanced Two-stage batch controller functionality without additional modules. I/Os are onboard

© Siemens 2021

Technical specifications

Sensors MASS 2100 / FC300 DN 4 with FCT070 transmitter	
Sizes mm (inch)	MASS 2100 DI 1.5 (1/16) MASS 2100 DI 3 (1/8") MASS 2100 DI 6 (1/4") MASS 2100 DI 15 (1/2") FC300 DN 4 (1/6")
Accuracy	± 0.10 % for liquids additional ±0.40 for gases
Repeatability	± 0.05 %
Flow range Q norm (liquids)	
(water @ 1 bar pressure loss) (Q_{nom})	
• DI 1.5	19 kg/h (42 lb/h)
• DI 3	90 kg/h (198 lb/h)
• DI 6	500 kg/h (1 102 lb/h)
• DI 15	3 800 kg/h (8 370 lb/h)
• DN 4	140 kg/h (308 lb/h)
Architecture	Remote configuration
System integration	PCS7 and TIA portal with faceplates
Power supply	24 V DC; 19.2 ... 28.8 V
Material	
• Sensor	
- Wetted parts	316L stainless steel or Hastelly C 22
- Enclosure	316L stainless steel
• Transmitter	Aluminum with corrosion-resistant coating Class C4
Enclosure rating	Sensor: IP67 FCT070 transmitter: IP20
Pressure ratings	
• Measuring tubes	
- 316L	Up to 265 bar (3 844 psi), depending on size and process connection
- Nickel Alloy C4	Up to 410 bar (5 945 psi), depending on size and process connection
• Sensor enclosure	No pressure containment
Temperature ratings	
• Process medium	-50 ... +180 °C (-58 ... +356 °F)
• Ambient	-40 ... +60 °C (-4 ... +122 °F)[1]

Sensors MASS 2100 / FC300 DN 4 with FCT070 transmitter	
Process connections (depending on size and pressure rating)	
• Flanges	EN 1092-1 B1, ANSI/ASME B16.5
• Pipe threads	ASME B1.20 (NPT), ISO 228
• Hygienic threads	DIN 11851, ISO 2853/BS 4825 part 4 (SS3016)
• Hygienic clamps	ISO Clamp 2852
Approvals	
• Hazardous area	Sensor : ATEX, IECEx, EAC Ex, CSA, cCSAus, EAC FCT070 transmitter: Zone 2 & Class 1 Div 2 ATEX, IECEx, EAC Ex, CSA, cCSAus, FM; NEPSI, EAC
• Pressure equipment	PED
NAMUR	NAMUR-compliant (e.g. NE 21, NE 41, NE 107 and NE 132)
I/O	2 digital Input and 2 digital output Single and 2 stage batch function
Communication	Integrated PROFINET for SIMATIC integration and other PROFINET Controllers
Totalizer	3 totalizer
EMC performance	
• Emission	EN 55011/CISPR-11 (Class A)
• Immunity	EN/IEC 61326-1 (Industry)
Mechanical load	18 ... 1 000 Hz random The flow meter will mechanically tolerate 3.17 g RMS in all directions. Flow accuracy cannot be guaranteed under all conditions.

[1] If operating outdoors, avoid direct sunlight, particularly in warm climatic regions.

© Siemens 2021

Selection and ordering data

SITRANS FC sensors MASS 2100/FC300 DN 4 with DSL ready for FCT070 ↗	Article No. 7ME4817-	Ord. code
↗ Click on the Article No. for the online configuration in the PIA Life Cycle Portal.		
Sensor type and connector size		
MASS 2100 DI 1.5, 1/4"	1 G	
MASS 2100 DI 3, 1/4"	3 A	
MASS 2100 DI 3, 1/4" Heated w. DIN	3 B	
MASS 2100 DI 3,1/4" Heated w. ANSI	3 C	
FC300 DN 4, 1/4"	4 A	
MASS 2100 DI 6, 1/4"	6 A	
MASS 2100 DI 6,1/4" Heated w. EN	6 B	
MASS 2100 DI 6, 1/4" Heated w. ANSI	6 C	
MASS 2100 DI 6, DN 10	6 D	
MASS 2100 DI 6, DN 10 Heated w. EN	6 E	
MASS 2100 DI 6, DN 10 Heated w. ANSI	6 F	
MASS 2100 DI 6, DN 15 (½")	6 G	
MASS 2100 DI 6, DN 15 (½") Heated w. EN	6 H	
MASS 2100 DI 6, DN 15 (½") Heated w. ANSI	6 J	
MASS 2100 DI 6, DN 20 (¾")	6 K	
MASS 2100 DI 6, DN 20 (¾") Heated w. EN	6 L	
MASS 2100 DI 6, DN 20 (¾") Heated w. ANSI	6 M	
MASS 2100 DI 6, DN 25 (1")	6 N	
MASS 2100 DI 6, DN 25 (1") Heated w. EN	6 P	
MASS 2100 DI 6, DN 25 (1") Heated w. ANSI	6 Q	
MASS 2100 DI 15, DN 15 (½")	7 A	
MASS 2100 DI 15, DN 15 (½") Heated w. EN	7 B	
MASS 2100 DI 15, DN 15 (½") Heated w. ANSI	7 C	
MASS 2100 DI 15, DN 20 (¾")	7 D	
MASS 2100 DI 15, DN 20 (¾") Heated w. EN	7 E	
MASS 2100 DI 15, DN 20 (¾") Heated w. ANSI	7 F	
MASS 2100 DI 15, DN 25 (1")	7 G	
MASS 2100 DI 15, DN 25 (1") Heated w. EN	7 H	
MASS 2100 DI 15, DN 25 (1") Heated w. ANSI	7 J	
Process connection/Pressure		
No connections (spare part transmitter)	A 0	
EN 1092-1 B1, PN 40	A 1	
EN 1092-1 B1, PN 100	A 3	
ASME B16.5, RF, Class 150	D 1	
ASME B16.5, RF, Class 600	D 3	
DIN 11851 crewed connection	F 1	
ISO 2852 hygienic clamped	J 1	
ISO 2853 hygienic screwed	J 5	
ISO 228-1 pipe thread, PN 100	C 1	
ISO 228-1 ipe thread, PN 130	C 2	
ISO 228-1 pipe thread, PN 200	C 3	
ISO 228-1 ipe thread, PN 230	C 4	
ISO 228-1 ipe thread, PN 265	C 5	
ISO 228-1 pipe thread, PN 350	C 6	
ISO 228-1 pipe thread, PN 365	C 7	
ISO 228-1 pipe thread, PN 410	C 8	
NPT ASME B 1.20.1 pipe thread, PN 100	N 1	
NPT ASME B 1.20.1 pipe thread, PN 130	N 2	
NPT ASME B 1.20.1 pipe thread, PN 200	N 3	
NPT ASME B 1.20.1 pipe thread, PN 230	N 4	
NPT ASME B 1.20.1 pipe thread, PN 265	N 5	
NPT ASME B 1.20.1 pipe thread, PN 350	N 6	
NPT ASME B 1.20.1 pipe thread, PN 365	N 7	
NPT ASME B 1.20.1 pipe thread, PN 410	N 8	
Tube material (wetted) and max. operational temperature		
AISI 316L/EN 1.4435, max. 115 °C	1	
AISI 316L/EN 1.4435, max. 125 °C	2	
AISI 316L/EN 1.4435, max. 180 °C	3	
Hastelloy C22/UNS N06022/EN 2.4602, max. 115 °C	5	
Hastelloy C22/UNS N06022/EN 2.4602, max. 125 °C	6	
Hastelloy C22/UNS N06022/EN 2.4602, max. 180 °C	7	
Calibration		
Mass flow calibration 2 flow × 2 points	1	
Mass flow calibration 2 flow × 2 points + density calibration	4	
Mounting style, transmitter housing and material		
Compact mounted, IP67, Aluminium transmitter housing (DI 3, DI 6 and DI 15)	D	
Remote field mount, IP67, Aluminium transmitter housing, analog cable connection with M20 connectors	Z	P 0 D
Ex approvals		
Non-Ex	A	
ATEX Zone 1 / 21	C	
IECEx Zone 1 / 21 (in preparation)	F	
USA (FM, CSA, UL), Zone 1/Div 1	H	
Canada (CSA, UL), Zone 1/Div 1	M	
EAC Zone 1 / 21	U	
Local User Interface		
Blind	1	

© Siemens 2021

MASS 2100 / FC300 DN 4 with FCT070 transmitter

Selection and ordering data	Order code
Further designs Please add "**-Z**" to Article No. and specify Order code(s).	
Cable glands	
None (mechanical sensor)	**A00**
Metric, no glands	**A01**
Metric, plastic	**A02**
Metric, brass/Ni plated	**A05**
Metric, stainless steel	**A06**
NPT, no glands	**A11**
NPT, plastic	**A12**
NPT, brass/Ni plated	**A15**
NPT, stainless steel	**A16**
Integral M12 socket	**A20**
SW functions & CT approvals	
Standard	**B10**
I/O configuration Ch1	
None (replacement sensor)	**E00**
I/O configuration Ch2, Ch3 and Ch4	
None	**F00**
Certificates	
Press test certificate CRN	**C01**
Press test certificate PED	**C02**
Material certificate EN 10204-3.1	**C12**
Welding inspection report	**C13**
Factory certificate according to EN 10204 2.2	**C14**
Factory certificate according to EN 10204 2.1	**C15**
Cleaning for oil and grease/ASTM-A380	**C50**
Digital cable sensor-transmitter	
None	**L50**
5 m (16.4 ft), sensor cable, 4 wire, without plugs for terminal connection	**L52**
5 m (16.4 ft), sensor cable, 4 wire, with 1 pcs M12 plugs mounted	**L53**
10 m (32.8 ft), sensor cable, 4 wire, without plugs for terminal connection	**L56**
10 m (32.8 ft), sensor cable, 4 wire, with 1 pcs M12 plugs mounted	**L57**
25 m (82 ft), sensor cable, 4 wire, without plugs for terminal connection	**L60**
25 m (82 ft), sensor cable, 4 wire, with 1 pcs M12 plugs mounted	**L61**
50 m (164 ft), sensor cable, 4 wire, without plugs for terminal connection	**L64**
50 m (164 ft), sensor cable, 4 wire, with 1 pcs M12 plugs mounted	**L65**
75 m (246 ft), sensor cable, 4 wire, without plugs for terminal connection	**L68**
75 m (246 ft), sensor cable, 4 wire, with 1 pcs M12 plugs mounted	**L69**

	Order code
Further designs Please add "**-Z**" to Article No. and specify Order code(s).	
Analog cable sensor-transmitter	
1 m cable, analog, with 2 × M20 connectors	**L85**
2 m cable, analog with 2 × M20 connectors	**L86**
5 m cable, analog with 2 × M20 connectors	**L87**
10 m cable, analog with 2 × M20 connectors	**L88**
15 m cable, analog with 2 × M20 connectors	**L89**
Additional data Please add "**-Z**" to Article No. and specify Order code(s) and plain text.	
Tag name	
Tag name plate, stainless steel	**Y17**
Extended calibration	
Multi-point high, (5 flows × 2 passes), 10 ... 100 % of Q_{nom}	**Y61**
Multi-point high, (10 flows × 1 pass), 10 ... 100 % of Q_{nom}	**Y63**

Description	Article No.	
SITRANS FCT070 **Transmitter for ET 200SP**	**7ME4138-6AA00-0BB1**	
BU20-P12+A0+4B, PU1 **Baseunit plate for ET 200SP**	**6ES7193-6BP20-0BB0** **6ES7193-6BP20-0BB1**	
SITRANS I300 **Isolating power supply – Ex barrier**	**A5E39832532**	

Accessories for MASS 2100 and FC300 DN 4 with FCT070 transmitter

Description	Article No.	
Mounting bracket for flow sensor MASS 2100 DI 1.5	**A5E02590427**	
Mounting bracket for FC300 DN 4 in AISI 304	**A5E02590439**	

© Siemens 2021

Selection and ordering data

Accessories and spare parts for flowmeters

Description	Article No.	
CT connector Tamper cover for CT locking. Fits over the M12 connector at both sensor and transmitter ends of the remote system cable (2 pcs.)	**A5E31478498**	
Bag of glands (metric) in black plastic[1]	**A5E03907414**	
Bag of glands, (metric) in gray plastic Ex e/i[1]	**A5E03907424**	
Bag of glands (metric) in AISI 316 SS Ex e/i[1]	**A5E03907429**	
Bag of glands (metric) in Ni-plated brass Ex e/i[1]	**A5E03907430**	
Bag of glands (NPT) in black plastic[2]	**A5E03907435**	
Bag of glands (NPT) in gray plastic Ex e/i[2]	**A5E03907451**	
Bag of glands (NPT) in AISI 316 SS Ex e/i[2]	**A5E03907467**	
Bag of glands (NPT) in Ni-plated brass Ex e/i[2]	**A5E03907473**	
Standard cable (non-Ex) with 2 x M12 connectors, PO insulation and PUR sleeve, gray, -40 ... +80 °C (-40 ... +176 °F)		
• 5 m (16.4 ft)	**A5E03914805**	
• 10 m (32.8 ft)	**A5E03914850**	
• 25 m (82 ft)	**A5E03914853**	
• 50 m (164 ft)	**A5E03914859**	
• 75 m (246 ft)	**A5E03914861**	
• 150 m (492 ft)	**A5E03914874**	
Standard cable (non-Ex) for termination, PO insulation and PUR sleeve, gray, -40 ... +80 °C (-40 ... +176 °F)		
• 5 m (16.4 ft)	**A5E03914833**	
• 10 m (32.8 ft)	**A5E03914849**	
• 25 m (82 ft)	**A5E03914854**	
• 50 m (164 ft)	**A5E03914856**	
• 75 m (246 ft)	**A5E03914864**	
• 150 m (492 ft)	**A5E03914873**	

Description	Article No.	
Standard cable (non-Ex) f with M12 connector on one side, PO insulation and PUR sleeve, gray, -40 ... +80 °C (-40 ... +176 °F)		
• 5 m (16.4 ft)		
• 10 m (32.8 ft)		
• 25 m (82 ft)		
• 50 m (164 ft)		
• 75 m (246 ft)		
• 150 m (492 ft)		
Standard cable (Ex) with 2 x M12 connectors, PO insulation and PUR sleeve, blue, -40 ... +80 °C (-40 ... +176 °F)		
• 5 m (16.4 ft)	**A5E03914929**	
• 10 m (32.8 ft)	**A5E03914962**	
• 25 m (82 ft)	**A5E03914995**	
• 50 m (164 ft)	**A5E03915004**	
• 75 m (246 ft)	**A5E03915074**	
• 150 m (492 ft)	**A5E03915088**	
Standard cable (Ex) for termination, PO insulation and PUR sleeve, blue, -40 ... +80 °C (-40 ... +176 °F)		
• 5 m (16.4 ft)	**A5E03914945**	
• 10 m (32.8 ft)	**A5E03914973**	
• 25 m (82 ft)	**A5E03914984**	
• 50 m (164 ft)	**A5E03915015**	
• 75 m (246 ft)	**A5E03915057**	
• 150 m (492 ft)	**A5E03915100**	
Standard cable (Ex) with M12 connector on one side, PO insulation and PUR sleeve, blue, -40 ... +80 °C (-40 ... +176 °F)		
• 5 m (16.4 ft)		
• 10 m (32.8 ft)		
• 25 m (82 ft)		
• 50 m (164 ft)		
• 75 m (246 ft)		
• 150 m (492 ft)		
Analog signal cable For analog cable connection between MASS 2100/ FC300 sensor and FCT010/FCT030/FCT070 transmitters. 5 × 2 × Ø 0.34 mm screened and twisted in pairs. Blue PVC insulation and sleeve. With two M20 connectors, female/female. -20 ... 105 °C (-4 ... +221 °F), Ex		
• 1 m (3.28 ft)	**A5E42815465**	
• 2 m (6.56 ft)	**A5E42521862**	
• 5 m (16.4 ft)	**A5E42522447**	
• 10 m (32.8 ft)	**A5E42523233**	
• 15 m (49.21 ft)	**A5E42523347**	

[1] 2 pcs M20; 1 pce M25 with single and dual cable inserts.

[2] 2 pcs ½" NPT; 1 pce ½" NPT with single and dual cable inserts.

© Siemens 2021

3

Selection and ordering data (continued)

Heating jacket for FCS400

Description	Article No.	
Heating jacket, indoor use, 0 ... 200 °C (32 ...392 °F) max. temperature. Complete with 5 m (16.4 ft) high temperature cable fitted. Dedicated plug connection to included controller		
• 230 V AC		
- DN 15 electric	**A5E33035287**	
- DN 25 electric	**A5E33035324**	
- DN 50 electric	**A5E33035325**	
• 115 V AC		
- DN 15 electric	**A5E32877520**	
- DN 25 electric	**A5E32877556**	
- DN 50 electric	**A5E32877557**	
Heating jacket controller, IP65. Digital display for 0 ... 200 °C (32 ...392 °F) control setpoint		
• 230 V AC	**A5E03839193**	
• 115 V AC	**A5E03839194**	

Spare parts - sensor FCS400/FCS300 and MASS 2100/FC300

Description	Article No.	
Blind lid in painted aluminum with silicone o-ring seal	**A5E03549295**	
Sensor housing		
• Metric	**A5E03549313**	
• NPT	**A5E03906080**	
Bag of loose parts for sensor; including cable strain relief components, washer, seals, silicone o-rings, and assorted screws	**A5E03549324**	
M12 option for sensor housing in stainless steel. Pre-wired and potted to replace M12 socket in DSL housing	**A5E03906095**	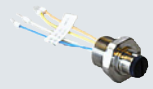

Spare parts - Transmitter FCT030 field mount enclosure (all FW versions)

Description	Article No.	
Display lid in painted aluminum with Ex glass plate and silicone o-ring seal Ex and Non-Ex	**A5E03549344**	
Blind lid in painted aluminum with silicone o-ring seal	**A5E03549429**	
Bag of loose spare parts; including cable strain relief components, mounting tool, seals and gasket, assorted screws and washers, hex cap nut, blind connectors, and silicone o-rings	**A5E03549396**	
Mounting bracket - FCT030 field mount; in painted aluminum for pipe or wall mounting of transmitter FCT030 remote version. Including lock ring, pressure pads and seal cap	**A5E03906091**	
M12 option - remote - in painted aluminum. Pre-wired and potted replacement M12 connection for FCT030 field mount transmitter remote version	**A5E03906104**	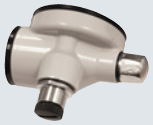
Remote terminal house painted aluminum for sensor cable termination at FCT030 transmitter remote version. Pre-wired and potted		
• M20	**A5E03906112**	
• NPT	**A5E03906130**	

© Siemens 2021

Selection and ordering data (continued)

Spare parts - Transmitter FCT030 (FW 3.1)

Description	Article No.	
Display and keypad assembly for field mount enclosure, with Siemens logo. For HW 2 and FW 3.1 version	**A5E03548971**	
Sensor cassette (compact) (HW version 2, FW 3.1.x)	**A5E03549142**	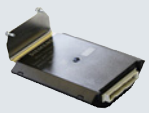
Sensor cassette (remote) (HW version 2, FW 3.1.x)	**A5E03549098**	
Frontend cassette Spare part frontend cassette for remote version of FC430 and cassette for FC410 For firmware V 3.x	**A5E03549191**	
Power supply for field mount enclosure 100 ... 240 V AC, 47 ... 63 Hz, 24 ... 90 V DC (HW version 2 and FW 3.1.x)	**A5E03549413**	
Transmitter cassette (active) 4 ... 20 mA output and HART 7.2 (HW version 2 and FW 3.1.x)	**A5E03549357**	
Transmitter cassette (passive) 4 ... 20 mA output and HART 7.2 (HW version 2 and FW 3.1.x)	**A5E03549383**	
I/O assembly Advise Order code F40 to F97, Selection and Ordering data[1)]	**A5E03939114**	
SensorFlash (micro SD card 1G)	**A5E03915258**	

[1)] The I/O configuration must be stated in the "Remark" field.
The I/O configuration is found in the F option of the ordering code. e.g. code “F40” for ordering Ch2 Active Current/Freq/Pulse, Ch3 Active Current/Freq/Pulse, Ch4 Active Input.

Spare parts FCT030 - Fieldmount enclosure (FW 4.0)

Description	Article No.	
Display and keypad assembly • From firmware 4.0, with Siemens logo	**A5E37705139**	
• From firmware 4.0, neutral version - no company logo	**A5E39844362**	
Power supply for field mount enclosure FCT030 V 4.0 Fieldmount 100 ... 240 V AC, 47 ... 63 Hz 19.2 ... 28.8 V DC	**A5E38264471**	
Sensor cassette (compact) for systems without DSL and for systems with analog sensor connection, HW version 3, FW version 4.0	**A5E41526318**	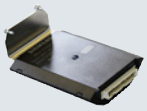
Sensor cassette (remote) Ex barrier module digital sensor connection (HW version 3, FW version 4.0)	**A5E03549098**	
Sensor cassette (remote) for systems with DSL, HW version 3, FW version 4.0	**A5E03549098**	
Frontend cassette Spare part frontend DSL for remote version. For firmware V 4.0	**A5E41526286**	
SensorFlash (micro SD card 4G)	**A5E38288507**	
Transmitter cassette for firmware 4.0 • Ch1 E02: I/O and comm (active/passive) 4 ... 20 mA output and HART 7.5, Non-Ex	**A5E38013040**	
• Ch1 E06: I/O and comm (-active) 4 ... 20 mA output and HART 7.5, Ex	**A5E38012278**	
• Ch1 E07: I/O and comm (-passive) 4 ... 20 mA output and HART 7.5, Ex	**A5E38013025**	
• Ch1 E10: Communication PROFIBUS PA, Non-Ex & Ex	**A5E41216315**	
• Ch1 E11: Communication PROFIBUS DP, Non-Ex	**A5E41216042**	
• Ch1: Communication Modbus RTU 485, Ex	**A5E38013054**	
• Ch1: Communication Modbus RTU 485, Non-Ex	**A5E38013069**	

© Siemens 2021

3

Selection and ordering data (continued)

Description	Article No.	
I/O Cassette for firmware 4.0		
• Ch2: Current/Frequ./Pulse, Ch3: None, Ch4: None, F01, Non-Ex	**A5E38006256**	
• Ch2: Current/Frequ./Pulse, Ch3: Current/Frequ./Pulse, Ch4: None, F02, Non-Ex	**A5E38006558**	
• Ch2: Current/Frequ./Pulse, Ch3: Current/Frequ./Pulse, Ch4: Current/Frequ./Pulse, F03, Non-Ex	**A5E38006598**	
• Ch2: Current/Frequ./Pulse, Ch3: Current/Frequ./Pulse, Ch4: Relay, F04, Non-Ex	**A5E38006896**	
• Ch2: Current/Frequ./Pulse, Ch3: Relay, Ch4: Relay, F05, Non-Ex	**A5E38006900**	
• Ch2: Current/Frequ./Pulse, Ch3: Relay, Ch4: None, F06, Non-Ex	**A5E38011432**	
• Ch2: Current/Frequ./Pulse, Ch3: None, Ch4: None, F11, Ex-passive	**A5E38011478**	
• Ch2: Current/Frequ./Pulse, Ch3: Current/Frequ./Pulse, Ch4: None, F12, Ex-passive	**A5E38011509**	
• Ch2: Current/Frequ./Pulse, Ch3: Current/Frequ./Pulse, Ch4: Current/Frequ./Pulse, F13, Ex-passive	**A5E38011541**	
• Ch2: Current/Frequ./Pulse, Ch3: Current/Frequ./Pulse, Ch4: Relay, F14, Ex-passive	**A5E38011600**	
• Ch2: Current/Frequ./Pulse, Ch3: Relay, Ch4: Relay, F15, Ex-active	**A5E38011618**	
• Ch2: Current/Frequ./Pulse, Ch3: Relay, Ch4: None, F16, Ex-active	**A5E38011908**	
• Ch2: Current/Frequ./Pulse, Ch3: None, Ch4: None, F21, Ex-active	**A5E38012039**	
• Ch2: Current/Frequ./Pulse, Ch3: Current/Frequ./Pulse, Ch4: None, F22, Ex-active	**A5E38012056**	
• Ch2: Current/Frequ./Pulse, Ch3: Current/Frequ./Pulse, Ch4: Current/Frequ./Pulse, F23, Ex-active	**A5E38012121**	
• Ch2: Current/Frequ./Pulse, Ch3: Relay, Ch4: Relay, F24, Ex-active	**A5E38019235**	
• Ch2: Current/Frequ./Pulse, Ch3: Current/Frequ./Pulse, Ch4: Relay, F25, Ex-passive	**A5E38019263**	
• Ch2: Current/Frequ./Pulse, Ch3: Relay, Ch4: None, F26, Ex-passive	**A5E38019378**	

Description	Article No.	
Adapter cable for FCS400 sensor with new transmitter DSL/FCT010/FCT030 Version 4.0	**A5E50371933**	
Remote adapter for wall bracket M20 cable connection		
• Ex	**A5E42404417**	
• Non-Ex	**A5E42846478**	
Wall bracket for FCT030 for M20 analog cable connector	**A5E42404426**	
Wall bracket for FCT010 for M20 analog cable connector	**A5E42404447**	
Compact adapter for DSL/FCT030 For upgrade from MASS 2100 DI 3, DI 6, DI 15 with MASS 6000 compact to DSL/FCT030		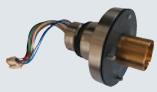
• Ex	**A5E42846758**	
• Non-Ex	**A5E42846760**	
Compact adapter for DSL/FCT030 FCS300 and FCS400 (DN 100 and DN 150 sensor) adapter for compact mount DSL, FCT010 or FCT030 Ex and Non-Ex	**TBD**	

© Siemens 2021

Selection and ordering data (continued)

Spare parts - FCT030 wall mount enclosure

Description	Article No.	
Display and keypad -assembly • For wall mount enclosure, Siemens logo	**A5E37697615**	
• For wall mount enclosure, neutral version	**A5E39844261**	
Power supply for wall mount 100 ... 240 V AC, 47 ... 63 Hz 19.2 ... 28.8 V DC	**A5E38263021**	
Sensor cassette for FCT030 wall mounting enclosure	**TBD**	
Foam insert set for wall mount with connectors	**A5E38287828**	
Wall mount enclosure front Versions: • blind, Siemens version • blind, neutral version - no company logo • with glass	**A5E**	

Description	Article No.	
Wall mount enclosure bracket for pipe mounting	**A5E38288020**	
Wall bracket panel mounting	**A5E38288032**	
Bag of loose spare parts for wall mount including cable strain relief components, mounting tool, seals and gasket, assorted screws and washers, hex cap nut, blind connectors and O-rings	**A5E38288072**	
Metall kit PSU cover back pane for wall mount enclosure	**A5E38415145**	
Power input cover plate for wall mount enclosure	**A5E38415205**	

© Siemens 2021

MASS 6000 Generation - Spare parts

Overview



MASS 6000 is based on digital signal processing technology – engineered for high performance, fast flow step response, fast batching applications, high immunity against process noise, easy to install, commission and maintain.

This product is not longer available. Repair and spare parts for MASS 6000 (all models and variants) can still be ordered. See spare part list.

Selection and ordering data

Accessories and spare parts for MASS 6000 generation

Description	Article No.	
Cable with multiple plug Standard blue cable between MASS 6000 and MASS 2100, 5 × 2 × 0.34 mm^2 twisted and screened in pairs. Temperature range -20 ... +110 °C (-4 ... +230 °F)		
• 5 m (16.4 ft)	**FDK:083H3015**	
• 10 m (32.8 ft)	**FDK:083H3016**	
• 25 m (82 ft)	**FDK:083H3017**	
• 50 m (164 ft)	**FDK:083H3018**	
• 75 m (246 ft)	**FDK:085U0229**	
• 150 m (492 ft)	**FDK:083H3055**	

Description	Article No.	
Adapter for MASS 2100 M23 electrical adapter for MASS 2100 DI 3, DI 6, DI 15, DI 25 and DI 40	**FDK:083L8889**	
M20 connector for cable mounting	**FDK:083H5056**	
2 kB SENSORPROM unit, including programming (Sensor Serial No. and Article No. must be specified by ordering)	**FDK:083H4410**	

Description	Article No.	
Cable glands, screwed entries type in polyamide **100 °C (212 °F), black, 2 pcs.**		
• M20	**A5E00822490**	
• ½" NPT	**A5E00822501**	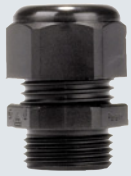
Sun lid for MASS 6000 transmitter (frame and lid)	**A5E02328485**	

Add-on module

Description	Article No.	
HART[1]	**FDK:085U0226**	
PROFIBUS PA Profile 3[1]	**FDK:085U0236**	
PROFIBUS DP Profile 3	**FDK:085U0237**	
MODBUS RTU RS 485	**FDK:085U0234**	
FOUNDATION Fieldbus H1[1]	**A5E02054250**	
DeviceNet	**FDK:085U0229**	

[1] Modules are rated Ex i when used with MASS 6000 Ex d.

© Siemens 2021

Selection and ordering data (continued)

Spare parts for compact or remote IP67 version

Description	Article No.	
MASS 6000 transmitter IP67/NEMA 6 Note: No CE decleration Fibre glass reinforced polyamide and without connection board 1 current output 1 frq./pulse output 1 relay output • 115/230 V AC, 50/60 Hz • 24 V AC/DC	**7ME4110-1AA10-1AA0** **7ME4110-1AA20-1AA0**	
Wall mounting unit for IP67/NEMA 6 version with wall bracket, without connection board but with • 4 × M20 cable glands • 4 × ½" NPT cable glands	**FDK:085U1018** **A5E01164211**	
Connection board/PCB Supply voltage: 115/230 V/24 V AC/DC	**FDK:083H4260**	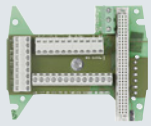
Terminal box kit • M20 cable glands • ½" NPT cable glands Change from remote to safe area compact mounting of MASS 6000 IP67/NEMA 6 with MASS 2100. The kit consists of a terminal box in polyamide incl. connection board, cable and connector between PCB and sensor pedestal, PCB, seal and screws (4 pcs.) for mounting on sensor. Not approved for hazardous locations	**A5E00832338** **A5E00832342**	
Terminal box, in polyamide, inclusive lid • M20 cable glands • ½" NPT cable glands Not approved for hazardous locations	**FDK:085U1050** **FDK:085U1052**	
Terminal box - lid in polyamide	**FDK:085U1003**	
Display and keypad • Siemens Front	**FDK:085U1039**	

Add-on spare parts required due to RoHs directives and EoL for EU and EU related countries

Description	Article No.
MASS 6000 IP67 Spare part PCB main • 230 V • 24 V	 **A5E41718138** **A5E41718346**
MASS 6000 19"/IP20 Spare part PCB main • 1 current, 230 V • 3 current, 230 V • 1 current, 24 V • 3 current, 24 V	 **A5E43226138** **A5E43226145** **A5E43226154** **A5E43226168**
MASS 6000 19"/IP20 Ex Spare part PCB main • 1 current, 230 V • 3 current, 230 V • 1 current, 24 V • 3 current, 24 V	 **A5E43226277** **A5E43226342** **A5E43226441** **A5E43226455**
MASS 6000 Ex d, spare part PCB Stainless steel, without module	**FDK:083H3061**
MASS 6000 Ex d, spare part barriere Stainless steel	**A5E41718720**
MASS 6000 19"/IP20, barriere PCB, Ex	**A5E41718669**
MASS 6000 Ex d, connection board Stainless steel	**A5E41718522**

© Siemens 2021

3

Selection and ordering data (continued)

Accessories

Enclosure (without PCB, connection board)

Description	Article No.	
IP66/NEMA 4X, wall mounting enclosure for 19" inserts, 21 TE	**FDK:083F5037**	

Enclosure

Description	Article No.	
Panel mounting enclosure for 19“ insert (21 TE); IP65/NEMA 2 enclosure in ABS plastic for front panel mounting	**FDK:083F5030**	
Panel mounting enclosure for 19“ insert (42 TE); IP65/NEMA 2 enclosure in ABS plastic for front panel mounting	**FDK:083F5031**	
Back of panel mounting enclosure for 19“ insert (21 TE); IP20/NEMA 1 enclosure in aluminum	**FDK:083F5032**	
Back of panel mounting enclosure for 19“ insert (42 TE); IP20/NEMA 1 enclosure in aluminum	**FDK:083F5033**	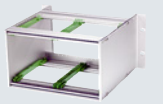
Front cover (7 TE) for panel mounting enclosure	**FDK:083F4525**	

Connection boards/PCB for MASS 6000 and MASS 2100 sensors

Description	Article No.	
Connection board MASS 6000 for 19" IP20 rack mounting version • 24 V, 115/230 V	**FDK:083H4272**	
Connection board MASS 6000 Ex [ia] IIC for 19" IP20 rack mounting version • 24 V, 115/230 V	**FDK:083H4273**	
Connection board MASS 6000 for 19" wall mounting version, for enclosure FDK:083F5037/FDK:083F5038 • 24 V, 115/230 V	**FDK:083H4274**	
Connection board MASS 6000 Ex [ia] IIC for 19" wall mounting version, for enclosure FDK:083F5037/FDK:083F5038 • 24 V, 115/230 V	**FDK:083H4275**	

Connection boards/PCB for MASS 6000 and MC2 sensors

Description	Article No.	
Connection board MASS 6000 for 19" IP20 rack mounting version • 24 V, 115/230 V	**FDK:083H4272**	
Connection board MASS 6000 for Ex application[1] and 19" IP20 rack mounting version (connection board MASS 6000 to MC2 sensors Ex-approved) • 24 V, 115/230 V	**FDK:083H4294**	
Connection board MASS 6000 for 19" wall mounting version, for enclosure FDK:083F5037/FDK:083F5038 • 24 V, 115/230 V	**FDK:083H4274**	
Connection board MASS 6000 for Ex application1) and 19" wall mounting version (connection board MASS 6000 to MC2 sensors Ex-approved), for enclosure FDK:083F5037/FDK:083F5038 • 24 V, 115/230 V	**FDK:083H4295**	

[1] Attention (Ex application): MC2 Ex version sensors must only be connected to connection board FDK:083H4294 or FDK:083H4295.

Description	Article No.	
Wall mounting enclosure in ABS plastic IP65 with connection board/PCB for Ex application connected to MC2 Ex sensors	**FDK:083H4296**	

© Siemens 2021

Selection and ordering data (continued)

Spare parts 19" versions

Enclosure (without PCB, connection board)

Description	Article No.	
IP66/NEMA 4X, wall mounting enclosure for 19" inserts (without back plates). Use with PCB A5E02559813 or A5E02559814		
• 21 TE	**FDK:083F5037**	
• 42 TE	**FDK:083F5038**	
Display unit for 19" versions Order the Display and Keypad accessory from MASS 6000 IP67 compact/remote (FDK:085U1039) and use the display part only for replacement	**FDK:083U1039**	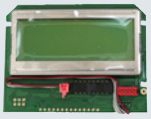

Accessories

Add-on module for remote and compact MASS 6000 Ex d

Description	Article No.	
HART (Ex-i)	**FDK:085U0226**	
PROFIBUS PA Profile 3 (Ex-i)	**FDK:085U0236**	
FOUNDATION Fieldbus H1 (Ex-i)	**A5E02054250**	

Operating instructions for SITRANS F add-on modules

Description	Article No.
HART	
• English	**A5E03089708**
Profibus PA/DP	
• English	**A5E00726137**
• German	**A5E01026429**
MODBUS	
• English	**A5E00753974**
• German	**A5E03089262**
FOUNDATION Fieldbus	
• English	**A5E02318728**
• German	**A5E02488856**
DeviceNet	
• English	**A5E03089720**

This device is shipped with Safety Notes and a DVD containing further SITRANS F C literature.

All literature is available to download for free, in a range of languages, at

www.siemens.com/processinstrumentation/documentation

© Siemens 2021

SIFLOW FC070

Overview



SIFLOW FC070 is based on the SIMATIC S7-300 and the MASS 6000 technology.

The SIFLOW FC070 transmitter can be analogue connected with the Sitrans FC MASS 2100 DI 1.5, DI 3, DI 6, DI 15 and the FC300 DN4.

SIFLOW FC070 is available in two versions:

- SIFLOW FC070 Standard
- SIFLOW FC070 Ex & CT

The SIFLOW FC070 transmitter delivers true multi-parameter measurements i.e. mass flow, volume flow, density, temperature and fraction.

SIFLOW FC070 is designed for integration in a variety of automation systems, i.e.:

- Central mounted in S7-300, C7
- Decentralized in ET 200M for use with S7-300 and S7-400 as PROFIBUS DP/PROFINET masters
- Decentralized in ET 200M for use with any automation system using standardized PROFIBUS DP/PROFINET masters
- Stand-alone via a Modbus RTU master, i.e. SIMATIC PDM

Benefits

- Easy integration in SIMATIC S7 and PCS 7
- Support of SIMATIC PDM configuration tool via Modbus
- Dedicated mass flow chip with high-performance ASIC technology
- True 30 Hz update rate securing fast batching and step response
- Superior noise immunity due to a DFT (Discrete Fourier Transformation) algorithm
- Front end resolution better than 0.35 ns improves zero point stability and enhances dynamic turn-down ratio on flow and density accuracy
- Built-in batch controller with two-stage control and compensation
- Digital outputs for direct batch control, frequency/pulse
- Modbus RTU RS 232/485 interface for connection to SIMATIC PDM or any other Modbus master
- Digital input for batch control, zero adjust
- Multiple LED's for easy indication of flow, error and I/O state
- SENSORPROM technology automatically configures the transmitter during start-up providing:
  - Factory pre-programming with calibration data, pipe size, sensor type and I/O settings
  - Any values or settings changed by the user is stored automatically
  - Automatically re-programming of a new transmitter, without loss of settings and accuracy
  - Transmitter replacement in less than 30 seconds
- Four-wire Pt1000 measurement ensuring optimum accuracy mass flow, density and fraction flow
- Fraction flow computation based on 3rd-order algorithm matching all applications

Application

SIFLOW FC070 mass flowmeters are suitable for all applications within the entire process industry, where there is a demand for accurate flow measurement. The meters are suitable for measuring on liquid and gas.

The main applications for the SIFLOW FC070 transmitter can be found in the following industries:

- Food and beverage
- Pharmaceutical
- Automotive
- Oil and gas
- Power generation and utility
- Water and waste water

Design

SIFLOW FC070 is designed in an IP20 SIMATIC S7-300 enclosure and for use in central and de-central cabinets where sensors: FCS200, FC300 and MASS 2100 are remotely mounted.

Function

The following key functionalities are available:

- Mass flow rate, volume flow rate, density, temperature and fraction flow
- Two built-in totalizers which can freely be set for counting mass, volume or fraction
- 1 frequency/pulse output
- 1 phase shifted 90°/180° frequency/pulse output
- Two-stage batch controller
- 1 digital input
- Low flow cut-off
- Empty pipe detection
- Noise filter settings for different applications
- Simulation
- Automatic zero point adjustment with zero point evaluation feed back
- Configurable upper and lower alarm and warning limits for all process values
- Comprehensive status and error reporting

© Siemens 2021

Technical specifications

Measurement of	Mass flow, volume flow, density, sensor temperature, fraction A flow, fraction B flow, fraction A in %
Measurement functions	
• Totalizer 1	Totalization of mass flow, volume flow, fraction A, fraction B
• Totalizer 2	Totalization of mass flow, volume flow, fraction A, fraction B
• Single and 2-stage batch function	Batching function with the use of one or two outputs for dosing in high and low speed
• 4 programmable limits	4 programmable high/low limits for mass flow, volume flow, density, sensor temperature, fraction A flow, fraction B flow, fraction A in %. Limits will generate an alarm if reached
Digital input	
Functions	Start batch, stop batch, start/stop batch, hold/continue batch, reset totalizer 1, reset totalizer 2, reset totalizer 1 and 2, zero adjust, force frequency output, freeze frequency output
High signal	• Nominal voltage: 24 V DC • Lower limit: 15 V DC • Upper limit: 30 V DC • Current: 2 … 15 mA
Low signal	• Nominal voltage: 0 V DC • Lower limit: -3 V DC • Upper limit: 5 V DC • Current: -15 … +15 mA
Input	Approx. 10 kΩ
Switching	Max. 100 Hz
Digital output 1 and 2	
Functions	• Output 1: Pulse, frequency, redundancy pulse, redundancy frequency 2-stage batch, batch • Output 2: Redundancy pulse, redundancy frequency, 2-stage batch
Voltage supply	3 … 30 V DC (passive output)
Switching current	Max. 30 mA at 30 V DC
Voltage drop	≤ 3 V DC at max. current
Leakage current	≤ 0.4 mA at max. voltage 30 V DC
Load resistance	1 … 10 kΩ
Switching frequency	0 … 12 kHz 50 % duty cycle
Functions	Pulse, frequency, redundancy pulse, redundancy frequency 2-stage batch, batch
Communication	
Modbus RS 232C	• Max. baud rate: 115 200 baud • Max. line length: 15 m at 115 200 baud • Signal level: according to EIA-RS 232C
Modbus RS 485	• Max. baud rate: 115 200 baud • Max. line length: 1 200 m at 115 200 baud • Signal level: according to EIA-RS 485 • Bus termination: Integrated. Can be enabled by inserting wire jumpers.

Galvanic isolation	All inputs, outputs and communication interfaces are galvanically isolated. Isolation voltage: 500 V
Power	
Supply	24 V DC nominal
Tolerance	20.4 V DC … 28.8 V DC
Consumption	Max. 7.2 W
Fuse	T1 A/125 V, not replaceable by operator
Environment	
Ambient temperature	Storage: -40 °C … +70 °C (-40 °F … +158 °F)
Operation conditions	Horizontally mounted rail: • SIFLOW FC070 Standard: 0 … +60 °C (32 … +140 °F) • SIFLOW FC070 Ex CT: -40 … +60 °C (-40 … +140 °F) Vertically mounted rail: • SIFLOW FC070 Standard: 0 … 45 °C (32 … 113 °F) • SIFLOW FC070 Ex CT: -40 … +45 °C (-40 … +113 °F)
Altitude	Operation: -1 000 … 2 000 m (pressure 795 … 1 080 hPa)
Enclosure	
Material	Noryl, color: anthracite
Rating	IP20/NEMA 2 according to IEC 60529
Mechanical load	According to SIMATIC standards (S7-300 devices)
Ex approvals	
• SIFLOW FC070 Standard	ATEX: II 3G Ex nA II T4
• SIFLOW FC070 Ex CT	ATEX, IECEx, EAC Ex, FM, CSA, INMETRO - Zone 2: Ex nA [ia] IIC T4 FM - Class I, Div. 2: Grp. A, B, C, D (interface to Class I+II+III, Div. 1)
Custody transfer approvals	
SIFLOW FC070 Ex CT	Compressed gaseous fuel measuring systems for vehicles NTEP for USA and Canada, approval no: 97-111A3
EMC performance	
Emission	EN 55011/CISPR-11
Immunity	EN/IEC 61326-1
Certification	
CE mark	Low voltage directive RoHS
NAMUR	Within the limits according to "General recommendations" with error criteria A in accordance with NE 21
Programming tools	
SIMATIC S7	Configuration through backplane P-BUS, PLC program and WinCC flexible
SIMATIC PCS7	Configuration trough backplane P-BUS and PLC/WinCC faceplates, certified driver
SIMATIC PDM	Through Modbus port RS 232C and RS 485, certified driver

© Siemens 2021

3

Selection and ordering data

Description	Article No.
SIFLOW FC070 flow transmitter Remember to order 40 pin front plug connector.	**7ME4120-2DH20-0EA0**
40 pin front plug with screw contacts	**6ES7392-1AM00-0AA0**
40 pin plug with spring contacts	**6ES7392-1BM01-0AA0**
SIFLOW FC070 Ex flow transmitter Remember to order 20 pin front plug connector.	**7ME4120-2DH21-0EA0**
20 pin front plug with screw contacts	**6ES7392-1AJ00-0AA0**
20 pin plug with spring contacts	**6ES7392-1BJ00-0AA0**

Operating instructions for SITRANS FC SIFLOW FC070

Description	Article No.
SIFLOW FC070 system manual	
• English	**A5E00924779**
• German	**A5E00924776**
SIFLOW FC070 with S7	
• English	**A5E02254228**
• German	**A5E02665536**
SIFLOW FC070 with PCS 7	
• English	**A5E03694109**

All literature is available to download for free, in a range of languages, at

www.siemens.com/processinstrumentation/documentation

Accessories

Description	Article No.	
Cable with multiplug for connecting MASS 2100, FCS200 and FC300 sensors, 5 × 2 × 0.34 mm^2 twisted and screened in pairs. Temperature range -20 °C ... +110 °C (-4 °F ... +230 °F)		
• 5 m (16.4 ft)	**FDK:083H3015**	
• 10 m (32.8 ft)	**FDK:083H3016**	
• 25 m (82 ft)	**FDK:083H3017**	
• 50 m (164 ft)	**FDK:083H3018**	
• 75 m (246 ft)	**FDK:083H3054**	
• 150 m (492 ft)	**FDK:083H3055**	
Cable without multiplug for connecting MC2 sensors, 5 × 2 × 0.34 mm^2 twisted and screened in pairs. Temperature range - 20 °C ... +110 °C (-4 °F ... +230 °F)		
• 10 m (32.8 ft)	**FDK:083H3001**	
• 25 m (82 ft)	**FDK:083H3002**	
• 75 m (246 ft)	**FDK:083H3003**	
• 150 m (492 ft)	**FDK:083H3004**	
SIMATIC S7-300 rail The mechanical mounting rack of the SIMATIC S7-300		
• 160 mm (6.3")	**6ES7390-1AB60-0AA0**	
• 482 mm (18.9")	**6ES7390-1AE80-0AA0**	
• 530 mm (20.8")	**6ES7390-1AF30-0AA0**	
• 830 mm (32.7")	**6ES7390-1AJ30-0AA0**	
• 2 000 mm (78.7")	**6ES7390-1BC00-0AA0**	
SIMATIC S7-300, stabilized power supply PS307 • Input: 120/230 V AC • Output: 24 V DC/2 A	**6ES7307-1BA01-0AA0**	

© Siemens 2021

Dimensional drawings

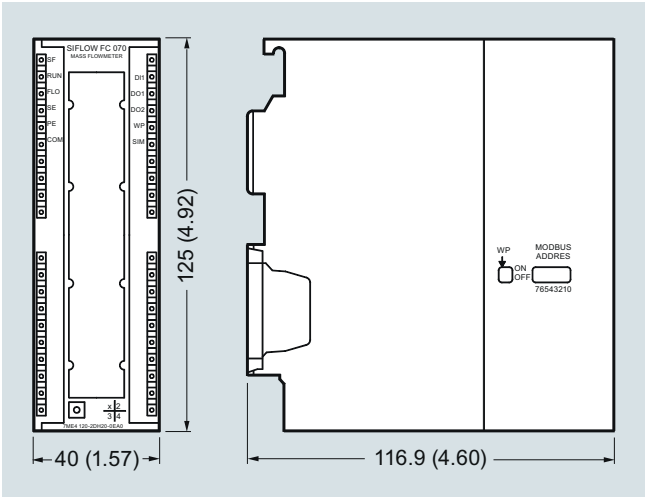

SIFLOW FC070, dimensions in mm (inch)

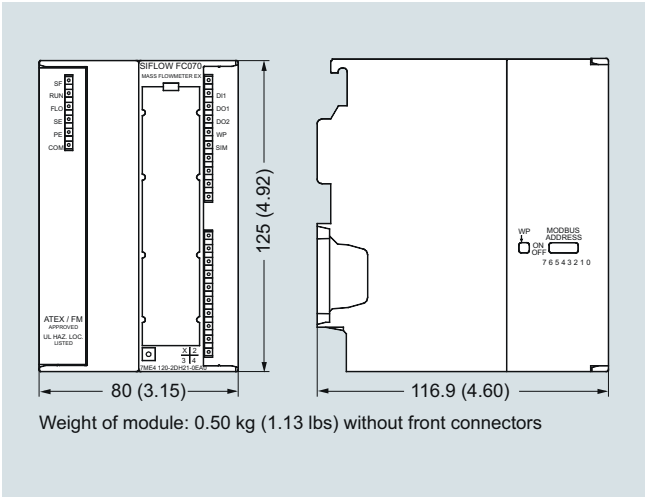

Weight of module: 0.50 kg (1.13 lbs) without front connectors

SIFLOW FC070 Ex CT, dimensions in mm (inch)

Circuit diagrams

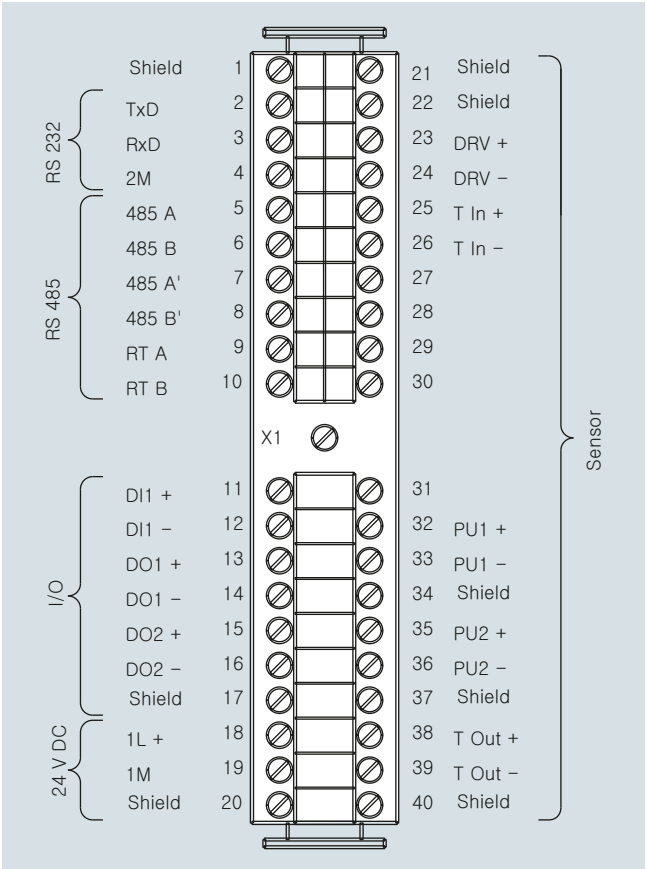

SIFLOW FC070, electrical connection

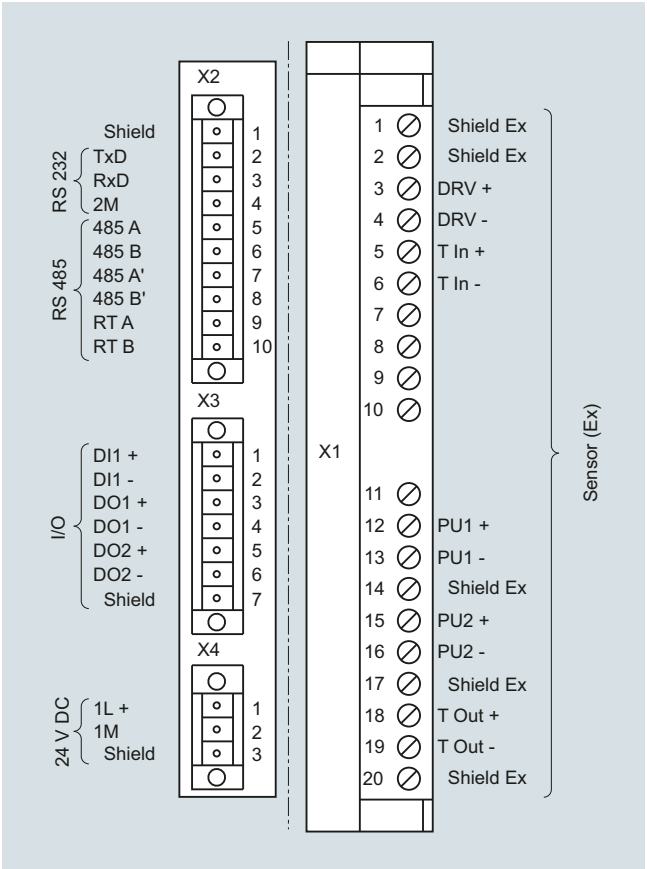

SIFLOW FC070 Ex CT, electrical connection

© Siemens 2021

Introduction

Overview

Siemens offers two types of ultrasonic flowmeters, inline flowmeters and clamp-on flowmeters. This offers the end user the maximum flexibility to choose the technology that best fits his needs. This following chapter shows the inline versions.



SITRANS FS inline ultrasonic flowmeters measure flow of electrically conductive and non-conductive liquids.

Benefits

- Greater flexibility:
  - Sensor sizes from DN 50 to 1200 mm (2" to 48")
  - Inline retrofit as 1-path and 2-path up to DN 1200 mm (2" to 48")
  - Compact and remote transmitter installation
  - HART and PROFIBUS PA communication
  - Mains or battery powered solutions
  - Dedicated transmitter portfolio for HVAC, power generation, utility and general industry as well as more demanding applications
- Easier service:
  - Exchange of the transducers without interrupting operation
  - Battery lifetime of up to 6 years
- Approvals/certificates:
  - Custody transfer approvals within district heating
  - ATEX
  - Standard with calibration certificate

Application

Inline ultrasonic flowmeters are suitable for measuring the flow of liquids with good acoustic permeability, independent of conductivity, viscosity, temperature, density and pressure.

- max. 3 % solids
- max. 3 % air and gas
- max. 350 cSt

The main applications can be found in the following sectors:

- Raw water intake for water treatment plants
- Treated waste water
- Power generation and utility
- Irrigation systems
- Cooling water plants within the industry and in power stations
- Plants transporting non-conductive liquids
- Custody transfer - district heating (MID-004)
- HART/4 to 20 mA output
- PROFIBUS PA
- ATEX

© Siemens 2021

Application

Please see Product selector on the Internet, since some constrains might be related to some of the features: www.pia-portal.automation.siemens.com

PIA Life Cycle Portal
The tool for Engineering, Ordering, Installation and Operation






		SONO 3300/ FUS060	SONO 3100/ FUS060	SONOKIT/ FUS060, FUS080	FUE380	FUS380
		7ME3300...	7ME3100...	7ME3210.../ 7ME3220...	7ME3410...	7ME3400...
Industry						
Water, treated waste water		**XXX**	**XX**	**XXX**		**XXX**
Irrigation		**XX**	**XX**	**XXX**		**XXX**
Utility, district heating water, cooling		**XXX**	**XX**	**XXX**	**XXX**	**XXX**
Utility, district heating, CT approvals required					**XXX**	
Cryogenic fluids (only on request)			**XXX**			
Onshore and Offshore applications		**XX**	**XXX**	**XX**		**X**
Design						
Compact transmitter mounted on pipe					•	•
Remote transmitter- Sensor up to 100 m		•	•	•	•	•
Transducers can be replaced under pressure			•	•		
Retrofit on existing steel pipes/non weldable				•		
Transmitter enclosure						
Polyamid, IP67				•	•	•
Die-cast aluminum (painted), IP65		•	•	•		
Communication						
HART		•	•	•		
PROFIBUS PA		•	•	•		
Power supply						
3.6 V Battery				•	•	•
115 … 230 V AC		•	•	•	•	•
115 … 230 V AC and 3.6 V battery backup				•	•	•
24 V AC/DC		•	•	•		
Accuracy						
0.25 % (4 path system on request)			•			
0.50 %		•	•	•	•	•
Sensor design						
1- path ultrasonic measurement			•	•		
2-path ultrasonic measurement		•	•	•	•	•
4-path ultrasonic measurement (special request)			•	•		
Dimension						
DN 50	2"	•			Die- cast bronze	Die- cast bronze
DN 65	2½"	•			Die- cast bronze	Die- cast bronze
DN 80	3"	•			Die- cast bronze	Die- cast bronze
DN 100	4"	•	•	1-path only	•	•
DN 125	5"	•	•	1-path only	•	•
DN 150	6"	•	•	1-path only	•	•
DN 200	8"	•	•	•	•	•
DN 250	10"	•	•	•	•	•
DN 300	12"	•	•	•	•	•
DN 350	14"		•	•	•	•
DN 400	16"		•	•	•	•
DN 500	20"		•	•	•	•
DN 600	24"			•	•	•
DN 700	28"			•	•	•
DN 800	32"			•	•	•
DN 900	36"			•	•	•
DN 1000	40"			•	•	•
DN 1200	48"			•	•	•

X = can be used, **XX** = often used, **XXX** = most often used, • = available

© Siemens 2021

System information

Application (continued)

Please see Product selector on the Internet, since some constrains might be related to some of the features: www.pia-portal.automation.siemens.com











		SONO 3300/ FUS060	SONO 3100/ FUS060	SONOKIT/ FUS060, FUS080	FUE380	FUS380
		7ME3300...	7ME3100...	7ME3210.../ 7ME3220...	7ME3410...	7ME3400…
Process connection						
Flanges		•	•		•	•
Flangeless (for weld-in)			•			
Flanges norm						
EN 1092-1		•	•		•	•
EN 1759-1		•	•			
ANSI B16.5			•			
Pressure rating						
PN 6				•		
PN 10		•	•	•		
PN 16		•	•	•	•	•
PN 25			•	•	•	•
PN 40		•	•	•	•	•
Class 150		•	•			
Class 300		•	•			
Pipe, flange						
Carbon steel		•	•	•	•	•
Die cast bronze (DN 50, 65, 80)					•	•
Media temperature						
°C	°F					
-20	-4		•	•		
-10	+14	•	•	•		
+2	+35.6	•	•	•	Min. 5 °C (41 °F)	•
+60	+140	•	•	•	•	•
+120	+248	•	•	•	Compact	Compact
+150	+302	•	•	•	Die cast bronze	Die cast bronze
+160	+320	•	•	•	•	•
+190	+374		•	•	•	•
+200	+392		•	•	•	•
Measuring principle						
Transit time principle		•	•	•	•	•
Approvals						
Custody transfer approval						
MID, MI-004, EN 1434 (European energy meter standard)					•	
Other country-specific type approval available for:						
• Russia		•	•	•	•	•
• China (CPA/CMC)					•	
• Korea KC		•	•	•	•	•
Ex approval						
Ex d ATEX			•	•		
Ex i ATEX		•	•	•		

• = available

© Siemens 2021

Function

Physical principle (single path)

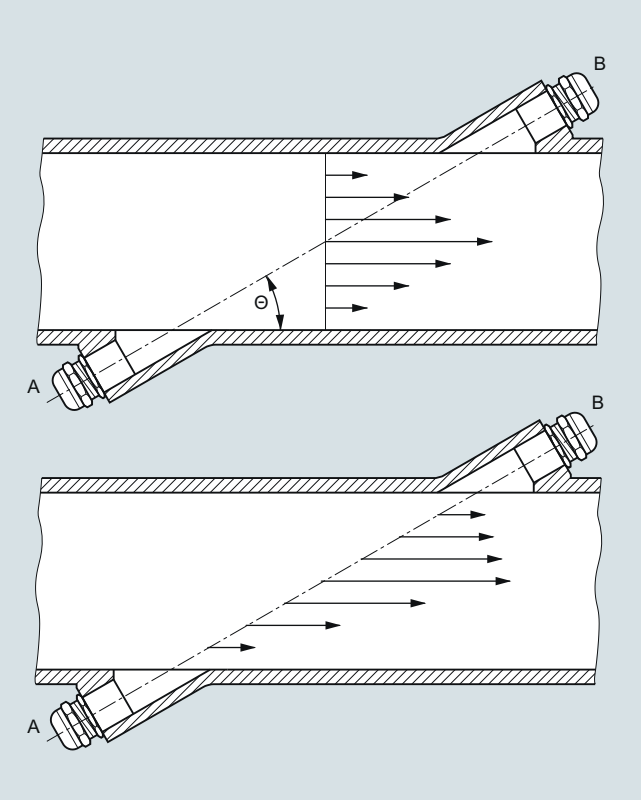

Velocity distribution along sound path

A sound wave traveling in the same direction as the liquid flow arrives at point B from point A in a shorter time than the sound wave traveling against the direction of flow (from point B to A). The difference in sound transit time indicates the flow velocity in the pipe.

Since delay time is measured at short intervals both in and against flow direction, viscosity and temperature have no influence on measurement accuracy.

Measuring principle

In SITRANS F US flowmeters the two ultrasonic transducers are placed at an angle θ in relation to the pipe axis. The transducers function as transmitters and receivers of the ultrasonic signals. Measurement is performed by determining the time the ultrasonic signal takes to travel with and against the flow. The principle can be expressed as follows:

$v = K \cdot (t_{B,A} - t_{A,B}) / (t_{A,B} \cdot t_{B,A}) = K \cdot \Delta t/t^2$

v = Average flow velocity
t = Transit time
K = Proportional pipe geometry factor

This measuring principle offers the advantage that it is independent of variations in the actual sound velocity of the liquid, i.e. independent of the temperature.
Proportional factor K is determined by wet calibration.

Direct signal processing

The ultrasonic signal is sent directly between the transducers. The advantage gained sending signals from point to point is an extremely good signal strength.

2-path solution

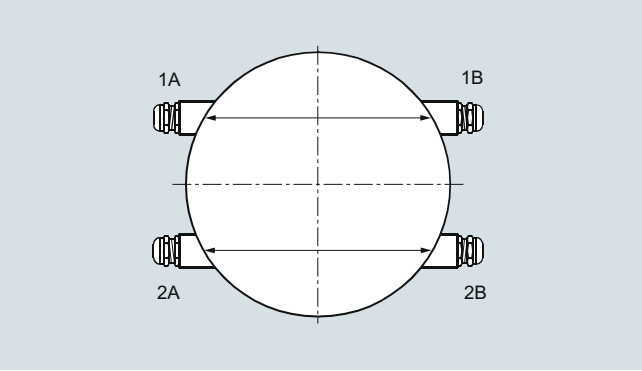

Ultrasonic 2-path flow meter with 4 transducers. In the upper path transducers 1A/1B and in the lower path 2A / 2B are displayed.

The accuracy of ultrasonic flowmeters depends on the pipe geometry before and after the flowmeter and the number of ultrasonic measuring paths.

When water flows through a pipe, it has a tendency to swirl and/or flow with different velocities inside the pipe, depending on the pipe design.

A 2-path ultrasonic flowmeter offers:

- less sensitivity to upstream obstruction like bends, pumps or valves.
- high security in the measurements as the meter continues to measure even if, for some reason, one path stops working.

Typical straight inlet requirements are upstream 10 x D_i (D_i = diameter of the flowmeter) and downstream 3 x D_i.

Typical accuracy that can be reached with 2-path ultrasonic flowmetering is ± 0.5 % with installations according to above demands.

© Siemens 2021

3

Technical specifications

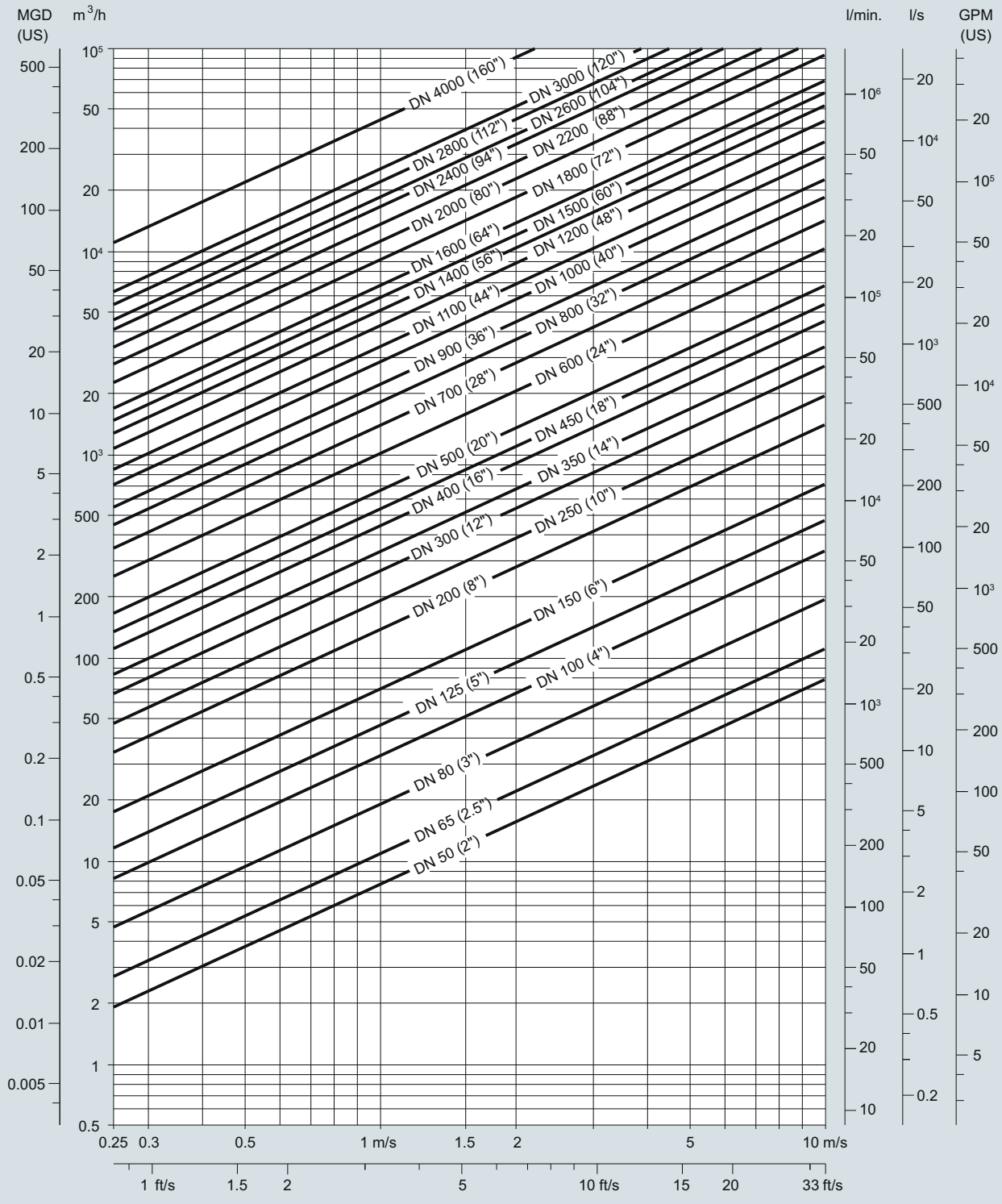

Nominal size and flow

© Siemens 2021

Technical specifications (continued)

Guidelines for selection of sensor

- Min. measuring range: 0 … 1 m/s
- Max. measuring range: 0 … 10 m/s

Nominal flow velocity:

- Normal: 1 … 3 m/s
- Minimum: not permanently below 0.5 m/s
- Maximum: up to 8 m/s

Flow velocity calculation formula:

- $v = (4 \times Q_{max}) / (\pi \times D_i^2 \times 3600)$
- v in m/s, Q_{max} in m^3/h, D_i in m

Additional to the flow velocity check it is recommended to observe the Reynolds number (Re):

The optimal performance of the flowmeter is with a Re above 10 000, which is typical for flow velocities (water) above 0.5 m/s. Avoid an Re value between 2000 and 5000. In order to observe this and to be above the recommended 0.5 m/s flow velocity limit the sensor size must be reduced.

Re formula: Re = V x Di / Viscosity

V in m/s, Di in m, Viscosity in cSt (X x E^{-6} m^2/s)

Example: Viscosity for water at 20 °C = 1 x E^{-6} m^2/s

Inlet and outlet conditions

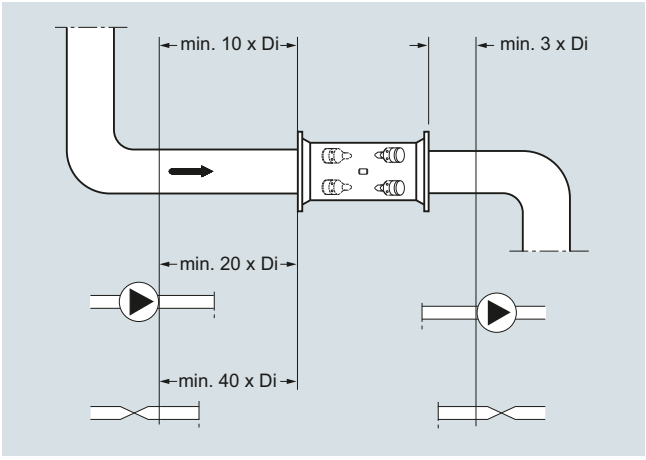

Recommended inlets and outlets

To maximize performance inlet and outlet must be straight. There must be a certain distance between flowmeter and bends, pumps and valves. It is also important to centre the flowmeter in relation to pipe flanges and gaskets.

Valves must always be installed after the flowmeter. The only exception is installation of the sensor in a vertical pipe. In this case a valve below the sensor is necessary to allow zero point adjustment. It is important to select a valve which does not alter the flow when fully open.

Recommended inlet/outlet

	SONO 3300, SONO 3100, SONOKIT 2-path	FUS380/ FUE380[1)]	SONOKIT 1-path
90° bend	10 x D_i	10 x D_i	20 x D_i
Fully opened valve	10 x D_i	10 x D_i	20 x D_i
Partially opened valve	40 x D_i	40 x D_i	40 x D_i
2 x 90° bends in same plane	15 x D_i	15 x D_i	25 x D_i
2 x 90° bends in two planes	20 x D_i	20 x D_i	40 x D_i
Reductions (Outlet 0 x D_i)	10 x D_i	10 x D_i	20 x D_i
Pumps	20 x D_i	20 x D_i	40 x D_i
Outlet	3 x D_i	3 x D_i	3 x D_i

[1)] Inlet for FUE380 approved systems: Minimum straight inlet pipe: 1.5 m, but note further recommendations above.

Reductions

The flowmeter can be installed between two reducers (e.g. DIN 28545). At 8° the pressure drop curve below applies.

Example:

A flow velocity of 3 m/s (V) in a sensor with a diameter reduction from DN 250 to DN 200 (d_1/d_2 = 0.8) gives a pressure drop of 3 mbar.

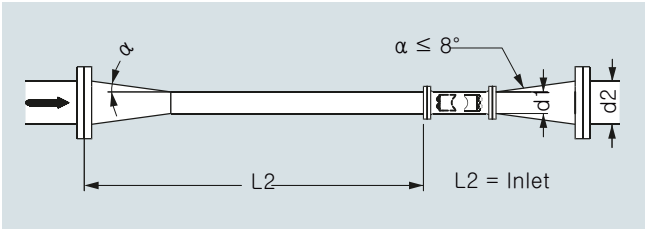

© Siemens 2021

3

Technical specifications (continued)

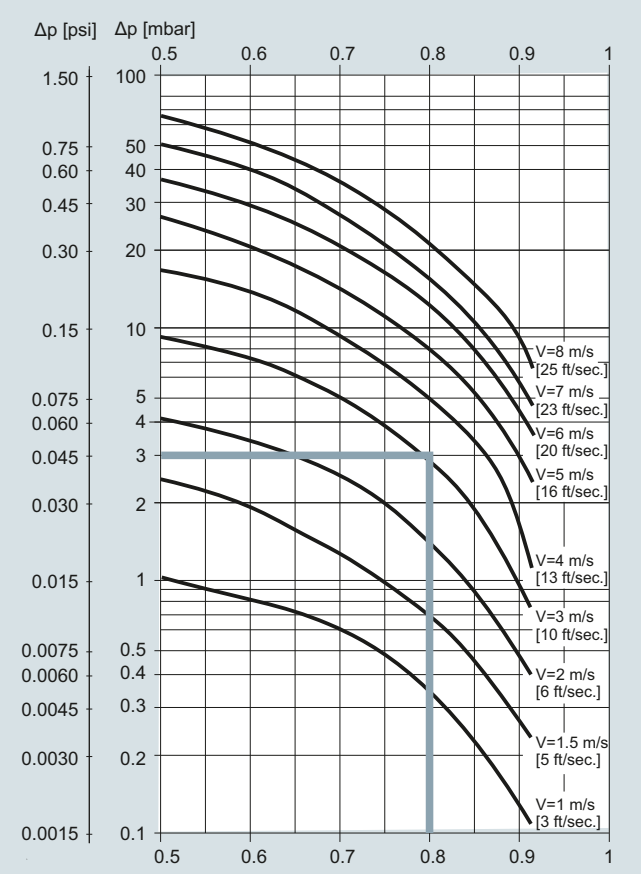

The sensor must always be completely filled with liquid:

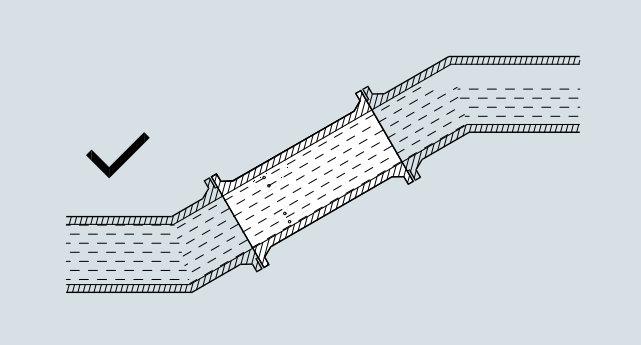

The following installations must be avoided:

- Installation at the highest point of the pipe system
- Installation in vertical pipes with free outlet

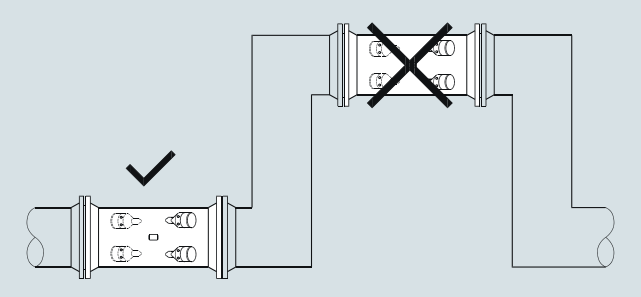

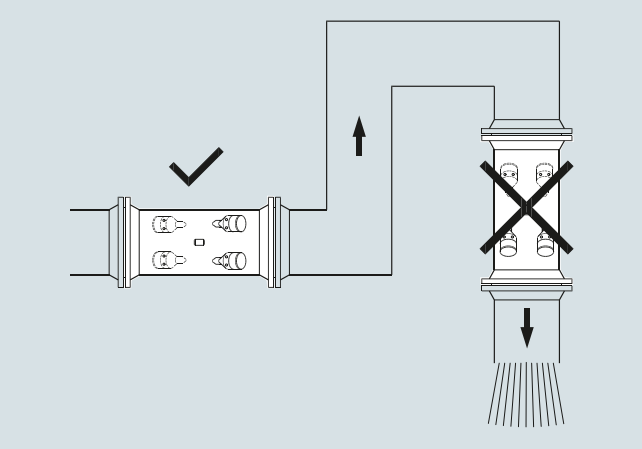

With partially full pipes or pipes with free outlet the flowmeter should be located in a U-shaped tube:

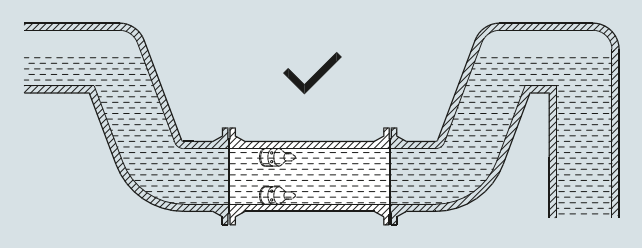

Installing the transducers in horizontal position is recommended:

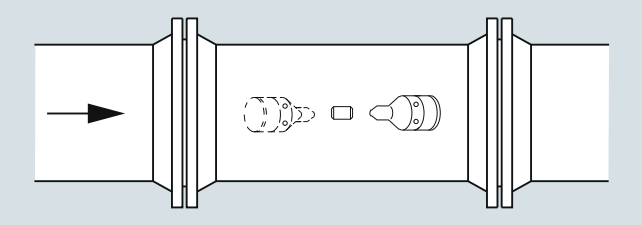

© Siemens 2021

Technical specifications (continued)

Pressure/temperature curve to EN (DIN) flanges

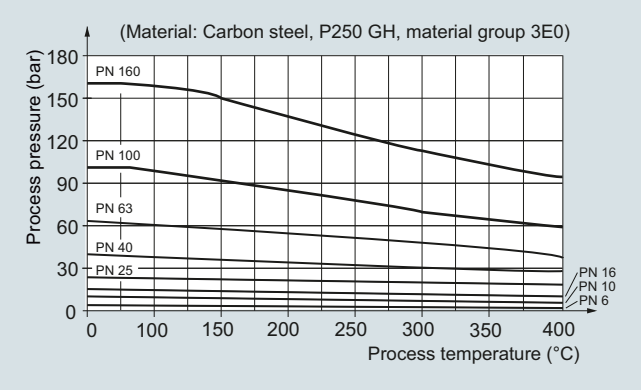

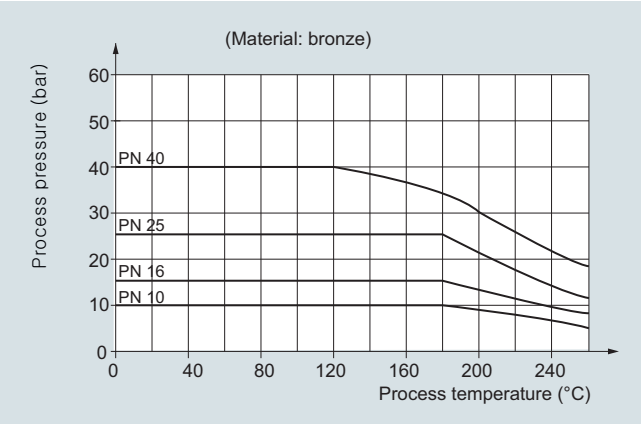

Pressure/temperature curve to ANSI B16.5 flanges

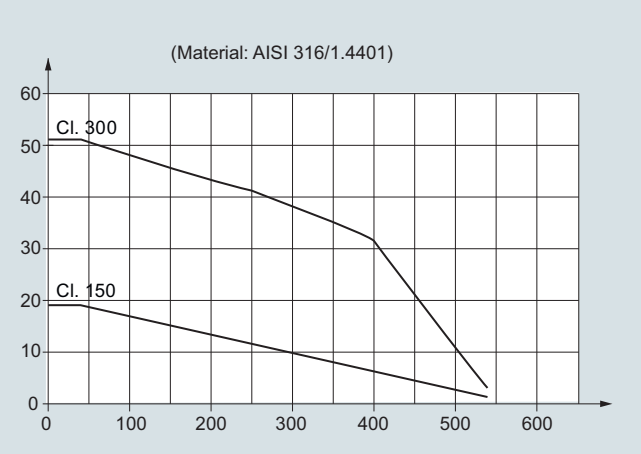

Note: The pressure/temperature curves only assist in the selection of a system. No responsibility is taken for the correctness of the information. For exact data please refer to the PED requirements.

Reference conditions

To ensure continuous accurate measurement, flowmeters must be calibrated. The calibration is conducted at Siemens flow facilities with traceable instruments referring directly to the physical unit of measurement according to the International System of Units (SI).

Therefore the calibration certificate ensures recognition of the test results worldwide, including the US (NIST traceability).

Siemens offer accredited calibrations assured to ISO 17025. Siemens Flow Instruments accredited laboratories are recognized by ILAC MRA (International Laboratory Accreditation Corporation - Mutual Recognition Arrangement) ensuring international traceability and recognition of the test results worldwide.

Flowmeter calibration data are stored in the internal EEPROM of the transmitter FUS060 or FUS080.

The system accuracy refers to the following systems:

SONO 3300/FUS060, SONO 3100/FUS060[1] which are typically calibrated on the frequency output.

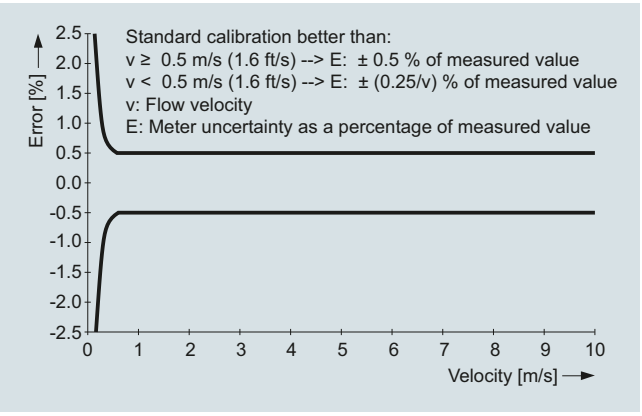

Typical calibration reference conditions:	
Fluid	Water
Fluid temperature	22 ± 5 °C
Ambient temperature	22 ± 5 °C
Supply voltage	115/230 V AC +10 … -15 % DC 24 V +25 … -15 %, AC 24 V ± 15 %
Straight inlet length	20 x D_i
Outlet	3 x D_i
Rangeability	0 … 1 m/s to 0 … 10 m/s
Repeatability	Better than 0.25 % in the range 0.5 … 10 m/s
Linearity (for water)	
• Reynolds number 1000 < Re < 5000	Better than 1 %
• Reynolds number > 5000	Better than 0.5 %

[1] Only systems with transmitter FUS060. For systems with transmitter FUS080 see the sections FUS380 and FUE380.

Additional effects of deviations from reference conditions

- Current output: As frequency output (± 0.1 % of actual flow +0.05 % FSO)
- Effect of ambient temperature: Frequency/pulse output: < 0.005 % SPAN/K; Current output: < ± 0.0075 % SPAN/K
- Effect of supply voltage: 0.005 % of measuring value at 1 % change

© Siemens 2021

SITRANS FUS060 transmitter

Overview



SITRANS FUS060 is a transit time based transmitter designed for ultrasonic flowmetering with dedicated sensors in the FUS inline series up to DN 500. SITRANS FUS060 is engineered for high performance and is suitable for 1- and 2-path flowmeters.

Benefits

- Superior signal resolution for optimum turn down ratio
- Simple menu-based local operation with two-line display and four optical input elements, for unlimited use in potentially explosive atmospheres
- Self-monitoring and diagnostic
- Operate up to 2 paths
- ATEX II G Ex dem [ia/ib] IIC T6/T4/T3 Gb
- Remote installation up to 120 m from sensor
- 1 analog output (4 to 20 mA) standard with HART-protocol, 1 digital frequency or pulse output, 1 relay output for limit, alarms, flow direction
- PROFIBUS PA Profile 2, 1 digital frequency or pulse output

Application

The main application for flowmeters with the transmitter SITRANS FUS060 is measurement volume of water and waste water.

Design

The transmitter type FUS060 is designed for remote installation in non-hazardous or hazardous areas.

The transmitter is designed for use in a flowmeter system together with sensors type SONOKIT, SONO 3300 and SONO 3100.

The FUS060 is ordered as part of a complete flowmeter system. It can be ordered separately as spare part and manually programmed with the sensor data.

Function

Displays and keypad

Operation of the SITRANS FUS060 transmitter can be carried out using:

- Keypad and display unit
- HART communicator
- PC/laptop and SIMATIC PDM software via HART communication
- PC/laptop and SIMATIC PDM software using PROFIBUS PA communication

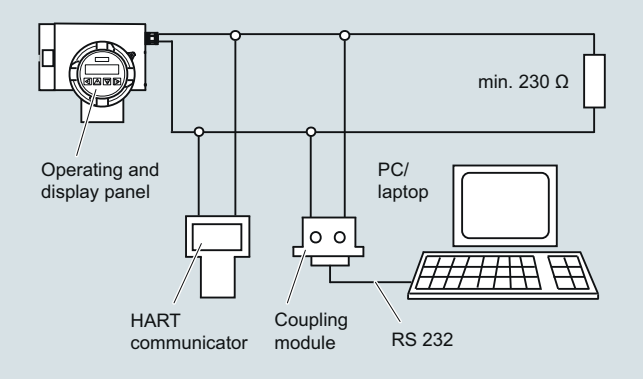

HART communication

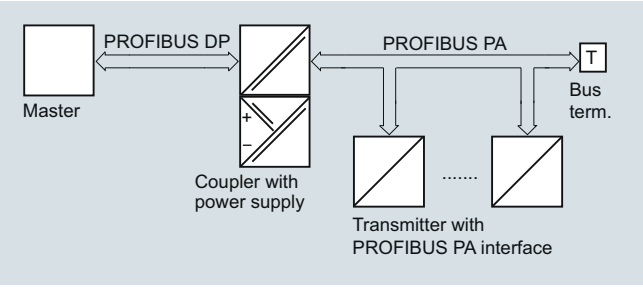

PROFIBUS PA communication

The operating and display panel permits simple operation without supplementary equipment. It is not necessary to open the housing. All changes to a setting can therefore also be carried out in the potentially explosive atmosphere.

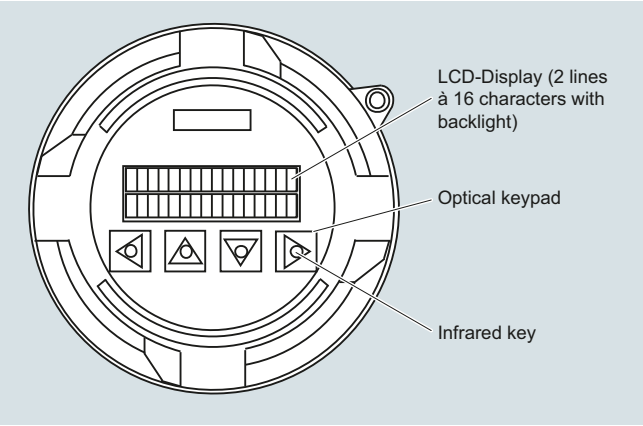

Operating and display panel

© Siemens 2021

Function (continued)

The individual functions and parameters are selected using a hierarchical, multi-language input menu and four infrared keys. The parameters can be specifically selected and modified using codes, e.g.:

- Operating parameters such as measuring range, physical dimensions, device information
- Limits for flow, totalizer, ultrasonic velocity or ultrasonic amplitude
- Noise suppression using damping, error stages and hysteresis
- Display parameters (freely-configurable display)
- Display in volume or mass dimensions
- Density as constant input value for conversion of volume into mass dimensions
- Forward/backward measurement
- Flow direction
- Diagnostics functions and control values
- Functions of the PROFIBUS PA output:
  flow, net quantity (volume or mass), ultrasonic velocity, ultrasonic amplitude, forward quantity (volume or mass), backward quantity (volume or mass)
- Functions of the analog output:
  flow, ultrasonic velocity or ultrasonic amplitude
- Functions of digital output 1:
  pulse output, frequency output, limit, flow direction or device status
- Functions of digital output 2:
  limit, flow direction or device status
- Simulation of output signal via analog output, digital output 1 and digital output 2

The HART protocol is implemented via the analog output (current output). Using this communication facility, the device can be parameterized with a PC/laptop and SIMATIC PDM software in addition to local operation.

In the version with PROFIBUS PA, the analog output is replaced by the digital PROFIBUS PA output. The device can then be parameterized via PROFIBUS communication and with SIMATIC PDM in addition to local operation.

Integration

The transmitter output is often used as input for an automation system or as input for systems of remote reading.

The SITRANS FUS060 transmitter offers current, pulse and relay outputs as standard output functions and supports HART or Profibus PA communication.

The settings of the transmitter output functions are individually programmed via keypad and display menu.

© Siemens 2021

3

Technical specifications

Input	
Measurement	Flow by measuring the transit time difference of ultrasonic signals through ultrasonic transducers in DN 100 ... 500 (4 ... 20") 2-path sensor pipes: 1-path or 2-path
Nominal sizes and number of paths	2-path DN 100 ... 500 (4 ... 20")
Max. cable length	20 m (395 ft) (shielded coaxial cable). For Ex version the transducer cable length is restricted to 3 m (9.84 ft) in order to meet requirements for electrical immunity.
Analog output	
Function	Current output programmable for flow, sound velocity or amplitude level. Active current output (13.2 V < open loop voltage < 15.8 V)
• Signal range	4 … 20 mA
• Upper limit	20 … 22.5 mA, adjustable
• Signal on alarm	3.6 mA, 22 mA, or 24 mA
• Load	Max. 600 Ω; for non Ex version ≤ 230 Ω for HART communication ≤ 330 Ω for Ex-version
• Only PROFIBUS PA version:	Analog output omitted, is replaced by digital PROFIBUS PA interface
Digital output 1	
Function	Pulse, frequency or status output - programmable for pulses, frequency, alarm, limit or status.
• Active or passive signal, can be configured with positive or negative logic	Active: 24 V DC, ≤ 24 mA, R_i = 300 Ω Passive: open collector, 30 V DC, ≤ 200 mA
• For explosion protection (ATEX version) and PROFIBUS PA version	Only passive: open collector 30 V DC, ≤ 100 mA
• Output function, configurable	Pulse output • Adjustable pulse significance ≤ 5 000 pulses/s • Adjustable pulse width ≥ 0.1 ms Frequency response • f_{END} selectable up to 10 kHz Limit for flow, totalizers, ultrasonic velocity or ultrasonic amplitude device status, flow direction

Digital output 2	
Function	Relay output - programmable for alarm, limit or status indication.
• Relay, NC or NO contact	Switching capacity max. 5 W Max. 50 V DC, max. 200 mA DC Self-resetting fuse, R_i = 9 Ω
• For explosion protection (ATEX version)	Max. 30 V DC, max. 100 mA DC, 50 mA AC (cf. EC-Type Examination certificate)
• Output function, configurable	Limit for flow, ultrasonic velocity or ultrasonic amplitude flow direction device status
• Only PROFIBUS PA version:	Digital output 2 omitted
Communication via analog output 4 … 20 mA	
• PC/laptop or HART communicator with SITRANS F flowmeter	
- Load with connection of coupling module	min. 230 Ω (max. 330 Ω for Ex-version)
- Load with connection of HART communicator	min. 230 Ω
- Cable	2-wire shielded ≤ 3 km (≤ 1.86 miles) Multi-core shielded ≤ 1.5 km (≤ 0.93 miles)
- Protocol	HART, version 5.1
Communication via PROFIBUS PA interface	Layers 1 + 2 according to PROFIBUS PA Communication system according to IEC 61158/EN 50170
• Power supply	Separate supply, four-wire device Permissible bus voltage 9 … 32 V See certificates and approvals
• Current consumption from bus	10 mA; ≤ 15 mA in event of error with electronic current limiting
Electrical isolation	Outputs electrically isolated from power supply and from another
Accuracy	
Error in measurement (at reference conditions)	
• Pulse output	≤ ± 0,5 % of measured value at 0,5 … 10 m/s or ≤ ± 0,25/V[m/s]% of measured value at flow < 0,5 m/s
• Analog output 4 ... 20 mA	As pulse output plus ± 0.1 % of measured value, ± 20 µA
• Repeatability	≤ ± 0,25 % of measured value at 0.5 … 10 m/s
Reference conditions (water)	
• Process temperature in the connected sensor	25 °C ± 5 °C (77 °F ± 9 °F)
• Ambient temperature at the transmitter	25 °C ± 5 °C (77 °F ± 9 °F)
• Transmitter warming-up time	30 min.

© Siemens 2021

Technical specifications (continued)

Rated operation conditions	
Ambient conditions	
Ambient temperature	
• Operation	-20 … +50 °C (-4 … +122 °F)
• In potentially explosive atmospheres	Observe temperature classes
• Storage	-25 … +80 °C (-13 … +176 °F)
Enclosure rating	IP65 (NEMA 4)
Electromagnetic compatibility	For use in industrial environments
• Emitted interference	To EN 55011 / CISPR-11
• Noise immunity	To EN/IEC 61326-1 (Industry)
Medium conditions	The measuring media must be ultrasonic signal compatible. It must be homogeneous and not two-phased to transfer the acoustic ultrasonic signals.
• Process temperature	-200 … +250 °C (-328 … +482 °F) (not directly influenced by medium temperature)
• Gases/solids	Influence accuracy of measurement (approx. max. 3 % gases or solids)
Design	
Separate version	Transmitter is connected to the transducers via 3 … 120 m (9.8 ft … 395 ft) long specially shielded cables (coaxial cable) For ATEX versions mounted in the Ex area only with 3 m (9.8 ft) long cables.
Enclosure material	Die-cast aluminium, painted
Wall mounting bracket (standard and special)	Stainless steel (standard: always incl.)
Weigth of transmitter	4.4 kg (9.7 lb)
Electrical connection	Cable glands (always incl.) • Power supply and outputs - 2 x M20 (HART)/M25 (PROFIBUS) or 2 x ½"-NPT (HART) • Transducers/sensor - 2/4 x M16 or 2/4 x ½"-NPT
Display and controls	
Display	LCD, two lines with 16 characters each
• Multi-display: 2 freely-selectable values are displayed simultaneously in two lines	Flow, volume, mass flow, mass, flow velocity, speed of sound, ultrasonic signal information, current, frequency, alarm information
Operation	4 infrared keys, hierarchical menu shown with codes
Power supply	
Supply voltage	
• Standard version	120 … 230 V AC ± 15 % (50/60 Hz) or 19 … 30 V DC/21 ... 26 V AC
• Ex version	19 … 30 V DC/21 … 26 V AC
Power failure	No effect for at least 1 period (> 20 ms)
Power consumption	Approx. 10 VA/10 W
Certificates and approvals	
Explosion protection	ATEX II 2 G Ex dem [ia/ib] IIC T6/T4/T3 Gb T6 for media < 85 °C (185 °F) T5 for media < 100 °C (212 °F) T4 for media < 135 °C (275 °F) T3 for media < 200 °C (392 °F)

Coaxial cable		
Standard Coaxial cable (75 Ω)	Coaxial cable with SMB straight plug on one end for connection to the FUS060 Pre-terminated, can be shortened on sensor side	
Outside diameter	Ø 5.8 mm	
Length	3, 15, 30, 60, 90, 120 m (9.84, 49.21, 98.43, 196.85, 295.28, 393.70 ft) between sensor and transmitter	
Material (outside jacket)	black PE	
Ambient temperature	-10 … +70 °C (14 … 158 °F)	
High temperature Coaxial cable (75 Ω)	Coaxial cable with SMB straight plug on one end for connection to the FUS060	
Outside diameter	Ø 5.13 mm (first 0.3 m (0.98 ft) part to the transducer), Ø 5,8 mm (for remaining cable to the transmitter – with SMB plug at the end) and between these is a black hot melt junction Ø 16 mm (length 70 mm) Fix terminated, can NOT be shortened	
Length	3, 15, 30 m (9.84, 49.21, 98.43 t) between sensor and transmitter (max. 3 m (9.84 ft)) transducer cable length for Ex area mounted transmitters)	
Material (outside jacket)	Brown PTFE (0.3 m (0.98 ft) part) and black PE (for remaining cable)	
Ambient temperature	-200 … +200 °C (-328 … +392 °F) (brown PTFE transducer part) and -10 … +70 °C (14 … 158 °F) (black PE for remaining transmitter cable part)	

3

© Siemens 2021

Selection and ordering data

Transmitter FUS060 operating instructions, accessories and spare parts

Operating instructions

Description	Article No.
• English	**A5E01204521**
• German	**A5E02123845**

All literature is available to download for free, in a range of languages, at
https://www.siemens.com/processinstrumentation/documentation

Accessories

Description	Article No.	
Standard wall mounting bracket	**7ME5933-0AC04**	
Special wall-/pipe mounting bracket kit	**7ME5933-0AC05**	
Safety clamp for electronic cover with glass plate (7ME5933-0AC01)	**7ME5933-0AC06**	
Process Device Manager SIMATIC PDM		
SIMATIC PDM For more details about SIMATIC PDM please go to chapter 8 "Digitalization and Communication".	**See the Selection and Ordering data on chapter 8 "Digitalization and Communication"**	
HART modem for communication with FUS060 HART, PC and SIMATIC PDM		
HART modem With USB connection	**7MF4997-1DB**	

Spare parts

SITRANS FUS060 transmitter, available standard and Ex versions

The transmitter configuration is made in the flowmeter order codes (together with the sensors).
The information below is for spare part ordering only and with fixed standardized pre-settings for a DN 2000 2-path system.

Description	Version	Enclosure	Supply	Article No.	
FUS060, 230 V, HART, Metric cable glands	Transmitter for remote connection	IP65 (NEMA 4)	115 … 230 V AC 50/60 Hz	**7ME3050-2BA10-1BA1**	
FUS060, 230 V, HART, Imperial cable glands	Transmitter for remote connection	IP65 (NEMA 4)	115 … 230 V AC 50/60 Hz	**7ME3050-2BA10-1BA2**	
FUS060, 230 V, PROFIBUS, Metric cable glands	Transmitter for remote connection	IP65 (NEMA 4)	115 … 230 V AC 50/60 Hz	**7ME3050-2BA10-1DA1**	
FUS060, 230 V, PROFIBUS, Imperial cable glands	Transmitter for remote connection	IP65 (NEMA 4)	115 … 230 V AC 50/60 Hz	**7ME3050-2BA10-1DA2**	
FUS060, 24 V, HART, Metric cable glands	Transmitter for remote connection	IP65 (NEMA 4)	19 … 30 V DC/ 21 … 26 V AC	**7ME3050-2BA20-1BA1**	
FUS060, 24 V, HART, Imperial cable glands	Transmitter for remote connection	IP65 (NEMA 4)	19 … 30 V DC/ 21 … 26 V AC	**7ME3050-2BA20-1BA2**	
FUS060, 24 V, PROFIBUS, Metric cable glands	Transmitter for remote connection	IP65 (NEMA 4)	19 … 30 V DC/ 21 … 26 V AC	**7ME3050-2BA20-1DA1**	
FUS060, 24 V, PROFIBUS, Imperial cable glands	Transmitter for remote connection	IP65 (NEMA 4)	19 … 30 V DC/ 21 … 26 V AC	**7ME3050-2BA20-1DA2**	
FUS060, ATEX, 24 V, HART, Metric cable glands	Transmitter for remote connection	IP65 (NEMA 4) ATEX approval	19 … 30 V DC/ 21 … 26 V AC	**7ME3050-2BA21-1CA1**	

Ordering of pre-configured FUS060 spare transmitters only via PVR (product variation request - special request).

© Siemens 2021

Selection and ordering data (continued)

Description	Article No.	
Operating/Display module	**7ME5933-0AC00**	
Electronics cover with glass plate (non Ex). Die cast aluminum, with corrosion-resistant Basic Polyester powder coating (min. 60 µm)	**7ME5933-0AC01**	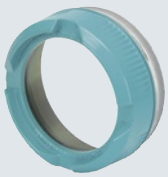
Cover for sensor cable and gasket. Die cast aluminum, with corrosion-resistant Basic Polyester powder coating (min. 60 µm)	**7ME5933-0AC02**	
Cover for mains supply/communication. Die cast aluminum, with corrosion-resistant Basic Polyester powder coating (min. 60 µm)	**7ME5933-0AC03**	
FUS060 Sensor connection PCBA, Standard versions only, 1 pc.	**A5E02551331**	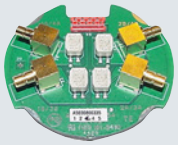
FUS060 Sensor connection PCBA, ATEX version only, 1 pc.	**A5E02551334**	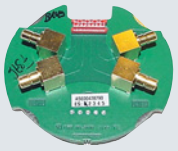
M20 cable gland set for FUS060 (M20) power and output connection, grey PA plastic, 2 pcs. • cables Ø 6 … 12 mm (0.24" … 0.47") • -40 … +100 °C (-40 … +212 °F)	**A5E02246350**	
M20 cable gland set for FUS060 ATEX version power and output connection, PA plastic, 1x in blue (ATEX Ex i) and 1x grey (ATEX Ex-e) • cables Ø 5 … 9 mm (0.20" … 0.35") • -20 … +95 °C (-4 … +203 °F)	**A5E02246356**	
1/2" NPT cable gland set for FUS060 (NPT) power and output connection, grey PA plastic, 2 pcs. • cables Ø 6 … 12 mm (0.24" … 0.47") • -40 … +100 °C (-40 … +212 °F)	**A5E02246396**	

Description	Article No.	
M25 cable gland set for the FUS060 PA (M25) power and output connection, prey PA plastic, 2 pcs. • cables Ø 9 … 16 mm (0.35" … 0.63") • -40 … +100 °C (-40 … +212 °F)	**A5E02246378**	
M16x1.5 cable gland set for FUS060 (M16) sensor connection, gray PA plastic, 2 pcs. and 2 pcs. blind. • cables Ø 5 … 9 mm (0.20" … 0.35") • -40 … +100°C (-40 … +212 °F)	**A5E02593526**	
M16 x 1.5 cable gland set for FUS060 (M16) sensor connection, brass chrome, 2 pcs. and 2 pcs. blind • cables Ø 5 … 9 mm (0.20" … 0.35") • -20 … +105 °C (-4 … +221 °F)	**A5E02246369**	
½" NPT cable gland set for FUS060 (NPT) sensor connection, 4 pcs. M16 bush to ½" NPT and 4 pcs. ½" NPT prey PA plastic glands • cables Ø 5 … 9 mm (0.20 … 0.35") • -20 … +100 °C (-4 … +212°F)	**A5E02247877**	

Cables for FUS060

Description	Article No.	
Coaxial cable for FUS060, (75 Ω, max. 70 °C (158 °F), black PVC), (2 pcs.)		
• 3 m (9.84 ft)	**A5E00875101**	
• 15 m (49.21 ft)	**A5E00861432**	
• 30 m (98.43 ft)	**A5E01278662**	
• 60 m (196.85 ft)	**A5E01278682**	
• 90 m (295.28 ft)	**A5E01278687**	
• 120 m (393.70 ft)	**A5E01278698**	
High temp. coaxial cable for FUS060; with 0.3 m brown PTFE high temp. transducer part, max. 200 °C (392 °F) and black PVC for remaining transmitter part with SMB plug, max. 70 °C (158 °F); impedance 75 Ω,(2 pcs.)		
• 3 m (9.84 ft)	**A5E00875105**	
• 15 m (49.21 ft)	**A5E00861435**	
• 30 m (98.43 ft)	**A5E01196952**	
Special coaxial cable sets for low temperature cryogenic systems; with SMB plug for transmitter SITRANS FUS060, PTFE material, temp. -200 … +200 °C (-328 … +392 °F), impedance 75 Ω, (2 pcs.)		
• 10 m (32.84 ft)	**A5E02085593**	
• 15 m (49.21 ft)	**A5E03262088**	
• 30 m (98.43 ft)	**A5E02085644**	
• 40 m (131.23 ft)	**A5E02085649**	

© Siemens 2021

3

Dimensional drawings

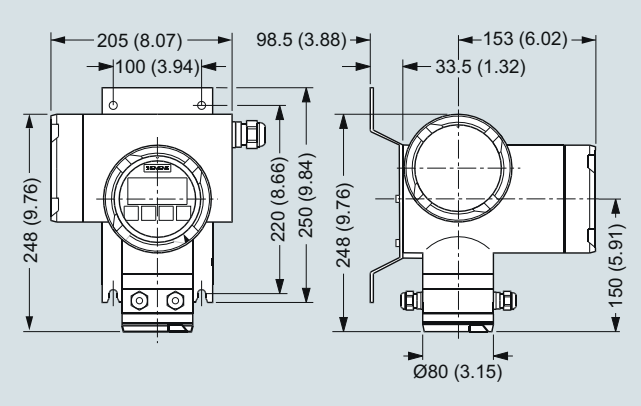

SITRANS FUS060 with standard mounting bracket, dimensions in mm (inch)

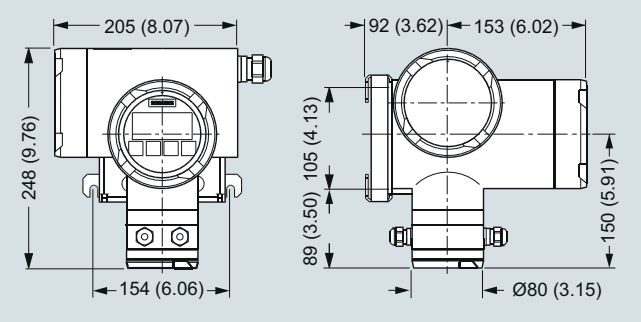

SITRANS FUS060 with optional special mounting bracket, dimensions in mm (inch)

Circuit diagrams

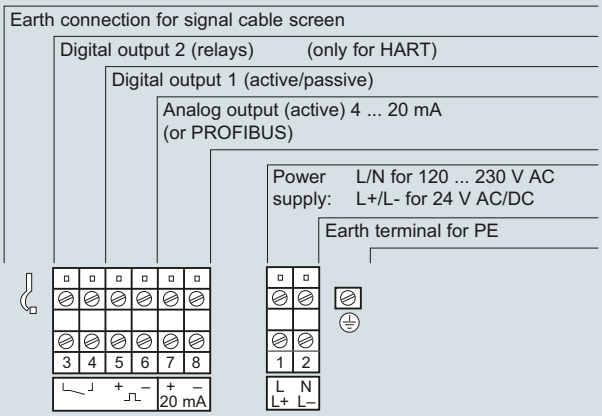

Electrical connection SITRANS FUS060

© Siemens 2021

Overview



SITRANS FUS080 is a transit time based transmitter designed for ultrasonic flow metering with any sensor in the FUS inline series SONOKIT, FUS380 and FUE380 up to DN 1200.

The ultrasonic flowmeter transmitter SITRANS FUS080 comes as battery or mains powered version. The SITRANS FUS080 is designed to measure flow water applications.

The SONOKIT retrofit flowmeter series are shown from page 3/282. The standard flowmeter series SITRANS FUS380 is described from page 3/292. The type approved flowmeter series for flow metering in energy meter custody transfer systems are named SITRANS FUE380.

Benefits

- Battery-powered up to 6 years
- 115/230 V mains-powered with back-up battery option in case of mains power failure
- Fast measuring frequency 15 Hz/0.5 Hz (230 V AC/Battery)
- Easy one button straight forward display
- IrDA optical interface for local communication
- 2-path measuring principle for optimum accuracy
- Compact or remote mounting
- Measures on all district water qualities and water conductivities
- No pressure drop
- Long-term stability
- 2 galvanic isolated digital outputs for easy connection to a calculator (potential free)
- 1 analog 4 to 20 mA output
- Bidirectional measurement, with 2 totalizers and outputs
- Dynamic range Q_i (min) : Q_s (max) up to 1:400
- Compact version with triax cables for highest EMC-protection

Application

The main application for flowmeters with the transmitter SITRANS FUS080 is measurement of water flow in district heating plants, local networks, boiler stations, substations, chiller plants, irrigations plants and other general water applications.

Design

The transmitter type SITRANS FUS080 is designed with fiberglass reinforced polyamide enclosure for remote or compact installation in normal areas. The remote versions are available with up to 30 meter distance from flowmeter to transmitter. When ordering as a compact version in the series FUS380 and FUE380 the transducer cables are pre-mounted at the sensor.

The transmitter is available in an IP67/NEMA 4X/6 enclosure and is designed for use in the flowmeters series:

- SONOKIT (1-path or 2-path)
- FUS380 (2-path)
- FUE380 (2-path)

The transmitter FUS080 is always ordered as part of a complete flowmeter system.

It can be manually ordered separately as spare part preprogrammed with the given sensor data.

Integration

The flowmeter pulse output is often used as input for an energy meter or as input for digital systems for remote reading.

SITRANS FUS380 has two pulsel outputs, with functions that can be individually selected.

The settings of the transmitter, e. g. flow and pulse output rate, are defined when ordering the complete flowmeter.

If the flowmeter forms part of an energy meter system for custody transfer, no further approvals are needed, except eventually local approvals on the flowmeter.

© Siemens 2021

Technical specifications

Input	
Measurement	Flow by measuring the transit time difference of ultrasonic signals through ultrasonic transducers in the sensor pipes. Supporting of 1-path or 2-path sensors in sizes DN 50 … 1200 measuring on water
Measuring rate	
• Battery mode	0.5 Hz
• Mains supply	Up to 15 Hz
• Back-up mode	0.5 Hz (at mains supply drop)
Flow rate	0.02 … 9 m/s (0.065 … 29.5 ft/s), bidirectional flow metering
Output	2 pulse or status outputs (A and B), individual galvanically isolated MOS relay outputs, passive mode, max. ± 35 V AC/DC, max. 50 mA
Max. pulse frequency	100 Hz at Q_s (Q_{max})
Pulse value and length	Selectable with the ordering of the flowmeter
Output A function	Pulse: forward, reverse, forward net, reverse net (preset: forward)
Output B function	Pulse: forward, reverse, forward net, reverse net (preset: forward) or alarm indication or call-up indication (preset: alarm)
Pulse value A and B	0.1 l/p, 0.25 l/p, 0.5 l/p, 1 l/p, 2.5 l/p, 10 l/p, 25 l/p, 50 l/p, 100 l/p, 250 l/p, 500 l/p, 1 m^3/p, 2.5 m^3/p, 5 m^3/p, 10 m^3/p, 25 m^3/p, 50 m^3/p, 100 m^3/p, 250 m^3/p, 500 m^3/p, 1 000 m^3/p
Pulse length (depending on Q_{max} by DN selection)	5, 10, 20, 50, 100, 200, 500 ms (standard 5 ms)
Alarm indication	Path 1 (F1), path 2 (F2) internal, failure (F3, F4), powers supply warning or low battery indication (F5), Q_{max} overflow (F6), pulse overflow (F7, F8), internal data logger warning (F9)
Analog output	Passive current output 4 ... 20 mA Data span pre-selectable depending on pipe size
Rated operation conditions	
Ambient conditions	
Ambient temperature	
• Operation	-10 … +60 °C (14 … 140 °F) (MID version: max. +55 °C (131 °F))
• Storage	-40 … +85 °C (-40 … +185 °F) (battery included)
Enclosure rating	IP67/NEMA 4X/6 to EN 60529 and DIN 40050
Electromagnetic compatibility	
• Emitted interference	To EN 55011/CISPR-11
• Immunity	To EN/IEC 61326-1 (Industry)
• MID approved (FUE380 series)	Environment class E2 and M1
Mechanical vibration	2 g, 1 … 800 Hz sinusoidal in all directions according to IEC 68-2-6
Weight of transmitter	Approx. 1.5 kg (3.3 lb)

Design	
Enclosure material	Fibre-glass reinforced polyamide, light gray color
Wall mounting kit	IP67/NEMA 4X/6 terminal box for the wall mounting of the transmitter, fiberglass reinforced polyamide with stainless steel bracket, cable glands entries: 2 x 2 M20 or PG 13.5 for power supply and outputs and 2 x M20 or PG 13.5 for the sensor cables, glands (supply and outputs and double cable entries for sensor cables) are included.
Sensor cable	Coaxial cable sets for remote transmitter up to 30 m (98.4 ft) long transducer cable, 75 Ω impedance, cables sets are prepared for the connection to the sensors Triax cables or integral version
Display and controls	
Display	LCD, 8 digits, additional 2 digits and symbols for status information
Resolution	Totalized information can be displayed with 1, 2 or 3 decimals or automatic adjustment (default)
Display setting	Flow unit: Preset: m^3/h Volume unit: Preset: m^3
Push button	One push button for menu selection and display information
Communication (IrDA optical eye)	IrDA – optical communication and control interface with Modbus RTU protocol for read or write transmitter settings and data via PC and PDM tool
Power supply	
Battery	D-cell battery pack, 3.6 V LiSOCl (Lithium Thionyl Chloride, 34 Ah), replaceable, life- and working-time up to 6 years
Mains	87 … 265 V AC (50 … 60 Hz) or 87 … 265 V AC (50 … 60 Hz) with D-cell single battery backup, 2.6 V LiSOCl (Lithium Thionyl Chloride, 17 Ah), replaceable, life time up to 8 years
Power consumption	
Mains version	Approx. 2.5 VA

© Siemens 2021

Technical specifications (continued)

SONOKIT, FUS380, FUE380

The flow values and settings are predefined according to dimension selection.

The transmitter settings are changeable by using the SW tool PDM (for FUE380 series some of the setting are only readable, restriction of the approval requirements).

Accuracy/Error in measurement:

(at reference conditions for FUS380 and FUE380 series, SONOKIT series will differ in the accuracy)

- Pulse output
  - ≤ ± 0.5 % of measured value at 0.5 … 10 m/s or
  - ≤ ± 0.25/V [m/s] % of measured value at flow < 0.5 m/s
- Repeatability ≤ 0.25 % of measured value at 0.5 … 10 m/s
- Reference conditions
  - Process temperature and ambient temperature: 25 °C ± 5 °C (77 °F ± 9 F)
  - Transmitter Warming-up time 30 min.
  - Installation conditions of the sensor: Upstream section > 10 x DN and downstream section > 5 DN

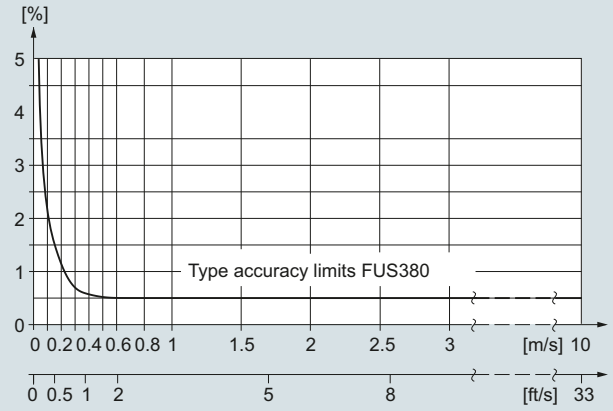

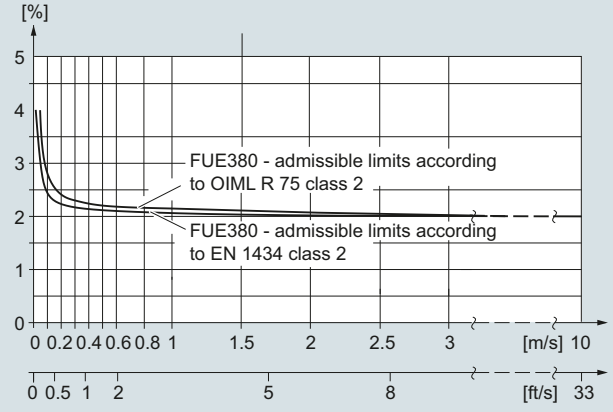

Output configuration

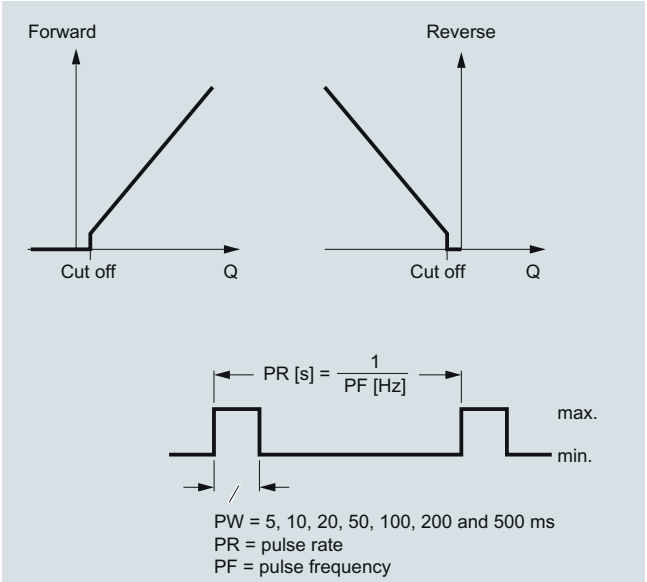

Pulse volume: output A/B configured as volume per pulse, calculated on forward/reverse or net forward/reverse flow. The volume per pulse is free scaleable (via PDM software).

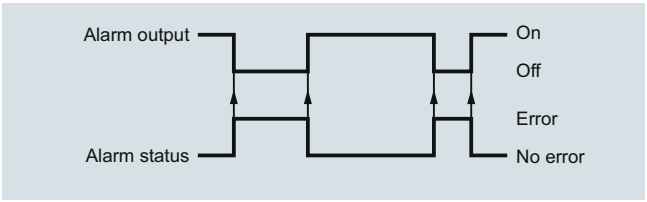

Pulse output B can be used as stated above or as alarm or call-up function.

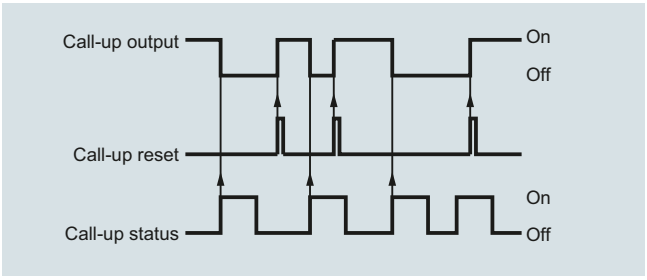

Call-up: the call-up output is active until manually reset by use of PDM tool. The call-up function is activated when an alarm is activated.

© Siemens 2021

3

Technical specifications (continued)

Current output

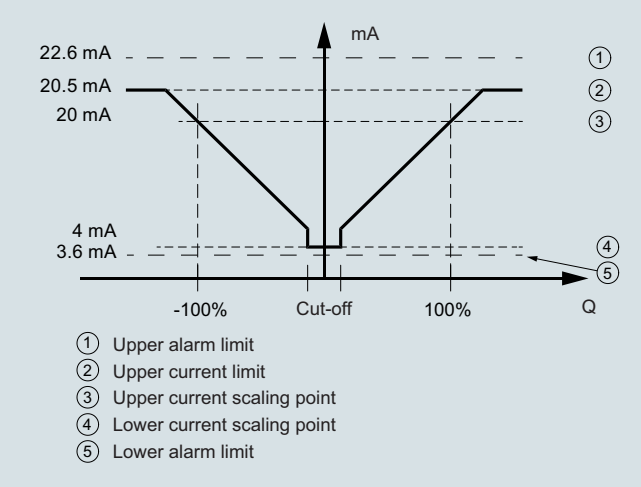

① Upper alarm limit
② Upper current limit
③ Upper current scaling point
④ Lower current scaling point
⑤ Lower alarm limit

Bidirectional flow

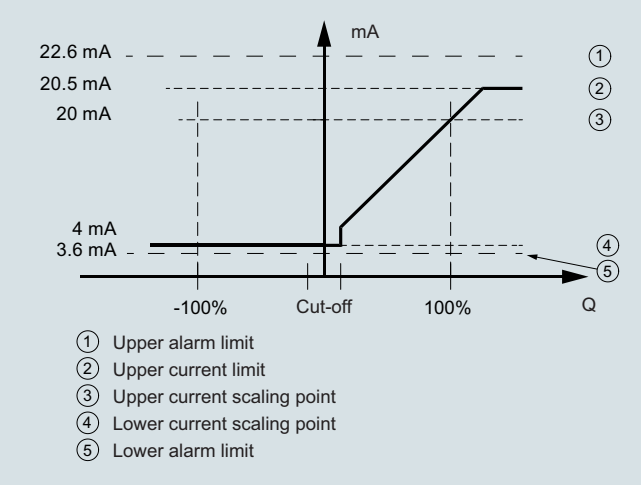

① Upper alarm limit
② Upper current limit
③ Upper current scaling point
④ Lower current scaling point
⑤ Lower alarm limit

Positive flow

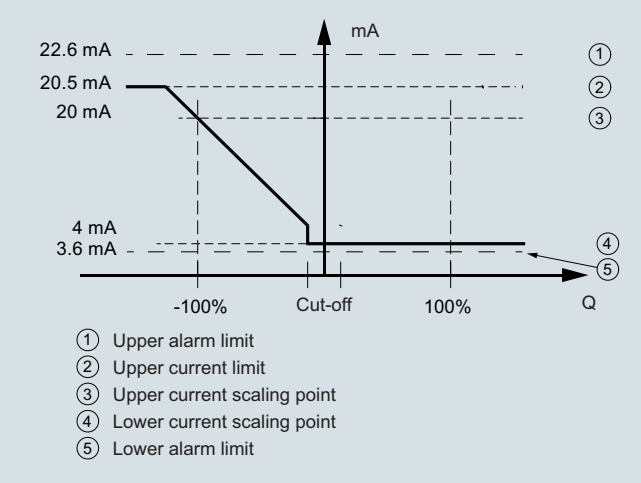

① Upper alarm limit
② Upper current limit
③ Upper current scaling point
④ Lower current scaling point
⑤ Lower alarm limit

Negative flow

Sensor coaxial cable for SONOKIT series with FUS080

Coaxial cable		
Standard coaxial cable (75 Ω)		
Outside diameter	Ø 5.8 mm	
Length	15, 30 m (49.2, 98.4 ft) between sensor and transmitter	
Material (outside jacket)	Black PE	
Ambient temperature	-10 … +70 °C (14 … 158 °F)	

Sensor coaxial cable for FUS380 /FUE380 series

Coaxial cable		
High temperature coaxial cable (75 Ω)	With special designed glands for connection in the sensor/transducer	
Outside diameter	Ø 5.13 mm (first 0.3 m (0.98 ft) part to the transducer), Ø 5,8 mm (for remaining cable to the transmitter – black holt melt junction part between (Ø 16 mm, length 70 mm)	
Length	Up to 30 m (98.4 ft) between sensor and transmitter	
Material (outside jacket)	Brown PTFE (0.3 m (9.84 ft) part) and black PE (for remaining cable)	
Ambient temperature	-200 … +200 °C (-328 … +392 °F) (brown PTFE transducer part) and -10 … +70 °C (14 … 158 °F) (black PE for remaining transmitter cable part)	

© Siemens 2021

Selection and ordering data

Transmitter FUS080 operating instructions, accessories and spare parts

Operating instructions

Description	Article No.
for use with SONOKIT • English	**A5E03059912**
integrated in FUS/FUE380 • English • German	**A5E00730100** **A5E00740611**

All literature is available to download for free, in a range of languages, at
http://www.siemens.com/processinstrumentation/documentation

Accessories

Description	Article No.	
Sun lid for FUS080 transmitter (frame and lid)	**A5E02328485**	
Brace (holder) for optical IrDA eye	**A5E00695277**	
IrDA infrared interface adapter with USB for data acquisition with 1.2 m (3.9 ft) cable	**FDK:087L4163**	
Process Device Manager SIMATIC PDM		
SIMATIC PDM For more details about SIMATIC PDM please go to chapter 8 "Digitalization and Communication".	**See the Selection and Ordering data on chapter 8 "Digitalization and Communication"**	

Spare parts

A spare part transmitter can be ordered for a specific system. In the description of the following spare part transmitters the related transmitter Article No. found on the device silver front label is noted.

Spare part transmitter for FUS380 systems (7ME3400)

Description	Article No.	
FUS080 transmitter 3.6 V battery (no battery included, to be ordered separate) as spare part transmitter for FUS380 flowmeter series. Transmitter Article No. 7ME3450-0AA10-2AA0	**A5E02729700**	
FUS080 transmitter 3.6 V battery (battery included) as spare part transmitter for FUS380 flowmeter series [1]. Transmitter Article No. 7ME3450-0AA10-2AA0	**A5E02729035**	
FUS080 transmitter 230 V mains as spare part transmitter for FUS380 flowmeter series. Transmitter Article No. 7ME3450-0AA10-2AA0	**A5E02699309**	
FUS080 transmitter 230 V mains with backup-battery as spare part transmitter for FUS380 flowmeter series. Transmitter Article No. 7ME3450-0AA40-2AA0	**A5E02729610**	

When ordering: Inform on flowmeter order no. and flowmeter serial no. (e.g. 7ME3400-xxxxx-xxxx-Z, XX.... and xxxxxxHxxx)

Spare part transmitter for FUE380 approved systems (7ME3410)

(only with MID approval marks, no MID verification – only a complete flowmeter can be MID-verified, i.e. sensor together with the transmitter)

Description	Article No.	
FUE080 transmitter 3.6 V battery (no battery included, to be ordered separate) as spare part transmitter for FUE380 flowmeter series. Transmitter Article No.7ME3450-0AA10-2AB0.	**A5E02734600**	
FUE080 transmitter 3.6 V battery (battery included) as spare part transmitter for FUE380 flowmeter series [1]. Transmitter Article No. 7ME3450-0AA20-2AB0	**A5E02734568**	
FUE080 transmitter 230 V mains as spare part transmitter for FUE380 flowmeter series. Transmitter Article No. 7ME3450-0AA30-2AB0	**A5E02734539**	
FUE080 transmitter 230 V mains with backup-battery as spare part transmitter for FUE380 flowmeter series. Transmitter Article No. 7ME3450-0AA40-2AB0	**A5E02734585**	

When ordering: Inform on flowmeter order no. and flowmeter serial no. (e.g. 7ME3410-xxxxx-xxxx-Z, XX.... and xxxxxxHxxx)

Spare part transmitter for SONOKIT systems (7ME3210/7ME3220)

Description	Article No.	
FUS080 transmitter 3.6 V battery (no battery included, to be ordered separate) as spare part transmitter for SONOKIT flowmeters. Transmitter Article No. 7ME3450-0AA10-2AA0	**A5E03048726**	
FUS080 transmitter 3.6 V battery (no battery included) as spare part transmitter for SONOKIT flowmeters [1]. Transmitter Article No. 7ME3450-0AA20-2AA0	**A5E03048714**	
FUS080 transmitter 230 V mains as spare part transmitter for SONOKIT flowmeters. Transmitter Article No. 7ME3450-0AA30-2AA0	**A5E03048701**	
FUS080 transmitter 230 V mains with backup-battery as spare part transmitter for SONOKIT flowmeters. Transmitter Article No. 7ME3450-0AA40-2AA0	**A5E03048719**	

When ordering: Inform on flowmeter order no. and flowmeter serial no. (e.g. 7ME3220-xxxxx-xxxx-Z, XX.... and xxxxxxHxxx)

[1] Lithium batteries are subject to special transportation regulations according to United Nations "Regulation of Dangerous Goods, UN 3090 and UN 3091". Special transport documentation is required to observe these regulations. This may influence both transport time and costs.

© Siemens 2021

3

Selection and ordering data (continued)

Spare part transmitter for FUS880 retrofitting systems (7ME3440)

Description	Article No.	
Sparepart FUS080 transmitter 3.6 V, incl. 3.6V dual batterie pack, USA version Transmitter Article No.: 7ME3450-0AA20-1CA0: Label, 0: Siemens FUS080 transmitter; Version, 0: Without connection box; Enclosure, A: IP67/NEMA 4X/6; Code A: Standard; Supply Voltage, 2: 3.6V DC battery; Ex. Approval, 0: no Ex approval; Display, 1: With display and unit label; Region version, C: USA: AcFt,CFS; Application, A: Standard FUS080 (for SITRANS Retrofit - 7ME344); Code, 0: Standard	**A5E03412669**	
FUS080 transmitter for FUS880 retrofit systems, USA version, incl. wall-mounting kit, 2 transducers and 2 pcs. 60 ft (20 m) of cables. Label, 0: Siemens FUS080 transmitter; Diameter, 0A: None; Wall Thickness, A: None; Pipe Material, 0: No Pipe; Track configuration, 1: 1-Track; Region version, 2: USA: AcFt, CFS; Transmitter, D: FUS080, IP67, Battery, Remote, unit label; Template, A: None; Transducer coax cable, 4: 20 m with gland	**7ME3440-0AA01-2DA4**	
FUS080 transmitter for FUS880 retrofit systems, USA version, incl. wall-mounting kit, 4 transducers and 4 pcs. 60 ft (20 m) of cables: Label, 0: Siemens FUS080 transmitter; Diameter, 0A: None; Wall Thickness, A: None; Pipe Material, 0: No Pipe; Track configuration, 3: 2-Track (X-Configuration); Region version, 2: USA: AcFt, CFS; Transmitter, D: FUS080, IP67, Battery, Remote, unit label; Template, A: None; Transducer coax cable, 4: 20 m with gland	**7ME3440-0AA03-2DA4**	

Description	Article No.	
Internal battery pack, one set of 2 D-cell (3.6 V 34 Ah)[1] • 1 pc. pack • 24 pcs. pack	 **A5E02679676** **A5E02896941**	
Single battery back-up to main supply (17 Ah)[1]	**A5E02679923**	
Battery cover for transmitter FUS080	**A5E00694468**	
PG 13.5 cable gland set for FUS080 power and output connection, black PA plastic, 2 pcs. • cables Ø 6 … 12 mm (0.24" … 0.47") • -40 … +100 °C (-40 … +212 °F)	**FDK:083G0228**	
PG 13.5 cable gland set (two cable entries) for FUS080 sensor connection, black PA plastic, 2 pcs. • cables Ø 6 … 12 mm (0.24" … 0.47") • -40 … +100 °C (-40 … +212 °F)	**A5E00694500**	
SITRANS FUS/FUE380 wall mounting kit for remote transmitter mounting, including connection plate (DN 50 … 1200/2" … 48")	**A5E00694509**	
SITRANS FUS/FUE380 terminal box for compact transmitter mounting, including connection plate, (bronze sensors only, DN 50 … 80/2" … 3")	**A5E01208138**	
SITRANS FUS/FUE380 terminal box for compact transmitter mounting, including connection plate, (steel sensors only, DN 100 … 1200/4" … 48")	**A5E00694660**	
FUS080 display and keypad with Siemens logo	**A5E00873496**	
FUS080 display and keypad neutral (without logo)	**A5E33147123**	

[1] Lithium batteries are subject to special transportation regulations according to United Nations "Regulation of Dangerous Goods, UN 3090 and UN 3091". Special transport documentation is required to observe these regulations. This may influence both transport time and costs.

© Siemens 2021

Selection and ordering data (continued)

Downloads for DEVICE description FUE380
http:/support.automation.siemens.com/WW/view/en/17320235

Sensor cables for FUS380/FUE380 flowmeters

Description	Article No.	
DN 50 … DN 80 flowmeters		
Coaxial cable for FUS080; with 0.3 m brown PTFE high temp. transducer part, max. 200 °C (392 °F) and black PVC for remaining transmitter part, max. 70 °C (158 °F); impedance 75 Ω		
5 m (16.4 ft) cable set (4 pcs.) for DN 50 … DN 80 (2“ … 3“) remote mounting	**A5E01208092**	
10 m (32.8 ft) cable set (4 pcs.) for DN 50 … DN 80 (2“ … 3“) remote mounting	**A5E01208114**	
20 m (65.6 ft) cable set (4 pcs.) for DN 50 … DN 80 (2“ … 3“) remote mounting	**A5E01208117**	
30 m (98.4 ft) cable set (4 pcs.) for DN 50 … DN 80 (2“ … 3“) remote mounting	**A5E01208121**	
0.5 m (1.64 ft) cable set (4 pcs.) for DN 50 … DN 80 (2“ … 3“) for compact version of FUS380/FUE380	**A5E01208126**	
DN 100 … DN 1200 flowmeters		
Coaxial cable for FUS080; with 0.3 m brown PTFE high temp. transducer part, max. 200 °C (392 °F) and black PVC for remaining transmitter part, max. 70 °C (158 °F); impedance 75 Ω		
5 m (16.4 ft) cable set (4 pcs.) for DN 100 … DN 1200 (4“ … 48“) remote mounting	**A5E00695476**	
10 m (32.8 ft) cable set (4 pcs.) for DN 100 … DN 1200 (4“ … 48“) remote mounting	**A5E00695479**	
20 m (65.6 ft) cable set (4 pcs.) for DN 100 … DN 1200 (4“ … 48“) remote mounting	**A5E00695480**	
30 m (98.4 ft) cable set (4 pcs.) for DN 100 … DN 1200 (4“ … 48“) remote mounting	**A5E00695483**	
1 m (3.28 ft) cable set (4 pcs.) for DN 100 … DN 1200 (4“ … 48“) for compact version of FUS380/FUE380	**A5E00695486**	

Sensor cables for SONOKIT flowmeter with FUS080

Description	Article No.	
15 m (49.2 ft) cable set (2 pcs.) remote mounting with SONOKIT flowmeters	**A5E02478541**	
30 m (98.4 ft) cable set (2 pcs.) remote mounting with SONOKIT flowmeters	**A5E02478551**	

Sensor cables for FUS880 retrofitting system (7ME3440)

Description	Article No.	
Coaxial cable with transducer connection		
for use in FUS880 and SONO 3300 sensors; with 0.3 m brown PTFE high temperature transducer part, max. 200 °C (392 °F) and black PVC for the remaining transmitter part, max. 70 °C (158 °F); cable impedance 75 W.W.		
• 1 × 10 m (32.8 ft)	**FDK:085L2400**	
• 1 × 20 m (65.6 ft)	**FDK:085L2401**	
• 1 × 30 m (98.4 ft)	**FDK:085L2402**	
Transducer spare part set of two transducers with gaskets for STRANS FUS880 retrofitting systems	**FDK:087H3007**	

© Siemens 2021

Dimensional drawings

FUS080 transmitter IP67/NEMA 4X/6, wall mounting and compact mounting

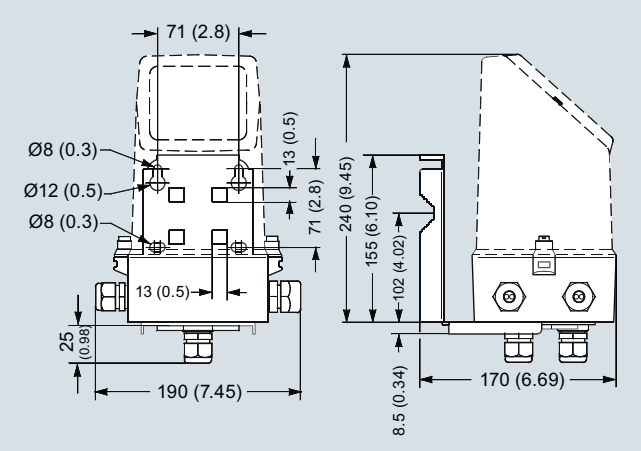

Transmitter wall mounted, dimensions in mm (inch)

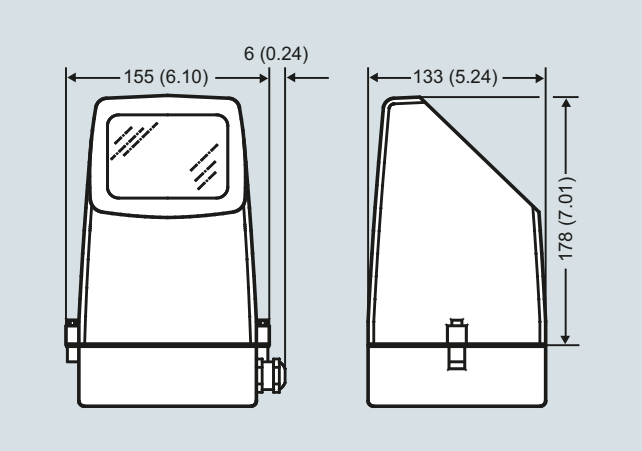

Transmitter compact mounted, dimensions in mm (inch)

© Siemens 2021

Circuit diagrams

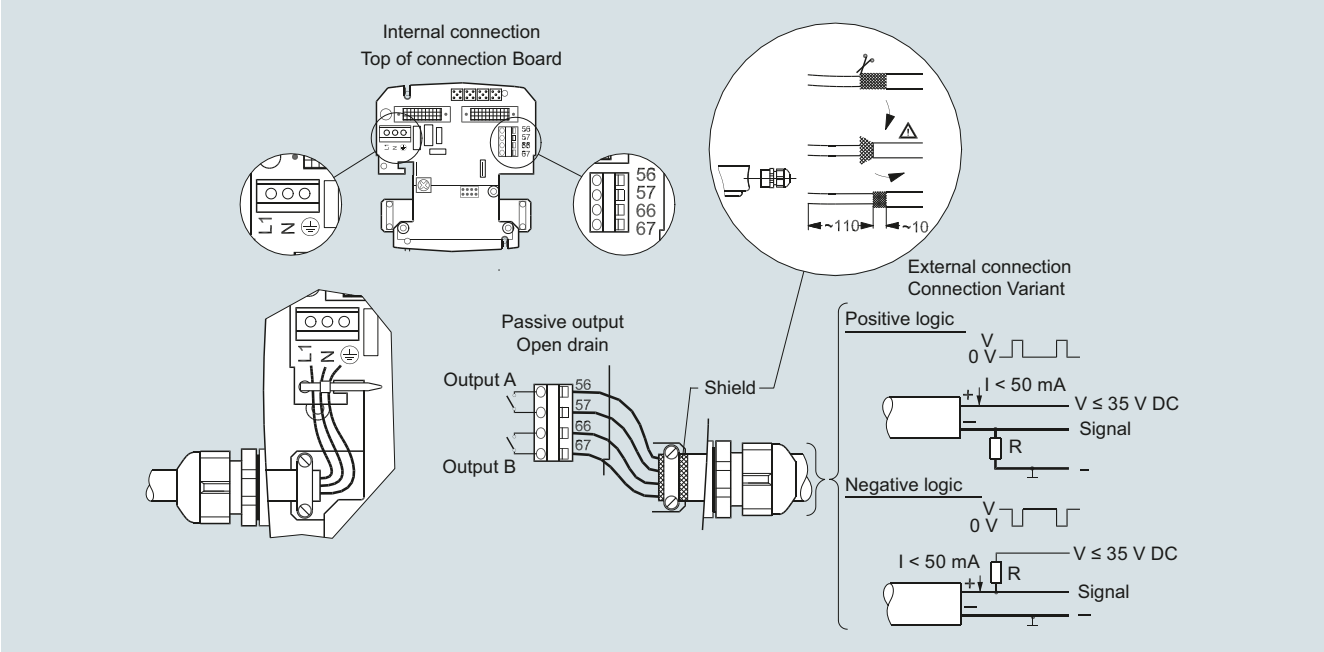

Electrical connection of SITRANS FUS080

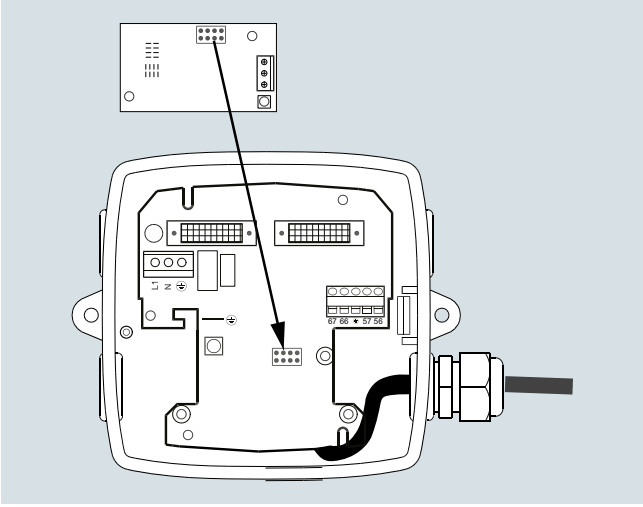

Analog module SITRANS FUS380

© Siemens 2021

SONO 3300/FUS060 flowmeter

Overview



The combination of SONO 3300 sensor and FUS060 transmitter is ideal for applications within the general industry. Measurements are independent of liquid temperature, density, pressure and conductivity. Transducers cannot be replaced.

Benefits

- Robust remote transmitter FUS060
- Robust design for industrial applications
- Measures all liquids less than 350 cSt, conductive or non-conductive
- No pressure drop
- Reliable and accurate flow measurements
- Long-time stability
- ATEX approval

Application

The main application for SONO 3300/FUS060 ultrasonic flowmeter is measurement of volume.

SONO 3300/FUS060 can be used for water and treated waste water.

Design

The SONO 3300/FUS060 consists of a casted sensor (DN 50 to 80 (2" to 3")), welded pipes (DN 100 to 300 (4" to 12")) and a transmitter FUS060.

The transmitter can only be mounted separately.

The internal signal cables from transducers to sensor connection box are protected from an aggressive environment by stainless steel pipes.

Sensor installation

See system information.

© Siemens 2021

Technical specifications

The transmitter related to this system is the SITRANS FUS060. Technical specifications to the FUS060 see page 3/254.

2-path sensor with flanges and inline transducers	
Error in measurement	
Error in measurement at reference conditions	V > 0.5 … 10 m/s, < ± 0.5 % of rate (v = flow speed)
Max. flow velocity	10 m/s (32 ft/s)
Nominal size	DN 50, DN 65, DN 80, DN 100, DN 125, DN 150, DN 200, DN 250, DN 300 (2" … 12")
Media temperature	Separate version: -10 … +160 °C (14 … 320 °F)
Ambient temperature (sensor)	Separate version: -20 … +60 °C (-4 … +140 °F)
	Storage: -40 … +85 °C (-40 … +185 °F)
Enclosure	Standard version: IP67 (NEMA 4X/NEMA 6)
	ATEX version: As standard, but with ATEX approval (see below)
Process connections	
PN designated EN 1092-1 type 11 (B)	• DN 50 … 300 (2" … 12"), PN 40
	• DN 100 … 300 (4" … 12"), PN 16
	• DN 200 ... 300 (8" … 12"), PN 10
Class designated EN 1759-1	• DN 50 ... 300 (2" … 12"), class 150
	• DN 50 ... 300 (2" … 12"), class 300
Transducer	Inline version welded into pipe
Materials	
Pipe	• DN 50 ... DN 80 (2" … 3"): Cast steel EN 1.1131-GS-15Mn5
	• DN 100 ... DN 300 (4" … 12"): Carbon steel EN 1.0345-P235GH
Flange	• DN 50 ... DN 300 (2" … 12"): EN 1.0025-S235JRG2
Class	ASTM A105
Transducer	Stainless steel AISI 316 or similar
Certificates and approvals	
Conformity certificate	The devices are supplied as standard with a Siemens Certificate of Conformity on DVD.
Material certificate	Material certificate according to EN 10204-3.1 available
NDT examination report	Extended material certificate is optionally available on special request (PVR)
Calibration report	A standard calibration report is shipped with each flowmeter.
Extended accredited ISO/IEC 17025 calibration certificates	Optionally available
Approvals	No custody transfer approvals
Ex approval	System ATEX approval for SONO 3300 with remote transmitter FUS060-Ex (ATEX II 2 G Ex dem [ia/ib] IIC T6/T4/T3 Gb)
	For Ex version the transducer cable length is restricted to 3 m (9.84 ft), in order to meet requirements.

The sensors are approved according to EU directive 2014/68/EU regarding fluid group 1, classified in category III. Design according to EN 13480 (PED Directive).

Coax cable between sensor SONO 3300 and transmitter FUS060

Standard Coax cable (75 Ω)	**Coax cable with SMB straight plug on one end for the FUS060 connector**
Outside diameter	Ø 5.8 mm
Length	3, 15, 30, 60, 90, 120 m (9.84, 49.21, 98.43, 196.85, 295.28, 393.70 ft) between sensor and transmitter
Material (outside jacket)	black PE
Ambient temperature	-10 … +70 °C (14 … 158 °F)
High temperature Coax cable (75 Ω)	Coax cable with SMB straight plug on one end for the FUS060 connector
Outside diameter	Ø 5.13 mm (first 0.3 m (9.84 ft) part to the transducer), Ø 5,8 mm (for remaining cable to the transmitter – with SMB plug at the end) and between these is a black hot melt junction Ø 16 mm (length 70 mm)
Length	3, 15, 30, 60, 90, 120 m (9.84, 49.21, 98.43, 196.85, 295.28, 393.70 ft) between sensor and transmitter (max. 3 m (9.84 ft)) transducer cable length for Ex area mounted transmitters
Material (outside jacket)	Brown PTFE (0.3 m (9.84 ft) part) and black PE (for remaining cable)
Ambient temperature	-200 … +200 °C (-328 … +392 °F) (brown PTFE transducer part) and -10 … +70 °C (14 … 158 °F) (black PE for remaining transmitter cable part)



© Siemens 2021

3

Selection and ordering data

Article No.

Sensor SONO 3300 with transmitter FUS060 ↗	**7ME3300-** ■■■■0 - ■■■■
↗ Click on the Article No. for the online configuration in the PIA Life Cycle Portal.	
Diameter / **Qn setting [m^3/h]**	
DN 50 (2") / 10	1 A
DN 50 (2") / 26	1 B
DN 50 (2") / 60	1 D
DN 65 (2½") / 15	1 E
DN 65 (2½") / 42	1 F
DN 65 (2½") / 100	1 H
DN 80 (3") / 20	1 J
DN 80 (3") / 60	1 K
DN 80 (3") / 150	1 M
DN 100 (4") / 36	1 N
DN 100 (4") / 100	1 P
DN 100 (4") / 230	1 R
DN 125 (5") / 50	1 S
DN 125 (5") / 150	1 T
DN 125 (5") / 360	1 V
DN 150 (6") / 80	2 A
DN 150 (6") / 220	2 B
DN 150 (6") / 500	2 D
DN 200 (8") / 120	2 E
DN 200 (8") / 380	2 F
DN 200 (8") / 900	2 H
DN 250 (10") / 200	2 J
DN 250 (10") / 600	2 K
DN 250 (10") / 1400	2 M
DN 300 (12") / 300	2 N
DN 300 (12") / 850	2 P
DN 300 (12") / 2200	2 R
Flange norm and pressure rating	
(All sizes are not available in all pressure ratings)	
EN 1092-1	
• PN 10 (DN 200 ... 300)	B
• PN 16 (DN 80 ... 300)	C
• PN 40 (DN 50 ... 300)	E
ANSI B16.5	
• Class 150 (DN 50 ... 300)	H
• Class 300 (DN 50 ... 300)	J
Sensor type (approval) and transmitter mounting	
IP67 standard, remote transmitter	1
IP67 Ex-version (ATEX), remote transmitter (Ex-version)	3
Cable gland entries in FUS060 and SONO 3300	
Cable glands M20 in sensor and in transmitter M25/20/16 x 1.5	1
Transmitter version of SITRANS FUS060	
IP65 (NEMA 4), 120/230 V AC	N
IP65 (NEMA 4), 24 V AC/DC	P
IP65 (NEMA 4), 24 V AC/DC, Ex-version (ATEX)	Q

Article No.

Sensor SONO 3300 with transmitter FUS060	**7ME3300-** ■■■■0 - ■■■■
FUS060 output module	
HART, 4 ... 20 mA, 1 pulse output, 1 relay	B
HART, Ex version, 4 ... 20 mA, 1 pulse output, 1 relay	C
PROFIBUS PA, 1 pulse/frequency	D
Transducer coaxial cable	
4 x 3 m, max. 70 °C (158 °F), the only option for Ex i	0
4 x 15 m, max. 70 °C (158 °F)	1
4 x 30 m, high temp. max.200 °C (392 °F)	2
4 x 30 m, max. 70 °C (158 °F)	3
4 x 60 m, max. 70 °C (158 °F)	4
4 x 90 m, max. 70 °C (158 °F)	5
4 x 120 m, max. 70 °C (158 °F)	6
4 x 3 m, high temp. max. 200 °C (392 °F), the only option for Ex i	7
4 x 15 m, high temp. max. 200 °C (392 °F)	8

Additional information	Order code
Please add "**-Z**" to Article No. and specify Order code(s) and plain text.	
Calibration	
Production calibration DN 50 ... DN 300 (with certificate, 2 x 3 points in 10 %, 25 % and 100 % Qn)	**Included**
Accredited Siemens ISO/IEC 17025 calibration for DN 50 to DN 200 with Qn as selected in Diameter. Calibration certificate: 2 x 5 points in 5 %, 10 %, 25 %, 50% and 100 % Qn (max. flow 630 m^3/h).	**D20**
Accredited Siemens ISO/IEC 17025 calibration for DN 200 to DN 300 with Qn as selected in Diameter. Calibration certificate: 2 x 5 points in 5 %, 10 %, 25 %, 50 % and 100 % Qn (max. flow 2000 m^3/h).	**D21**
Material certificate	
EN 10204-3.1	**F10**
Tag name plate	
Stainless steel TAG plate (1 x 24 x 80 mm), wire fixed. Font size depends on text length: 8 mm for 1 ... 10 characters, 4 mm for 11 ... 20 characters (specify in plain text).	**Y17**

Please use online Product selector to get latest updates:

https://www.pia-portal.automation.siemens.com

© Siemens 2021

Selection and ordering data (continued)

Flowmeter SONO 3300 with FUS060 operating instructions, accessories and spare parts

Operating instructions

Description	Article No.
SITRANS FUS060	
• English	**A5E01204521**
• German	**A5E02123845**
SITRANS F US SONO 3300	
• English	**A5E01365400**
• German	**A5E02690975**

All literature is available to download for free, in a range of languages, at
http://www.siemens.com/processinstrumentation/documentation

Accessories

Potting kit

Description	Article No.	
Potting kit for terminal box of SONO 3200 transducers for IP68/NEMA 6P (not for Ex sensors)	**FDK:085L2403**	

Spare parts

Cables for SONO 3300 with FUS060

(only as spare parts)

Description	Article No.	
Coax cable for FUS060, (75 Ω, max. 70 °C (158 °F), black PVC) (2 pcs.)		
• 3 (9.84)	**A5E00875101**	
• 15 (49.21)	**A5E00861432**	
• 30 (98.43)	**A5E01278662**	
• 60 (196.85)	**A5E01278682**	
• 90 (295.28)	**A5E01278687**	
• 120 (393.70)	**A5E01278698**	
High temp. coaxial cable for FUS060; with 0.3 m brown PTFE high temp. transducer part (max. 200 °C (392 °F)) and black PVC transmitter part with SMB plug (max. 70 °C (158 °F)); impedance 75 Ω (2 pcs.)		
• 3 (9.84)	**A5E00875105**	
• 15 (49.21)	**A5E00861435**	
• 30 (98.43)	**A5E01196952**	

Cable glands (for the SONO 3300 terminal box)

(only as spare parts)

Description	Article No.	
Type M20, material nickel plated brass, 2x cables Ø 5 … 6 mm, temperature range -25 … +200 °C (-13 … +392 °F) (2 pcs.)	**A5E02246329**	

Description	Article No.	
SONO 3300 terminal box lid, in stainless steel painted black (1 pc.)	**FDK:085U1505**	
Gasket for SONO 3300 terminal lid in EPDM (1 pc.)	**FDK:085U1820**	
SONO 3300 stainless steel terminal box (1 pc.), M20 cable gland version, incl. lid in stainless steel (painted black) and gasket in EPDM	**A5E00836867**	
Coax cable connecting plate (1 pc.) for SONO 3300 terminal box and use with transmitter type FUS060	**A5E02593568**	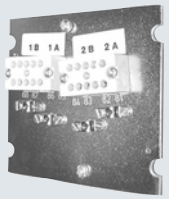

© Siemens 2021

3

Dimensional drawings

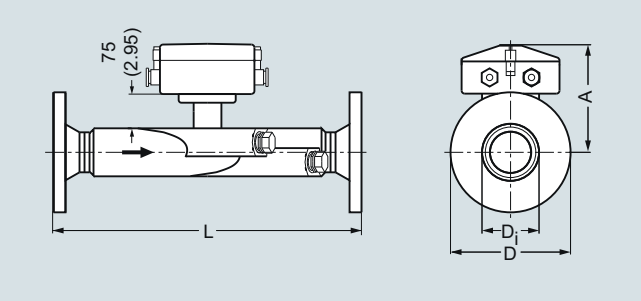

Sensor SONO 3300, dimensions in mm (inch)

DN	EN 1092-1																	
	PN 10						PN 16						PN 40					
	L [1]		D		D_i		L [1]		D		D_i		L [1]		D		D_i	
	mm	inch	mm	inch	mm	inch	mm	inch	mm	inch	mm	inch	mm	inch	mm	inch	mm	inch
50													475	18.70	165	6.50	52.60	2.07
65													475	18.70	185	7.28	62.70	2.47
80							380	14.96	200	7.87	78.00	3.07	400	15.75	200	7.87	78.00	3.07
100							375	14.76	220	8.66	102.40	4.00	400	15.75	235	9.25	102.40	4.00
125							375	14.76	250	9.84	128.30	5.05	400	15.75	270	10.63	128.30	5.05
150							360	14.17	285	11.22	154.20	6.07	400	15.75	300	11.81	154.20	6.07
200	400	15.75	340	13.39	207.30	8.16	400	15.75	340	13.39	207.30	8.16	450	17.72	375	14.76	206.50	8.13
250	400	15.75	395	15.55	260.40	10.25	400	15.75	405	15.94	260.40	10.25	500	19.69	450	17.72	258.80	10.19
300	400	15.75	445	17.52	309.70	12.19	420	16.54	460	18.11	309.70	12.19	500	19.69	515	20.28	307.90	12.12

DN	ANSI														Weight[2]			
	150 lb						300 lb						EN and ANSI		EN		ANSI	
	L [1]		D		D_i		L [1]		D		D_i		A					
	mm	inch	mm	inch	mm	inch	mm	inch	mm	inch	mm	inch	mm	inch	kg	lbs	kg	lbs
50 mm/2“	510	20.08	152	5.98	52.6	2.07	520	20.47	165	6.50	52.6	2.07	180	7.09	14	30.9	17	37.5
65 mm/2½“	510	20.08	178	7.01	62.7	2.47	520	20.47	190	7.48	62.7	2.47	186	7.32	16	35.3	20	44
80 mm/3“	420	16.54	191	7.52	78.0	3.07	440	17.32	210	8.27	78.0	3.07	193	7.60	19	42	23	51
100 mm/4“	420	16.54	229	9.01	102.4	4.03	440	17.32	254	10	102.4	4.03	205	8.07	25	55	35	78
125 mm/5“	440	17.32	254	10.00	128.3	5.05	460	18.11	279	10.98	128.3	5.05	218	8.58	29	64	40	89
150 mm/6“	430	16.93	279	10.98	154.2	6.07	450	17.71	318	12.52	154.2	6.07	232	9.13	35	78	50	111
200 mm/8“	480	18.90	343	13.50	202.7	7.98	500	19.69	381	15	202.7	7.98	256	10.08	54	119	72	160
250 mm/10“	490	19.29	406	15.98	254.5	10.02	520	20.47	444	17.48	254.5	10.03	283	11.14	85	189	98	217
300 mm/12“	550	21.65	483	19.02	306.3	12.06	580	22.83	521	20.51	306.3	12.06	309	12.17	115	256	142	322

[1] Length tolerance (mm): DN 50 … 100 +2/-3, DN 125 … 200 +3/-4, DN 250 … 300 +4/-5

[2] Approximate weigths without transmitter FUS060 - weigth of FUS060 is 4.4 kg (9.7 lb)

Circuit diagrams

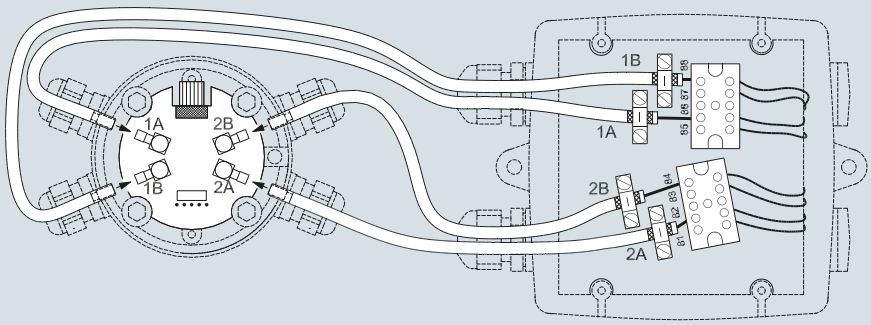

Electrical connection of SITRANS FUS060 and SONO 3300

© Siemens 2021

Overview



SONO3100/FUS060

The combination of the SONO 3100 sensor and the FUS060 transmitter is ideal for applications where process shut-down is impossible during service and where there is a need for extreme high/low temperatures and pressures.

Transducers can be changed without interrupting operation. SONO 3100 can optionally be delivered as a 1-path or 2-path solution.

Benefits

- Transducers can be replaced under pressure
- Measurement of all liquids less than 350 Cst, conductive or non-conductive
- No pressure drop
- Reliable and accurate flow measurements
- Long-time stability
- On request as special versions:
  - Special sensor material, e.g. Duplex, stainless steel
  - High/low temperature sensor version: +250 °C (+482 °F)/-200 °C (-328 °F) sensors
  - Pressure rating 430 bar (6235 psi)
  - Special sensor sizes down to DN 25
  - 1-path or 2-path sensor technology

Application

The main application for SONO 3100 in combination with transmitter type FUS060 is to measure volume flow within:

- Water and waste water

Design

The SONO 3100 in combination with FUS060 consists of a SONO 3100 sensor, SONO 3200 transducers with O-rings or flanges depending on selection - and a FUS060 transmitter.

SONO 3100 is basically supplied in a 2-path solution with flanges in sizes from DN 100 to DN 500 and without flanges in sizes from DN 100 to DN 300.

2-path standard, 1-path special versions available on request, depending on size (DN 25 to DN 500).

SONO 3100 is as standard available in carbon steel from DN 100 to DN 500.

FUS060 is designed for remote wall mounting only.

Technical specifications

The transmitter related to this system is the SITRANS FUS060. The technical specifications to the FUS060 see page 3/254.

2-paths sensor fitted with four SONO 3200 transducers	
Error in measurement	
Error in measurement at reference conditions	V > 0.5 … 10 m/s, < ± 0.5 % of rate (v = flow velocity)
Max. flow velocity	10 m/s (32 ft)
Nominal size	DN 100 ... 500 (4 ... 20")
Media temperature	
• Standard	-10 … +200 °C (14 … 392 °F)
• ATEX Ex d version	-20 … +180 °C (-4 … +356 °F)
• ATEX Ex i version	-10 … +190 °C (14 … 374 °F)
• Specials	-200 °C (-328 °F) or up to 250 °C (482 °F)
Ambient temperature	
• Standard and Ex-i version	-20 … +60 °C (-4 … +140 °F)
• Ex d version	-20 … +180 °C (-4 … +356 °F)
Enclosure	IP67 (NEMA 4X/6)/IP68 (NEMA 6P) and ATEX (see below)
Process connections	
PN designated EN 1092-1, type 11 (B)	
Pipe material carbon steel	• DN 200 … DN 500 (8" … 20"), PN 10 • DN 100 … DN 500 (4" … 20"), PN 16 • DN 200 … DN 500 (8" … 20"), PN 25 • DN 100 … DN 500 (4" … 20"), PN 40
Class designated EN 1759-1	
Pipe material carbon steel	• DN 100 … DN 500 (4" … 20") Class 150 • DN 100 … DN 300 (4" … 12") Class 300
Without flanges (EN 10217), weld-in version only in carbon steel	• DN 350 … DN 500 (14" … 20"), PN 10 • DN 100 … DN 500 (4" … 20"), PN 16 • DN 200 … DN 500 (8" … 20"), PN 25 • DN 100 … DN 500 (4" … 20"), PN 40
Transducer SONO 3200	O-ring or flange versions
Materials	
Pipe	Steel EN 1.0345-P235GH
Flange	
PN	EN 10025-S235JRG2, 1E1
Class	ASTM A105,1,1
Transducer body	Stainless steel AISI 316 or similar
Transducer terminal house	Stainless steel AISI 316 or plastic PA 6.6

© Siemens 2021

Technical specifications (continued)

Certificates and approvals	
System ATEX approval for SONO 3100 together with transmitter FUS060-Ex	ATEX II 2 G Ex dem [ia/ib] IIC T6/T4/T3 Gb or ATEX II 2G Ex d IIC T3-T6 Gb with SONO 3200 Ex d transducers (for standard FUS060 transmitter, installed outside of Ex zone) For FUS060 Ex version the transducer cable length is restricted to 3 m (9.84 ft), in order to meet requirements for electrical immunity.
Conformity certificate CE	The devices are supplied as standard with a Siemens Certificate of Conformity on DVD.
Material certificates	Material certificate according to EN 10204-3.1 is optionally available.
NDT examination report	Extended material certificate is optionally available.
Pressure certificate	Pressure test according EN 1024-2.3 optionally available
Calibration report	A standard calibration report is shipped with each flowmeter. Optionally available: Extended accredited ISO/IEC 17025 calibration certificates
Approvals	No custody transfer approvals

The sensor SONO 3100 with transmitter FUS060 conforms to Product Family Standard EN 61326/A3 appendix A (Title: Electrical Equipment for Measurement control and laboratory use – EMC requirements).

The sensors are approved according to EU directive 2014/68/EU regarding fluid group 1, classified in category III. Design according to EN 13480 (PED Directive).

The SONO 3100 as weld-in version does not include the flanges. Thus, it can neither be tested nor approved according to PED. After the installation, all installation-related activities (welding, pressure test etc.) are the responsibility of the customer.

Selection and ordering data

		Article No.
SITRANS F US SONO 3100 sensor 2-path ↗		**7ME3100-**
↗ Click on the Article No. for the online configuration in the PIA Life Cycle Portal.		
Diameter	**Qn setting [m^3/h]**	
DN 100 (4")	28	**1 N**
DN 100 (4")	100	**1 P**
DN 100 (4")	220	**1 R**
DN 125 (5")	44	**1 S**
DN 125 (5")	150	**1 T**
DN 125 (5")	360	**1 V**
DN 150 (6")	64	**2 A**
DN 150 (6")	220	**2 B**
DN 150 (6")	500	**2 D**
DN 200 (8")	110	**2 E**
DN 200 (8")	380	**2 F**
DN 200 (8")	900	**2 H**
DN 250 (10")	180	**2 J**
DN 250 (10")	600	**2 K**
DN 250 (10")	1300	**2 M**
DN 300 (12")	300	**2 N**
DN 300 (12")	850	**2 P**
DN 300 (12")	2200	**2 R**
DN 350 (14")	350	**2 S**
DN 350 (14")	1000	**2 T**
DN 350 (14")	2800[1)]	**2 V**
DN 400 (16")	450	**3 A**
DN 400 (16")	1300	**3 B**
DN 400 (16")	3600	**3 D**
DN 500 (20")	1300	**3 J**
DN 500 (20")	2200	**3 K**
DN 500 (20")	4200[1)]	**3 M**
Flange norm and pressure rating		
(All sizes are not available in all pressure ratings)		
EN 1092-1		
• PN 10 (DN 200 ... 600)		**B**
• PN 16 (DN 100 ... 600)		**C**
• PN 25 (DN 200 ... 600)		**D**
• PN 40 (DN 100 ... 500)		**E**
ANSI B16.5		
• Class 150 (DN 100 ... 300)		**H**
• Class 300 (DN 100 ... 300)		**J**
Pipe without flanges (EN 10217) (weld-in version)[2)]		
• PN 10 (DN 200 ... 600)		**P**
• PN 16 (DN 100 ... 600)		**Q**
• PN 25 (DN 200 ... 600)		**R**
• PN 40 (DN 100 ... 500)		**S**

© Siemens 2021

Selection and ordering data

	Article No.
SITRANS F US SONO 3100 sensor 2-path	**7ME3100-** ■■■■■ - ■■■■
Pipe and flange material	
Carbon steel (DN 100 ... 1200)	**1**
Transducer type and approval	
IP67 (NEMA 4X/6) PA housing, PN 40, O-ring, 50 mm, 100 °C (212 °F) (DN 100 ... 600)	**1**
IP68 SS housing, PN 40, O-ring, 50 mm, 200 °C (392 °F) (DN 100 ... 600)	**2**
IP68 SS housing, PN 40, O-ring, 50 mm, 180 °C (356 °F), Ex d ATEX approval (only with standard FUS060) (DN 100 ... 600)	**3**
IP67 (NEMA 4X/6) PA housing, PN 40, flange, 88 mm, 100 °C (212 °F) (DN 100 ... 300)	**4**
IP68 SS housing, PN 40, flange, 88 mm, 200 °C (392 °F) (DN 100 ... 300)	**5**
IP68 SS housing, PN 40, flange, 88 mm, 180 °C (356 °F), Ex d ATEX approval (only with standard FUS060) (DN 100 ... 300)	**6**
IP67 SS housing, PN 40, O-ring, 50 mm, 90 °C (374 °F), Ex i ATEX approval (only with FUS060 Ex-version) (DN 100 ... 600)	**7**
IP67 SS housing, PN 40, flange, 88 mm, 190 °C (374 °F), Ex i ATEX approval (only with FUS060 Ex-version) (DN 100 ... 300)	**8**
Cable gland entries	
Cable glands M20 in transducers and in transmitter M25/20/16 x 1.5	**1**
Cable glands ½" NPT in transducers and in transmitter	**2**
Transmitter version of SITRANS FUS060	
IP65 (NEMA 4), 120/230 V AC	**N**
IP65 (NEMA 4), 24 V AC/DC	**P**
IP65 (NEMA 4), 24 V AC/DC, Ex-version (ATEX)	**Q**
FUS060 output module	
HART, 1 pulse output, 1 relay	**B**
HART Ex, 1 pulse output, 1 relay	**C**
PROFIBUS PA, 1 pulse/frequency	**D**
Transducer coaxial cable	
4 x 3 m, max. 70 °C (158 °F), the only option for Ex i	**0**
4 x 15 m, max. 70 °C (158 °F)	**1**
4 x 30 m, high temp. max.200 °C (392 °F)	**2**
4 x 30 m, max. 70 °C (158 °F)	**3**
4 x 60 m, max. 70 °C (158 °F)	**4**
4 x 90 m, max. 70 °C (158 °F)	**5**
4 x 120 m, max. 70 °C (158 °F)	**6**
4 x 3 m, high temp. max. 200 °C (392 °F), the only option for Ex i	**7**
4 x 15 m, high temp. max. 200 °C (392 °F)	**8**

[1] Reduced Q value during calibration (Qn setting unchanged).

[2] For weld-in sensor versions according to EN 10217 (flangeless sensors 7ME3100-xxYxx-xxxx, Y = P, Q, R, S) the tube roundness shall be agreed via the PVR process (only if the factor of Du / Wxx > 100).

	Order code
Additional information	
Please add "**-Z**" to Article No. and specify Order code(s) and plain text.	
Calibration	
Production calibration DN 100 ... DN 600 (with certificate)	**Included**
Accredited Siemens ISO/IEC 17025 calibration for DN 100 to DN 200 with Qn as selected in diameter. Calibration certificate: 2 x 5 points in 5 %, 10 %, 25 %, 50 % and 100 % Qn (max. flow 630 m^3/h).	**D20**
Accredited Siemens ISO/IEC 17025 calibration for DN 200 to DN 600 with Qn as selected in diameter. Calibration certificate: 2 x 5 points in 5 %, 10 %, 25 %, 50 % and 100 % Qn (max. flow 2800 m^3/h).	**D21**
Accredited Siemens ISO/IEC 17025 calibration for DN 400 to DN 600 with Qn as selected in diameter. Calibration certificate: 2 x 5 points in 5 %, 10 %, 25 %, 50 % and 100 % Qn (max. flow 8000 m^3/h).	**D22**
Material certificate	
EN 10204-3.1	**F10**
EN 10204-3.1 and 100 % NDT on weldings, DN 100 ... DN 400	**F11**
EN 10204-3.1 and 100 % NDT on weldings, DN 500 ... DN 600	**F12**
Pressure certificate	
EN 10204-2.3	
Tag name plate	
Stainless steel TAG plate (1 x 24 x 80 mm), wire fixed. Font size depends on text length: 8 mm for 1 ... 10 characters, 4 mm for 11 ... 20 characters (specify in plain text).	**Y17**

Please use online Product selector to get latest updates:

https://www.pia-portal.automation.siemens.com

© Siemens 2021

3

Selection and ordering data (continued)

Flowmeter SONO 3100 operating instructions, accessories and spare parts

Operating instructions

Description	Article No.
SITRANS FUS060	
• English	**A5E01204521**
• German	**A5E02123845**
SITRANS F US SONO 3100	
• English	**A5E00814513**

This device is shipped with Safety Notes and a DVD containing further SITRANS F US literature.

All literature is available to download for free, in a range of languages, at http://www.siemens.com/processinstrumentation/documentation

Accessories

Description	Article No.	
Potting kit for terminal box of SONO 3200 transducers for IP68/NEMA 6P (not for Ex sensors)	**FDK:085L2403**	

Tools for transducer SONO 3200

Description	Article No.	
Extraction tool for replacement of SONO 3200 O-ring transducers under pressure and for hot-tapping (working conditions: typically water, max. 40 bar and max. 60 °C (max. 580 psi and max. 140 °F)), 50 mm (1.97") transducers	**FDK:085B5331**	

Spare parts

Transducer SONO 3200 spare parts, complete units

Type	Material	Gasket	Pressure rating	Terminal housing	Approv.	Temp. range [°C (°F)]	Length mm (inch)	Article No.	
O-ring	316 SS	O-ring	PN 40	Plastic, PA 6.6 M20		-20 … +100 (-4 … +212)	50 (1.97)	**FDK:085B5453**	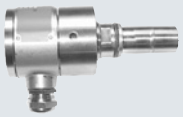
O-ring	316 SS	O-ring	PN 40	316 SS M20		-20 … +200 (-4 … +392)	50 (1.97)	**FDK:085B5450**	
O-ring	316 SS	O-ring	PN 40	316 SS M20	Ex d [1]	-20 … +180 (-4 … +356)	50 (1.97)	**FDK:085B5451**	
O-ring	316 SS	O-ring	PN 40	316 SS M20	Ex-i [2]	-10 … +190 (14 … 374)	50 (1.97)	**A5E00836448**	
O-ring	316 SS	O-ring	PN 40	Plastic, PA 6.6 ½" NPT		-20 … +100 (-4 … +212)	50 (1.97)	**A5E00839472**	
O-ring	316 SS	O-ring	PN 40	316 SS ½" NPT		-20 … +200 (-4 … +392)	50 (1.97)	**A5E00839431**	
Flange	316 SS	Graphite	PN 40	Plastic, PA 6.6 M20		-20 … +100 (-4 … +212)	88 (3.47)	**FDK:085B5461**	
Flange	316 SS	Graphite	PN 40	316 SS M20		-20 … +200 (-4 … +392)	88 (3.47)	**FDK:085B5462**	
Flange	316 SS	Graphite	PN 40	316 SS M20	Ex d [1]	-20 … +180 (-4 … +356)	88 (3.47)	**FDK:085B5463**	
Flange	316 SS	Graphite	PN 40	316 SS M20	Ex-i [2]	-10 … +190 (14 … 374)	88 (3.47)	**A5E00836465**	
Flange	316 SS	Graphite	PN 40	Plastic, PA 6.6 ½" NPT		-20 … +100 (-4 … +212)	88 (3.47)	**A5E00839479**	
Flange	316 SS	Graphite	PN 40	316 SS ½" NPT		-20 … +200 (-4 … +392)	88 (3.47)	**A5E00839440**	
Flange	316 SS	Copper ring	PN 40	316 SS PG 13.5 (cryogenic version)		-200 … +100 (-328 … +212)	88 (3.47)	**FDK:085B5416**	
Flat flange	316 SS	Flat gasket	PN 40	316 SS M20 (cryogenic version)		-200 … +100 (-328 … +212)	88 (3.47)	**A5E02593524**	

[1] ATEX (Ex) IIC 2G Ex d IIC T3- T6 Gb

[2] For systems with FUS060 ATEX IIC 2G Ex dem [ia/ib] T6/T4/T3

Terminal housing for SONO 3200 sensor

Type	Pressure rating	Material	Temp. range [°C (°F)]	Article No.	
Terminal housing (M20 cable gland)	N/A	PA 6.6	-20 … +100 (-4 … +212)	**FDK:085B5501**	
Terminal housing (M20 cable gland)	N/A	ASTM 316	-20 … +200 (-4 … +392)	**FDK:085B5504**	
Terminal housing (½" NPT cable gland)	N/A	PA 6.6	-20 … +100 (-4 … +212)	**A5E00839460**	
Terminal housing (½" NPT cable gland)	N/A	ASTM 316	-20 … +200 (-4 … +392)	**A5E00839427**	
Ex d [1] terminal housing (M20 cable gland)	N/A	ASTM 316	-20 … +180 (-4 … +356)	**FDK:085B5505**	
Ex-i [2] terminal housing (M20 cable gland)	N/A	ASTM 316	-10 … +190 (14 … 374)	**A5E00835255**	

© Siemens 2021

Selection and ordering data (continued)

SONO 3200 spare parts, transducer body without terminal housing, including insert

Type	Material	Gasket	Pressure rating	Temp. range [°C (°F)]	Length mm (inch)	Article No.	
O-ring	316 SS	O-ring	PN 40	-20 … +200 (-4 … +392)	50 (1.97)	**FDK:085B1405**	
Flange	316 SS	Graphite	PN 40	-20 … +200 (-4 … +392)	88 (3.47)	**FDK:085B1464**	

Transducer SONO 3200 gaskets

Type	Pressure rating	Material	Temperature range [°C (°F)]	Article No.	
Gasket O-ring (3 pcs. for o-ring transducers)	PN 40	FKM	-20 … +200 (-4 … +392)	**FDK:085B1089**	
Gasket flange	PN 40/160	Graphite	-20 … +200 (-4 … +392)	**FDK:085B1080**	
Gasket and 12 mm (0.47“) bolts and nuts for flange transducers (4 pcs.)	PN 40	AISI 316 or equal	-20 … +200 (-4 … +392)	**FDK:085B1083**	
Gasket and 16 mm (0.63“) bolts and nuts for flange transducers (4 pcs.)	PN 160	Graphite, 316 SS	-20 … +200 (-4 … +392)	**FDK:085B1084**	
Gasket for cryogenics transducer with flat flange (2 pcs.)	PN 40	Graphite/metal composite	-200 … +100 (-328 … +212)	**A5E02593522**	

© Siemens 2021

3

Selection and ordering data (continued)

SONO 3200 cable glands

Description	Article No.	
Black PA plastic, cable Ø 5 … 13 mm (1 pc.), temperature range -20 … 100 °C (-4 … +212 °F)	**A5E02246304**	
½" NPT gray PA plastic, cable Ø 5 … 9 mm (1 pc.), temperature range -20 ... 100 °C (-4 ... +212 °F)	**A5E02246309**	
½" NPT crome plated brass, cable Ø 5 … 9 mm (1 pc.), temperature range -40 … 100 °C (-40 … +212 °F)	**A5E02246258**	
M20 stainless steel, cable Ø 4 … 6 mm (1 pc.), temperature range -25 … 200 °C (-13 … +392 °F), Ex i approval	**A5E02246194**	
M20 Stainless steel, cable Ø 5 … 8 mm (1 pc.) temperature range -60 … 180 °C (-76 … +356 °F), Ex d approval	**A5E02246311**	

Cables for SONO 3100 with FUS060

Description	Article No.	
Coaxial cable for FUS060, (75 Ω, max. 70 °C (158 °F), black PVC), (2 pcs.)		
• 3 m (9.84ft)	**A5E00875101**	
• 15 m (49.21ft)	**A5E00861432**	
• 30 m (98.43ft)	**A5E01278662**	
• 60 m (196.85ft)	**A5E01278682**	
• 90 m (295.28ft)	**A5E01278687**	
• 120 m (393.70ft)	**A5E01278698**	
High temp. coaxial cable for FUS060; with 0.3 m brown PTFE high temp. transducer part, max 200 °C (392 °F) and black PVC for remaining transmitter part with SMB plug, max. 70 °C (158 °F); impedance 75 Ω), (2 pcs.)		
• 3 m (9.84ft)	**A5E00875105**	
• 15 m (49.21ft)	**A5E00861435**	
• 30 m (98.43ft)	**A5E01196952**	
SITRANS F US special coaxial cable sets for low temperature cryogenic systems, with SMB-plug for transmitter SITRANS FUS060, PTFE material, temp. -200 … +200 °C (-328 … .+392 °F), impedance 75 Ω, (2 pcs.)		
• 10 m (32.84ft)	**A5E02085593**	
• 15 m (49.21ft)	**A5E03262088**	
• 30 m (98.43ft)	**A5E02085644**	
• 40 m (131.23ft)	**A5E02085649**	

© Siemens 2021

Dimensional drawings

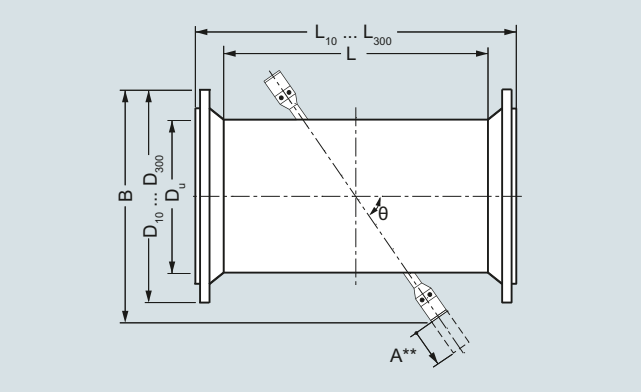

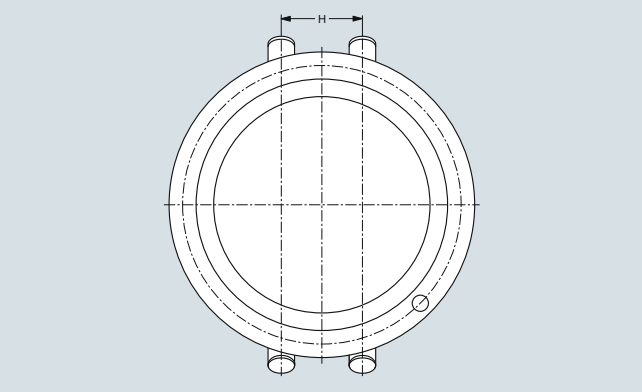

Sensor SONO 3100 with EN norm

DN	D_U	L [1) 4)]	B[5)]	θ	H	PN10 W_{min} [2)]	PN10 D_{10}	PN10 L_{10} [1)]	PN16 W_{min} [2)]	PN16 D_{16}	PN16 L_{16} [1)]	PN25 W_{min} [2)]	PN25 D_{25}	PN25 L_{25} [1)]	PN40 W_{min} [2)]	PN40 D_{40}	PN40 L_{40} [1)]
	[mm]	[mm]	[mm]	[°]	[mm]	[mm]	[mm]	[mm]	[mm]	[mm]	[mm]	[mm]	[mm]	[mm]	[mm]	[mm]	[mm]
100	114.3	860	305	45 [3)]	42.8	-	-	-	3.6	220	960	-	-	-	3.6	235	990
125	139.7	862	325	45 [3)]	64.5	-	-	-	4.0	250	970	-	-	-	4.0	270	990
150	168.3	862	350	45 [3)]	78.1	-	-	-	4.5	285	970	-	-	-	4.5	300	1010
200	219.1	668	430	45 [3)]	102.1	6.3	340	790	6.3	340	790	6.3	360	820	6.3	375	840
250	273.0	714	480	45 [3)]	127.6	6.3	395	850	6.3	405	850	7.1	425	890	7.1	450	920
300	323.9	607	525	45 [3)]	151.8	7.1	445	740	7.1	460	760	8.0	485	790	8.0	515	830
350	355.6	639	550	45 [3)]	166.4	8.0	505	770	8.0	520	800	8.0	555	840	8.8	580	880
400	406.4	703	600	45 [3)]	191.3	8.0	565	850	8.0	580	875	8.8	620	925	11.1	660	975
500	508.0	797	690	45 [3)]	241.1	7.1	670	950	8.0	715	980	10.0	730	1050	14.2	755	1080
600	610.0	912	830	60	294.8	7.1	780	1075	8.8	840	1105	11.0	845	1165	-	-	-

1) Length tolerance (mm): DN 100 +2/-3, DN 125 … 200 +3/-4, DN 250 … 400 +4/-5, DN 500 … 600 +5/-6

2) Wall thickness for pressure rates PN 6 … 40. For weld-in sensor versions according EN10217 (flangeless sensors 7ME3100-xxYxx-xxxx, Y=P, Q, R, S) the tube roundness shall be agreed via the PVR process (only if the factor of Du/Wxx > 100). W_{min} wall thickness are min. values. The delivered sensor can have larger wall thicknesses to meet the selected pressure rate. Any specific required wall thickness must be ordered as PVR.

3) For all sensors with flange transducers path angle are 60°.

4) L is the length of sensor versions without flanges (weld-in version). For weld-in sensor versions according to EN 10217 (flangeless sensors 7ME3100-xxYxx-xxxx, Y = P, Q, R, S) the tube roundness shall be agreed via the PVR process (only if the factor of Du/Wxx > 100).

5) B dimension value is an approximate information and may differ a little by flange pressure rate.

A**) Space required for replacement of transducer min. 230 mm (9.1 inch).

SONO 3100, 2-path

Nominal diam.	Flange type - Weight [kg (lbs)]			
DN	PN 10	PN 16	PN 25	PN 40
100 (4”)	-	32 (70.5)	-	35 (77.2)
125 (5”)	-	38 (83.8)	-	44 (97.0)
150 (6”)	-	45 (99.2)	-	52 (114.6)
200 (8”)	59 (130.0)	58 (127.9)	70 (154.3)	79 (174.2)
250 (10”)	73 (161.0)	75 (163.3)	96 (211.6)	117 (257.9)
300 (12”)	83 (183.0)	92 (202.8)	114 (251.3)	151 (332.9)
350 (14”)	98 (216.0)	113 (249.1)	145 (332.9)	191 (421.1)
400 (16”)	119 (262.4)	141 (310.9)	191 (421.1)	275 (606.3)
500 (20”)	153 (337.3)	207 (456.4)	284 (626.0)	379 (836.0)
600 (24”)	193 (425.5)	276 (608.5)	363 (800.3)	-

Weight of system incl. process flanges and standard O-ring transducers. For sensors with flange transducer please add approx. 10 kg (22.05 lbs). For SS terminal housings instead of the standard PA housing add approx. 5 kg (11.03 lbs).

© Siemens 2021

Dimensional drawings (continued)

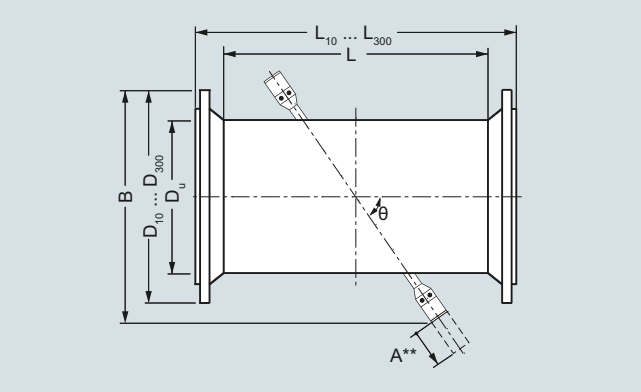

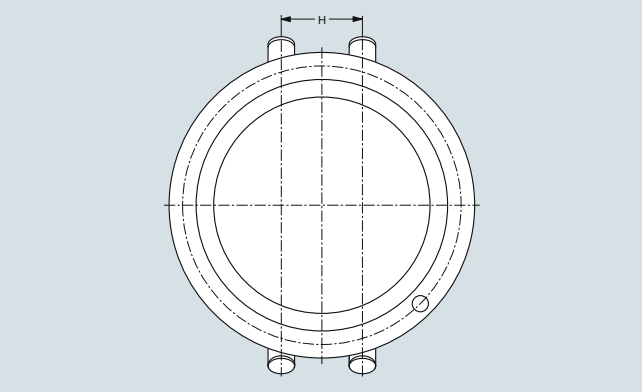

Sensor SONO 3100 with ANSI norm

						Class 150			Class 300		
Size (DN)	**D_U**	**L [1) 4)]**	**B [5)]**	**θ**	**H**	**W_{min} [2)]**	**D_{150}**	**L_{150} [1)]**	**W_{min} [2)]**	**D_{300}**	**L_{300} [1)]**
inch (mm)	[inch]	[inch]	[inch]	[°]	[inch]	[inch]	[inch]	[inch]	[inch]	[inch]	[inch]
4" (100)	4.50	33.86	12.01	45 [3)]	1.69	0.14	9.00	39.86	0.25	10.00	40.62
5" (125)	5.50	33.94	12.80	45 [3)]	2.54	0.15	10.00	40.94	0.27	11.00	41.70
6" (150)	6.63	33.94	13.78	45 [3)]	3.07	0.16	11.00	40.94	0.30	12.50	41.70
8" (200)	8.63	26.30	16.93	45 [3)]	4.02	0.16	13.50	34.30	0.29	15.00	35.06
10" (250)	10.75	28.11	18.90	45 [3)]	5.02	0.18	16.00	36.11	0.34	17.50	37.35
12" (300)	12.75	23.90	20.67	45 [3)]	5.98	0.20	19.00	32.90	0.39	20.50	34.14
14" (350)	14.00	25.16	21.65	45 [3)]	6.55	0.21	21.00	35.16	-	-	-
16" (400)	16.00	27.68	23.62	45 [3)]	7.53	0.22	23.50	33.74	-	-	-
20" (500)	20.00	31.38	27.17	45 [3)]	9.49	0.26	27.50	42.76	-	-	-
24" (600)	24.00	35.91	32.68	60	11.61	0.30	32.00	47.91	-	-	-

1) Length tolerance (mm): 4" +0.08"/-0.12" (+2/-3 mm), 5" … 8" +0.12"/-0.16" (+3/-4mm), 10" … 16" +0.16"/-0.20" (+4/-5 mm), 20" … 24" +0.20"/-0.24" (+5/-6 mm)

2) Minimum wall thickness for pressure rates Class 150 or Class 300. For weld-in sensor versions according to EN 10217 (flangeless sensors 7ME3100-xxYxx-xxxx, Y = P, Q, R, S) the tube roundness shall be agreed via the PVR process (only if the factor of Du/Wxx > 100). W_{min} wall thickness are min. values. The delivered sensor can have larger wall thicknesses to meet the selected pressure rate. Any specific required wall thickness to be ordered as PVR.

3) For all sensors with flange transducers path angle are 60°.

4) L is the length of sensor versions without flanges (weld-in version). For weld-in sensor versions according to EN 10217 (flangeless sensors 7ME3100-xxYxx-xxxx, Y = P, Q, R, S) the tube roundness shall be agreed via the PVR process (only if the factor of Du/Wxx > 100).

5) B dimension value is an approximate information and may differ a little by flange pressure rate.

A**) Space required for replacement of transducer min. 230 mm (9.1 inch).

Approximate weights for SONO 3100 sensor with ANSI B16.5 flanges

Nominal size		**Weight [1)] [kg (lbs)]**			
DN	**DN**	**Class 150**		**Class 300**	
[inch]	[mm]	[kg]	[lbs]	[kg]	[lbs]
4“	100	32	70.5	35	77.2
5“	125	38	83.8	44	97.0
6“	150	45	99.2	52	114.6
8“	200	58	127.9	79	174.2
10“	250	75	165.3	117	257.9
12“	300	92	202.8	151	332.9
14“	350	113	249.1	-	-
16“	400	141	310.9	-	-
20“	500	207	456.4	-	-
24“	600	276	608.5	-	-

1) Weight of system incl. process flanges and standard O-ring transducers. For sensors with flange transducer please add approx. 10 kg (22.05 lbs). For SS terminal housings instead of the standard PA housing add approx. 5 kg (11.03 lb).

© Siemens 2021

Circuit diagrams

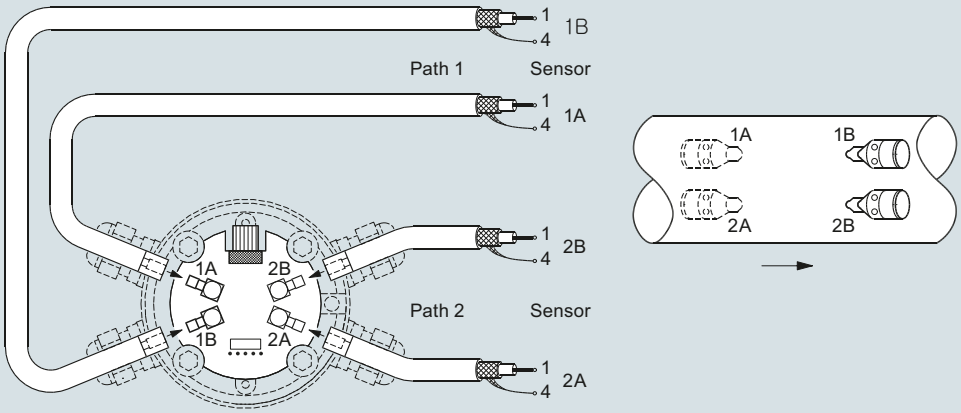

Electrical connection of SITRANS FUS060 and SONO 3100

© Siemens 2021

SONOKIT flowmeter (with FUS060 or FUS080)

Overview



SONOKIT is a transit time based ultrasonic flowmeter for retrofitting on existing pipelines.

The kit offers all necessary parts and special tools to make the installation as 1-path or 2-path flowmeter.

The set is made for installation on empty pipes or pipes under pressure without process shut-down (hot-tap).

Please contact Siemens for further information on hot-tap tools and instructions.

SONOKIT has inline transducers (in contact with media) which assure superior accuracy and performance.

Benefits

- Cost-effective solution – contains all the necessary components for retrofitting
- SONOKIT is easy to install in pipeline sizes DN 200 to DN 3000 (8" to 120") 1-path DN 100 to DN 2400 (4" to 96").
- No bypass installation necessary – withstands pressures up to 40 bar (580 psi) and media temperatures between -20 °C and +200 °C (-4 °F and +392 °F)
- High accuracy – the bigger the pipe, the more accurate the result
- Solid construction and no moving parts for a 100 % maintenance and obstruction-free flowmeter
- The SONOKIT comes with transducers in IP68 enclosure.
- Available in a robust version that can be buried and withstands constant flooding.
- Inline transducers assure superior accuracy and performance.
- Automatic calculation of the calibration factor when pipe geometry data are entered in the transmitter.
- FST030 transmitter, modified for inline HART or Modbus
- FUS080 transmitter, battery or mains-powered

Application

- Raw water intake for water treatment plants
- Water distribution systems
- Irrigation systems
- Power generation (energy and water)
- District heating plants
- Cooling water plants within the industry and in power stations
- Systems within the oil and refinery business
- Sewage treatment plants
- Plants transporting non-conductive liquids

Design

The SONOKIT package box contains all necessary parts to build an ultrasonic flowmeter on existing pipes depending on choices at ordering:

- Papers to wrap around pipes for alignment of sensors
- Transducer alignment tools
- Mounting plates, transducer holders and SONO 3200 transducers
- Transducer cables
- SITRANS FUS060 or FUS080 transmitter for wall mounting
- For pipes bigger DN500 (20") please order FST030 transmitter separately (FDK-085X6329)

Technical specifications

The transmitter related to this system is the SITRANS FUS080 or FST030.

Technical specifications on pages 3/260 and 3/331.

Accuracy	
Typical, depending on accuracy of measurements of installation	• 2-path: ≤ ± (0.5 … 1.5 %) • 1-path: ≤ ± (1 … 3 %)

Note:
Accuracy depends on the accuracy of the measurements taken at location. This means that inaccurate measurements of angles, distance between transducers, wall thickness and pipe diameter have a direct effect on the accuracy. Values measured are entered into the memory of the FUS060 or FUS080 transmitter.

Requirements for pipes

Size	FUS060: DN 100 … DN 3000 (4" … 120") FUS080: DN 100 … DN 1200 (4" … 48")
Line pressure	max. 40 bar (580 psi)
Media temperature	
• Standard version	-10 … +200 °C (14 … 392 °F)
• ATEX Ex d version (FUS060)	-20 … +180 °C (-4 … +356 °F)
• ATEX Ex i version (FUS060)	-10 … +190 °C (14 … 374 °F)
Ambient temperature sensor	
• Standard and Ex-i version	-20 … +60 °C (-4 … +140 °F)
• Ex d version	-20 … +180 °C (-4 … +356 °F)
Transducer enclosure/ approvals/certificates	
Standard version	IP67 (NEMA 6)/IP68 (NEMA 6P)
Ex approval	System ATEX approval for SONO 3200 Ex i transducers together with transmitter FUS060-Ex: ATEX II 2 G Ex dem [ia/lb] IIC T6/T4/T3 Gb or ATEX II 2G Ex d T3-T6 Gb with SONO 3200 Ex d transducers (for standard FUS060 transmitter, installed outside of Ex zone)
Material certificates	EN 10204-3.1 material certificate on transducer mounting parts
Transducer materials	
Terminal housing	Standard version: PA 6.6, 100 °C (212 °F) or stainless steel AISI 316, 200 °C (392 °F)
Transducer body	Standard version: Stainless steel AISI 316, 200 °C (392 °F)

© Siemens 2021

Technical specifications (continued)

Materials of existing pipeline	
Steel	Transducer holder: EN 10273 or EN 10216 (P235GH)
	Mounting plates [1]: EN 10273 or EN 10216 (P235GH)
Concrete	Transducer holder: Stainless steel AISI 316 or similar
	Mounting plates [1]: (not included)
Stainless steel	Transducer holder: Stainless steel AISI 316 or similar
	Mounting plates [1]: Stainless steel AISI 316 or similar
Pipe wall thickness	
Steel pipe (AISI 316 and St. 37.2 or corresponding material)	Transducer and holder available in length L = 160, allowing a pipe wall thickness up to 20 mm (0.79")
Concrete pipe	Transducer and holder available in length L = 230, allowing a pipe wall thickness up to 200 mm (7.9") and pipe sizes ≥ DN 600.

Dimension of the package box (L x W x H)	856 x 390 x 344 mm (33.7" x 15.4" x 13.5")
Weight example of a package (standard 2-path with FUS060)	approx. 53 kg (116.8 lb)
Certificates and approvals	
Conformity certificate	The devices are supplied as standard with a Siemens Certificate of Conformity on a DVD.
Material certificate	Material certificate for the transducer parts according to EN 10204-3.1 is optionally available.
Approvals	No custody transfer approvals

Information on PED approval:
The SONOKIT includes the pipe mounting parts only and therefore it cannot be PED-approved. After the installation, all installation-related activities (welding, pressure test etc.) are the responsibility of the customer.

[1] Mounting plates are only included for empty pipe installation types (refer to selection "A"). For hot tap mounting the mounting plates are not included (refer to selection "B").

Installation requirements

The space requirements (in mm) around the pipe for retrofitting a SITRANS F US ultrasonic flowmeter type SONOKIT are given below:

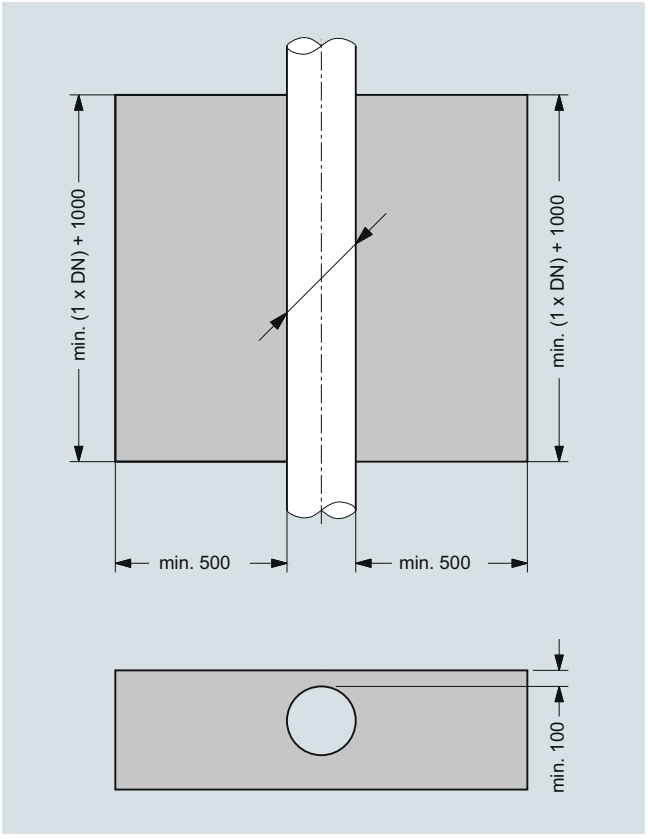

Empty pipe installation

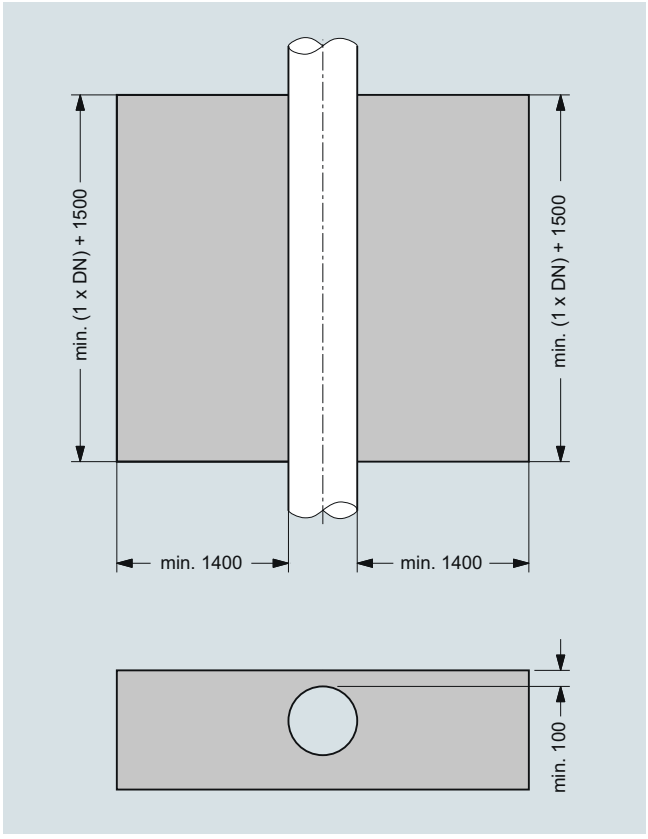

Hot-tap installation

© Siemens 2021

SONOKIT flowmeter (with FUS060 or FUS080)

Selection and ordering data

Article No. **7ME3210-** - Ord. Code

SITRANS F US SONOKIT 1-path sensor ↗

↗ Click on the Article No. for the online configuration in the PIA Life Cycle Portal.

Diameter	Qn setting [m^3/h]	
DN 100 (4")	100	1 P
DN 125 (5")	150	1 T
DN 150 (6")	220	2 B
DN 200 (8")	380	2 F
DN 250 (10")	600	2 K
DN 300 (12")	850	2 P
DN 350 (14")	1000	2 T
DN 400 (16")	1300	3 B
DN 450 (18")	1700	3 F
DN 500 (20")	2200	3 K
DN 550 (22")	2600	3 P
DN 600 (24")	3200	3 T
DN 650 (26")	3600	4 B
DN 700 (28")	4200	4 F
DN 750 (30")	4800	4 K
DN 800 (32")	5500	4 P
DN 900 (36")	7500	5 B
DN 1000 (40")	9000	5 K
DN 1100 (44")	10000	5 P
DN 1200 (48")	13200	5 T

Installation method[1]	
Empty pipe (incl. transducer holder and mounting plates). Alignment rods and tools must be ordered as accessories.	A
Hot tap, mounting under pressure (mounting plates **not** incl.). Special mounting tools to be ordered separately.	B
Transducer holder	
Carbon steel, length = 160 mm, mounting plates in carbon steel	1
Stainless steel, length = 160 mm, mounting plates in stainless steel	2
Stainless steel, length = 230 mm, for concrete pipe (DN 600 ... 2400)	3
Transducer type and approval	
IP67 (NEMA 4X/6) PA housing, PN 40, O-ring, 100 °C (212 °F), no approval	1
IP68 SS housing, PN 40, O-ring, 180 °C (356 °F), Ex d, ATEX approval (only with standard FUS060)	2
IP68 PA housing, Sylgard potting kit, PN 40, O-ring, 100 °C (212 °F), no approval	3
IP68 SS housing, Sylgard potting kit, PN 40, O-ring, 200 °C (392 °F), no approval	4
IP67 SS housing, PN 40, O-ring, 190 °C (374 °F), Ex i type, ATEX approval (only with FUS060 Ex)	5

Article No. **7ME3210-** - Ord. Code

SITRANS F US SONOKIT 1-path sensor

Cable gland entries	
Cable glands M20 in transducers and in transmitter M25/20/16 x 1.5 (FUS080 only M20)	1
Cable glands ½" NPT in transducers and in transmitter (only with FUS060)	2
Transmitter version of SITRANS FUS060	
(only DN 100 ... 2400)	
IP65 (NEMA 4), 120/230 V AC	N
IP65 (NEMA 4), 24 V AC/DC	P
IP65 (NEMA 4), 24 V AC/DC, Ex-version	Q
Transmitter version of SITRANS FUS080	
(only DN 100 ... 1200)	
PDM software tool and IrDA-adapter, which are needed for settings update, to be ordered separately, see FUS080 accessories	
IP67/NEMA 4X/6 115 ... 230 V AC	U
IP67/NEMA 4X/6 3.6 V battery version, incl. dual battery pack	V
IP67/NEMA 4X/6 115 ... 230 V AC, incl. 3.6 V single battery backup	W
IP67/NEMA 4X/6 3.6 V battery version (no battery pack included)[2]	X
Transmitter output module	
Transmitter SITRANS FUS080	
Pulse and/or alarm output (standard for FUS080)	A
Transmitter SITRANS FUS060	
HART, 1 pulse output, 1 relay	B
HART Ex version, 1 pulse output, 1 relay	C
PROFIBUS PA, 1 pulse/frequency	D
Transducer coaxial cables (with FUS080 only, 15 and 30 m, 70°C (158 °F) cable types)	
2 x 3 m, max. 70 °C (158 °F), the only option for Ex i	0
2 x 15 m, max. 70 °C (158 °F)	1
2 x 30 m, high temp. max. 200 °C (392 °F)	2
2 x 30 m, max. 70 °C (158 °F)	3
2 x 60 m, max. 70 °C (158 °F)	4
2 x 90 m, max. 70 °C (158 °F)	5
2 x 120 m, max. 70 °C (158 °F)	6
2 x 3 m, high temp. max. 200 °C (392 °F), the only option for Ex i	7
2 x 15 m, high temp. max. 200 °C (392 °F)	8
Special version (add Order code):	
No transducer cable, cable length 2 x 3 m, the only option for Ex i	9 R 0 A
No transducer cable, cable length 2 x 15 m	9 R 0 B
No transducer cable, cable length 2 x 30 m	9 R 0 C
No transducer cable, cable length 2 x 60 m	9 R 0 D
No transducer cable, cable length 2 x 90 m	9 R 0 E
No transducer cable, cable length 2 x 120 m	9 R 0 F

[1] Mounting tools must be ordered separately as "-Z"-options.

[2] Lithium batteries are subject to special transportation regulations according to United Nations "Regulation of Dangerous Goods, UN 3090 and UN 3091". Special transport documentation is required to observe these regulations. This may influence both transport time and costs."

© Siemens 2021

Selection and ordering data

	Article No.
Additional information	
Please add "**-Z**" to Article No. and specify Order code(s) and plain text.	
Material certificate	
EN 10204-3.1, transducer body material	**F30**
EN 10204-3.1, transducer body material	**F31**
EN 10204-3.1, mounting plate material	**F32**
Regional specific approval	
KCC marking for Korea	**W28**
Tag name plate	
Stainless steel TAG plate (1 x 24 x 80 mm), wire fixed. Font size depends on text length: 8 mm for 1 ... 10 characters, 4 mm for 11 ... 20 characters (specify in plain text).	**Y17**
Accessories	
Alignment rods-set for DN 100 ... 650 (4" ... 26") Ø = 25 mm, L = 500 mm, 3 pcs.	**S10**
Alignment rods-set for DN 700 ... 1900 (28" ... 76") Ø = 25 mm, L = 500 mm, 6 pcs.	**S11**
Alignment rods-set for DN 2000 ... 2400 (80" ... 96") Ø = 25 mm, L = 500 mm, 8 pcs.	**S12**
Spanner key for tranducer mounting type SONO 3200 O-ring type	**T11**
Tool set with various mounting/spare parts for SONOKIT installation	**T12**

Operating instructions

Description	Article No.
SITRANS FUS060	
• English	**A5E01204521**
• German	**A5E02123845**
SITRANS FUS080	
• English	**A5E03059912**
• German	**A5E31628428**
SITRANS F US SONOKIT 1-path	
• English	**A5E00814557**
• German	**A5E02610428**

All literature is available to download for free, in a range of languages, at
https://www.siemens.com/processinstrumentation/documentation

Please use online Product selector to get latest updates:

www.pia-portal.automation.siemens.com

SITRANS F US SONOKIT 2-path sensor ↗ **7ME3220-** Ord. Code

↗ Click on the Article No. for the online configuration in the PIA Life Cycle Portal.

Diameter	Qn setting [m^3/h]	
DN 200 (8")	380	**2 F**
DN 250 (10")	600	**2 K**
DN 300 (12")	850	**2 P**
DN 350 (14")	1000	**2 T**
DN 400 (16")	1300	**3 B**
DN 450 (18")	1700	**3 F**
DN 500 (20")	2200	**3 K**
DN 550 (22")	2600	**3 P**
DN 600 (24")	3200	**3 T**
DN 650 (26")	3600	**4 B**
DN 700 (28")	4200	**4 F**
DN 750 (30")	4800	**4 K**
DN 800 (32")	5500	**4 P**
DN 900 (36")	7500	**5 B**
DN 1000 (40")	9000	**5 K**
DN 1100 (44")	10000	**5 P**
DN 1200 (48")	13200	**5 T**
Installation method[1)]		
Empty pipe (incl. transducer holder and mounting plates). Alignment rods and tools must be ordered as accessories.		**A**
Hot tap, mounting under pressure (mounting plates **not** incl.). Special mounting tools to be ordered separately.		**B**
Transducer holder		
Carbon steel, length = 160 mm, mounting plates in carbon steel		**1**
Stainless steel, length = 160 mm, mounting plates in stainless steel		**2**
Stainless steel, length = 230 mm, for concrete pipe (DN 600 ... 3000)		**3**

© Siemens 2021

SONOKIT flowmeter (with FUS060 or FUS080)

Selection and ordering data

SITRANS F US SONOKIT 2-path sensor	7ME3220-										Ord. Code		
Transducer type and approval													
IP67 (NEMA 4X/6) PA housing, PN 40, O-ring, 100 °C (212 °F), no approval			**1**										
IP68 SS housing, PN 40, O-ring, 180 °C (356 °F), Ex d, ATEX approval (only with standard FUS060)			**2**										
IP68 PA housing, Sylgard potting kit, PN 40, O-ring, 100 °C (212 °F), no approval			**3**										
IP68 SS housing, Sylgard potting kit, PN 40, O-ring, 200 °C (392 °F), no approval			**4**										
IP67 SS housing, PN 40, O-ring, 190 °C (374 °F), Ex i type, ATEX approval (only with FUS060 Ex)			**5**										
Cable gland entries													
Cable glands M20 in transducers and in transmitter M25/20/16 x 1.5 (FUS080 only M20)				**1**									
Cable glands ½" NPT in transducers and in transmitter (only with FUS060)				**2**									
Transmitter version of SITRANS FUS060 (only DN 200 ... 500)													
IP65 (NEMA 4), 120/230 V AC					**N**								
IP65 (NEMA 4), 24 V AC/DC					**P**								
IP65 (NEMA 4), 24 V AC/DC, Ex-version					**Q**								
Transmitter version of SITRANS FUS080													
(only DN 200 ... 1200)													
PDM software tool and IrDA-adapter, which are needed for settings update, to be ordered separately, see FUS080 accessories													
IP67/NEMA 4X/6 115 ... 230 V AC					**U**								
IP67/NEMA 4X/6 3.6 V battery version, incl. dual battery pack					**V**								
IP67/NEMA 4X/6 115 ... 230 V AC, incl. 3.6 V single battery backup					**W**								
IP67/NEMA 4X/6 3.6 V battery version (no battery pack included)[2]					**X**								
Transmitter output module													
Transmitter SITRANS FUS080													
Pulse and/or alarm output (standard for FUS080)							**A**						
Transmitter SITRANS FUS060													
HART, 1 pulse output, 1 relay							**B**						
HART Ex version, 1 pulse output, 1 relay							**C**						
PROFIBUS PA, 1 pulse/frequency							**D**						

SITRANS F US SONOKIT 2-path sensor	7ME3220-										Ord. Code		
Transducer coaxial cables (with FUS080 only, 15 and 30 m, 70°C (158 °F) cable types)													
4 x 3 m, max. 70 °C (158 °F), the only option for Ex i										**0**			
4 x 15 m, max. 70 °C (158 °F)										**1**			
4 x 30 m, high temp. max. 200 °C (392 °F)										**2**			
4 x 30 m, max. 70 °C (158 °F)										**3**			
4 x 60 m, max. 70 °C (158 °F) (up to DN 3000)										**4**			
4 x 90 m, max. 70 °C (158 °F) (up to DN 3000)										**5**			
4 x 120 m, max. 70 °C (158 °F) (up to DN 3000)										**6**			
4 x 3 m, high temp. max. 200 °C (392 °F), the only option for Ex i										**7**			
4 x 15 m, high temp. max. 200 °C (392 °F)										**8**			
Special version (add Order code):													
No transducer cable, cable length 4 x 3 m, the only option for Ex i										**9**	**R**	**0**	**A**
No transducer cable, cable length 4 x 15 m										**9**	**R**	**0**	**B**
No transducer cable, cable length 4 x 30 m										**9**	**R**	**0**	**C**
No transducer cable, cable length 4 x 60 m (up to DN 3000)										**9**	**R**	**0**	**D**
No transducer cable, cable length 4 x 90 m (up to DN 3000)										**9**	**R**	**0**	**E**
No transducer cable, cable length 4 x 120 m (up to DN 3000)										**9**	**R**	**0**	**F**

[1] Mounting tools must be ordered separately as "-Z"-options.

[2] Lithium batteries are subject to special transportation regulations according to United Nations "Regulation of Dangerous Goods, UN 3090 and UN 3091". Special transport documentation is required to observe these regulations. This may influence both transport time and costs."

Additional information	Order code
Please add "**-Z**" to Article No. and specify Order code(s) and plain text.	
Material certificate	
EN 10204-3.1, transducer body material	**F30**
EN 10204-3.1, transducer body material	**F31**
EN 10204-3.1, mounting plate material	**F32**
Regional specific approval	
KCC marking for Korea	**W28**
Tag name plate	
Stainless steel TAG plate (1 x 24 x 80 mm), wire fixed. Font size depends on text length: 8 mm for 1 ... 10 characters, 4 mm for 11 ... 20 characters (specify in plain text).	**Y17**
Accessories	
Alignment rods-set for DN 100 ... 750 (4" ... 30") Ø = 25 mm, L = 500 mm, 3 pcs.	**S10**
Alignment rods-set for DN 800 ... 2100 (32" ... 84") Ø = 25 mm, L = 500 mm, 6 pcs.	**S11**
Alignment rods-set for DN 2200 ... 3000 (88" ... 120") Ø = 25 mm, L = 500 mm, 8 pcs.	**S12**
Spanner key for tranducer mounting type SONO 3200 O-ring type	**T11**
Tool set with various mounting/spare parts for SONOKIT installation	**T12**

© Siemens 2021

Selection and ordering data (continued)

Operating instructions

Description	Article No.
SITRANS FUS060	
• English	**A5E01204521**
• German	**A5E02123845**
SITRANS FUS080	
• English	**A5E03059912**
• German	**A5E31628428**
SITRANS F US SONOKIT 2-path	
• English	**A5E02445496**
• German	**A5E02554972**

All literature is available to download for free, in a range of languages, at
https://www.siemens.com/processinstrumentation/documentation

Please use online Product selector to get latest updates:

https://www.pia-portal.automation.siemens.com

Flowmeter SONOKIT accessories and spare parts

Accessories

Potting kit for SONO 3200 terminal housing

Description	Article No.	
Potting kit for terminal box of SONO 3200 transducers for IP68/NEMA 6P (not for Ex sensors)	**FDK:085L2403**	

Tools for SONO 3200 transducers and SONOKIT

Description	Article No.	
Extraction tool for replacement of SONO 3200 O-ring transducers under pressure and for hot-tapping (working conditions: typically water, max. 40 bar and max. 60 °C (max. 580 psi and max. 140 °F))		
For transducer length:		
• Up to 160 mm (6.3“)	**FDK:085B5333**	
• Up to 230 mm (9.1“)	**FDK:085B5335**	
Angle measurement tool for SONOKIT	**FDK:085B5330**	
Hot-tap drilling tool for SONOKIT, the extraction tool is required, max. pressure 40 bar (580 psi)	**FDK:085B5392**	
Alignment tool for SONOKIT (typically for hot-tapping) For use on pipe sizes in the range DN 300 … DN 1200	**FDK:085B5393**	

Description	Article No.	
Alignment rods-set for DN 100 … 650 (4" … 26"), Ø = 25 mm, L = 500 mm, 3 pcs.	**A5E02609214**	
Alignment rods-set for DN 700 … 1900 (28" … 76"), Ø = 25 mm, L = 500 mm, 6 pcs.	**A5E02609215**	
Alignment rods-set for DN 2000 … 3000 (80" … 120"), Ø = 25 mm, L = 500 mm, 10 pcs.	**A5E02609216**	
Spanner key for tranducer mounting type SONO 3200 O-ring type	**A5E02609218**	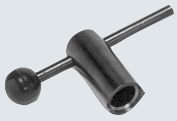
Tool set with various mounting/spare parts for SONOKIT installation	**A5E02609219**	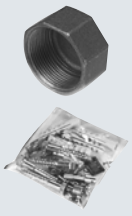

© Siemens 2021

3

Selection and ordering data (continued)

Spare parts

Tranducer SONO 3200 spare parts, complete transducer with ½"-NPT cable glands

Transducer type	Material	Gasket	Pressure rating	Terminal housing	Approval	Temperature range [°C (°F)]	Length [mm (inch)]	Article No.
O-ring	316 SS	O-ring	PN 40	Plastic PA 6.6		-20 … +100 (-420 … +212)	160 (6.3)	**A5E00839476**
O-ring	316 SS	O-ring	PN 40	316 SS		-20 … +200 [1] (-4 … +392)	160 (6.3)	**A5E00839435**
O-ring	316 SS	O-ring	PN 40	Plastic PA 6.6		-20 … +100 (-4 … +212)	230 (9.41)	**A5E00839477**
O-ring	316 SS	O-ring	PN 40	316 SS		-20 … +200 [1] (-4 … +392)	230 (9.41)	**A5E00839437**



[1] [1] 316 SS housing for -20 … +200 °C (-4 … +392 °F) media temp. but cable glands only for -20 … +100 °C (-4 … +212 °F) ambient temp.

Transducer SONO 3200 spare parts, complete transducer with M20 cable glands

Transducer type	Material	Gasket	Pressure rating	Terminal housing	Approval	Temperature range [°C (°F)]	Length [mm (inch)]	Article No.
O-ring	316 SS	O-ring	PN 40	Plastic PA 6.6		-20 … +100 (-4 … +212)	160 (6.3)	**FDK:085B5454**
O-ring	316 SS	O-ring	PN 40	316 SS		-20 … +200 [1] (-4 … +392)	160 (6.3)	**FDK:085B5455**
O-ring	316 SS	O-ring	PN 40	Plastic PA 6.6		-20 … +100 (-4 … +212)	230 (9.41)	**FDK:085B5458**
O-ring	316 SS	O-ring	PN 40	316 SS	Ex d [2]	-20 … +180 (-4 … +356)	160 (6.3)	**FDK:085B5452**
O-ring	316 SS	O-ring	PN 40	316 SS	Ex I [3]	-10 … +190 (14 … 374)	160 (6.3)	**A5E00836462**
O-ring	316 SS	O-ring	PN 40	316 SS		-20 … +200 [2] (-4 … +392)	230 (9.41)	**FDK:085B5459**

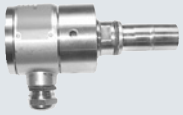

[1] 316 SS housing for -20 … +200 °C (-4 … +392 °F) media temp. but cable glands only for -20 … +100 °C (-4 … +212 °F) ambient temp.

[2] ATEX (Ex) IIC 2G Ex d IIC T3-T6 Gb

[3] For systems with FUS060 ATEX IIC 2G Ex dem [ia/ib] T6/T4/T3

Transducer SONO 3200 spare parts, transducer terminal housing with M20 cable glands

Type	Article No.
Material: PA 6.6, Temperature range: -20 … +100 °C (-4 … +212 °F)	**FDK:085B5501**
Material: AISI 316, Temperature range: -20 … +200 °C (-4 … +392 °F)	**FDK:085B5504**
Material: AISI 316, Ex d [1], Temperature range: -20 … +180 °C (-4 … +356 °F)	**FDK:085B5505**
Material: AISI 316, Ex i [2], Temperature range: -10 … +190 °C (14 … 374 °F)	**A5E00835255**



[1] ATEX (Ex) IIC 2G Ex d IIC T3-T6 Gb

[2] For systems with FUS060 ATEX IIC 2G Ex dem [ia/ib] T6/T4/T3

Transducer SONO 3200 spare parts, transducer terminal housing with ½"-NPT cable glands

Type	Article No.
Material: PA 6.6, Temperature range: -20 … +100 °C (-4 … +212 °F)	**A5E00839460**
Material: AISI 316, Temperature range: -20 … +200 °C (-4 … +392 °F)	**A5E00839427**



© Siemens 2021

Selection and ordering data (continued)

Transducer SONO 3200 spare parts transducer body with insert as well as insert only

Temperature range [°C (°F)]	Gasket	Length [mm (inch)]	Article No.
-20 … +200 (-4 … +392)	O-ring (FFKM O-ring material) [1]	160 (6.3)	**FDK:085B1406**
-20 … +200 (-4 … +392)	O-ring (FKM 602 O-ring material) [2]	160 (6.3)	**FDK:085B5510**
-20 … +200 (-4 … +392)	O-ring	230 (9.41)	**FDK:085B5511**



[1] Chemical resistant O-ring material. Body specially for Ex-approved transducers.

[2] Body specially for standard transducers.

Transducer SONO 3200 gasket

Type	Pressure rating	Material	Temperature range [°C (°F)]	Article No.
Gasket O-ring (3 pcs. for O-ring transducers)	PN 40	FKM	-20 … +200 (-4 … +392)	**FDK:085B1089**



Cables for SONOKIT SONO 3200 transducers with FUS060

Description	Article No.
Coax cable for FUS060, (75 Ω, max. 70 °C (158 °F), black PVC), (2 pcs.)	
• 3 m (9.84 ft)	**A5E00875101**
• 15 m (49.21 ft)	**A5E00861432**
• 30 m (98.43 ft)	**A5E01278662**
• 60 m (196.85 ft)	**A5E01278682**
• 90 m (295.28 ft)	**A5E01278687**
• 120 m (393.70 ft)	**A5E01278698**
High temp. coaxial cable for FUS060; with 0.3 m brown PTFE high temp. transducer part, max. 200 °C (392 °F) and black PVC transmitter part with SMB plug, max. 70 °C (158 °F); (impedance 75 Ω), (2 pcs.)	
• 3 (9.84)	**A5E00875105**
• 15 (49.21)	**A5E00861435**
• 30 (98.43)	**A5E01196952**



Cables for SONOKIT SONO 3200 transducers with FUS080

Description	Article No.
Coax cable for FUS060, (75 Ω, max. 70 C (158 °F), black PVC), (2 pcs.)	
• 15 m (49.21 ft)	**A5E02478541**
• 30 m (98.43 ft)	**A5E02478551**



Transducer holder for SONOKIT SONO 3200 transducers

Description	Article No.
1-path (each incl. 1 pc.)	
• 160 mm (6.3“) stainless steel 45°, DN 100 … DN 150 (4“ … 6“)	**FDK:085L1103**
• 160 mm (6.3“) carbon steel 45°, DN 100 … DN 150 (4“ … 6“)	**FDK:085L1102**
• 230 mm (9.1“) for concrete pipe 60°, DN 600 … DN 2400 (24“ … 96“)	**FDK:085L1107**
• 160 mm (6.3“) stainless steel 60°, DN 200 … DN 2400 (8“ … 96“)	**FDK:085L1105**
• 160 mm (6.3“) carbon steel 60°, DN 200 … DN 2400 (8“ … 96“)	**FDK:085L1104**
2-path (each incl. 1 pc.)	
• 230 mm (9.1“) for concrete pipe 60°, DN 600 … DN 3000 (24“ … 120“)	**FDK:085L1111**
• 160 mm (6.3“) stainless steel 60°, DN 200 … DN 3000 (8“ … 120“)	**FDK:085L1109**
• 160 mm (6.3“) carbon steel 60°, DN 200 … DN 3000 (8“ … 120“)	**FDK:085L1108**





The other transducer holder parts are either completely in stainless steel for the concrete and stainless steel pipes (AISI 316L/1.4404 or similar). For carbon pipes the part welded onto the pipe is in carbon steel (St.37 or similar). Thread part is stainless steel (AISI 316L/1.4404 or similar).

© Siemens 2021

3

Selection and ordering data (continued)

Mounting plate for SONOKIT SONO 3200 transducers

Description	Article No.	
1-path (each incl. 1 pc.)		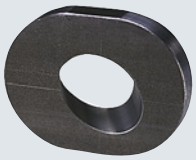
• Stainless steel plate, 45°, DN 100 … DN 150 (4“ … 6“)	**FDK:085L1113**	
• Carbon steel plate, 45°, DN 100 … DN 150 (4“ … 6“)	**FDK:085L1112**	
• Stainless steel plate, 60°, DN 200 … DN 2400 (8“ … 96“)	**FDK:085L1115**	
• Carbon steel plate, 60°, DN 200 … DN 2400 (8“ … 96“)	**FDK:085L1114**	
2-path (each incl. 1 pc.)		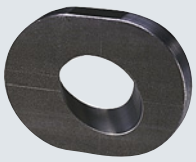
• Stainless steel plate, 60°, DN 200 … DN 3000 (8“ … 120“)	**FDK:085L1119**	
• Carbon steel plate, 60°, DN 200 … DN 3000 (8“ … 120“)	**FDK:085L1118**	

The mounting plates are either completely in stainless steel (AISI 316L/ 1.4404 or similar) or carbon steel (St.37 or similar).

SONO 3200 cable glands

Description	Article No.	
Black PA plastic, cable Ø 5 … 13 mm (1 pc.), temperature range -20 … 100 °C (-4 … +212 °F)	**A5E02246304**	
½" NPT grey PA plastic, cable Ø 5 … 9 mm (1 pc.), temperature range -20 … 100 °C (-4 … +212 °F)	**A5E02246309**	
½" NPT crome-plated brass, cable Ø 5 … 9 mm (1 pc.), temperature range -40 … 100 °C (-40 … +212 °F)	**A5E02246258**	
M20 stainless steel, cable Ø 4 … 6 mm (1 pc.), temperature range -25 … 200 °C (-13 … +392 °F), Ex i approval	**A5E02246194**	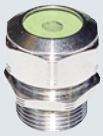
M20 stainless steel, cable Ø 5 … 8 mm (1 pc.), temperature range -60 … 180 °C (-76 … +356 °F), Ex d approval	**A5E02246311**	

© Siemens 2021

Circuit diagrams

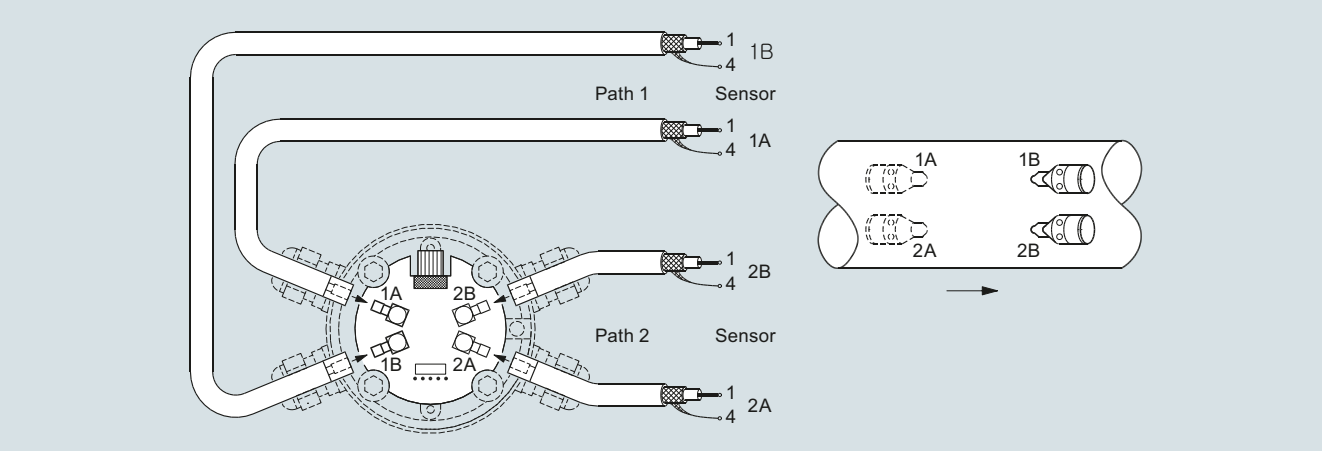

Electrical connection of SITRANS FUS060 and SONOKIT 2-path

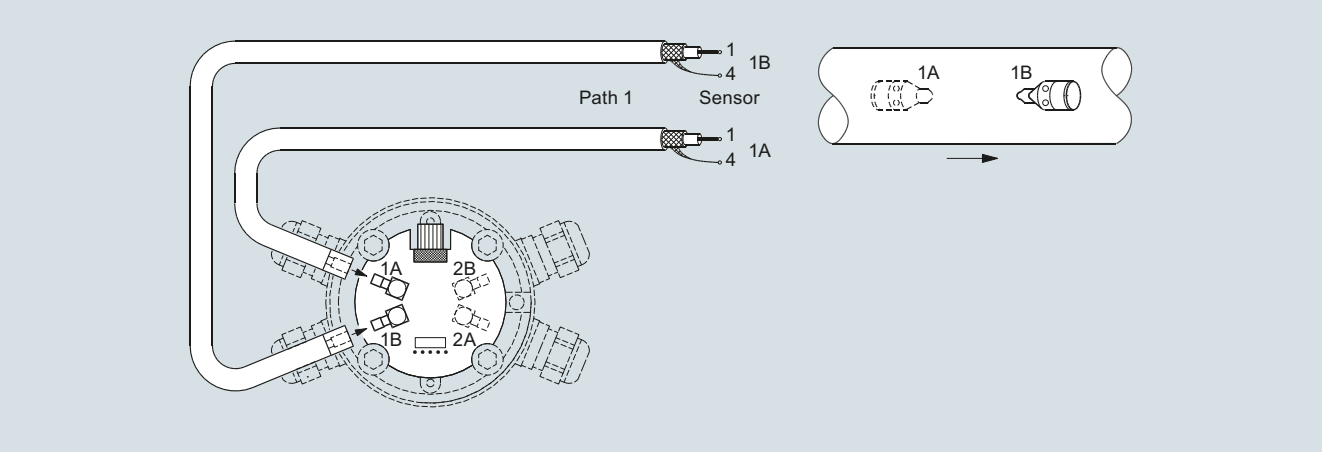

Electrical connection of SITRANS FUS060 and SONOKIT 1-path

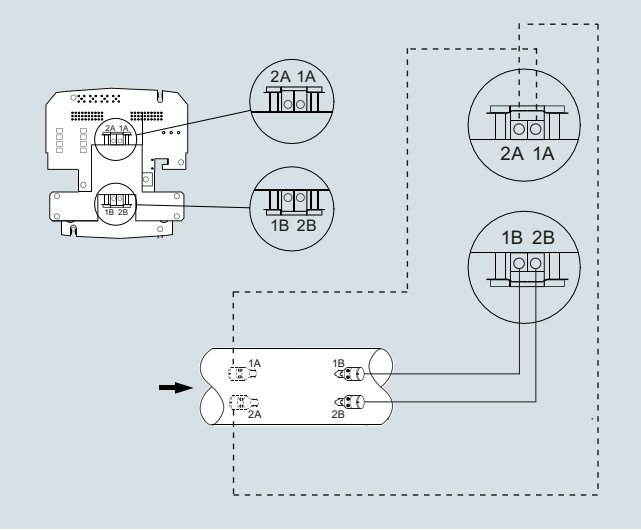

Electrical connection of SITRANS FUS080 and SONOKIT 2-path

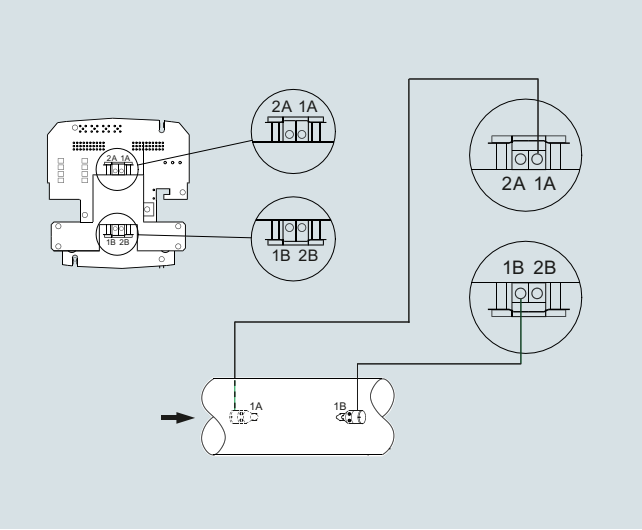

Electrical connection of SITRANS FUS080 and SONOKIT 1-path

© Siemens 2021

SITRANS FUS380 standard flowmeter

Overview



The 2-path flowmeter SITRANS FUS380 comes as battery or mains-powered and is designed to measure water flow in district heating plants, local networks, boiler stations, substations, chiller plants (including glycol mixes) and other general water applications.

The type-approved flowmeter version is named SITRANS FUE380 – see page 3/301.

Technically, the meter types SITRANS FUS380 and SITRANS FUE380 are completely identical, only difference is the calibration limit and the type approval for custody transfer.

Benefits

- Battery-powered up to 6 years
- 115/230 V mains-powered with back-up battery option in case of mains power failure
- Fast measuring frequency 15 Hz/0.5 Hz (230 V AC/Battery)
- Easy one-button straight forward display
- 2-path measuring principle for optimum accuracy
- Compact or remote mounting
- Measures on most district water qualities and water conductivities
- No pressure drop
- Long-term stability
- 2 galvanically isolated digital outputs for easy connection to a calculator (potential-free)
- Analog output 4 to 20 mA
- Bidirectional measurement, with 2 totalizers and outputs
- Dynamic range q_i (min) : q_s (max) up to 1:400

Application

The main application for SITRANS FUS380 is measurement of water flow or water flow in energy meter systems in district heating networks or chilled water (including glycol mixes).

Design

The 2-path design of SITRANS FUS380 ensures maximum accuracy under short inlet conditions. The flowmeter consists of a flow sensor pipe, 4 transducers/transducer cables and a transmitter SITRANS FUE080.

The unit is available in a compact or a remote version. Both versions are pre-mounted with short coax-cables. Remote transmitter up to a distance of 30 m by one Sensor link cable (SSL).

Compact mounting is only possible up to 120 °C (248 °F). The sensor must be isolated to protect transmitter from heat. The transmitter is available in an IP67/NEMA 4X/6 enclosure.

Function

Together with the SIMATIC PDM tool the FUS380 offers the possibility of testing and verifying the flowmeter on site and creating a printed "Qualification Certificate" with specific data that defines the quality status of the measurement.

The Qualification Certificate shows information about the actual status of the flowmeter:

- General settings, flowmeter and battery information, totalizer values, and pulse output settings
- Detailed information about the transmitter and the sensor functionality, and a main parameter list for evaluating the functionality of the flowmeter

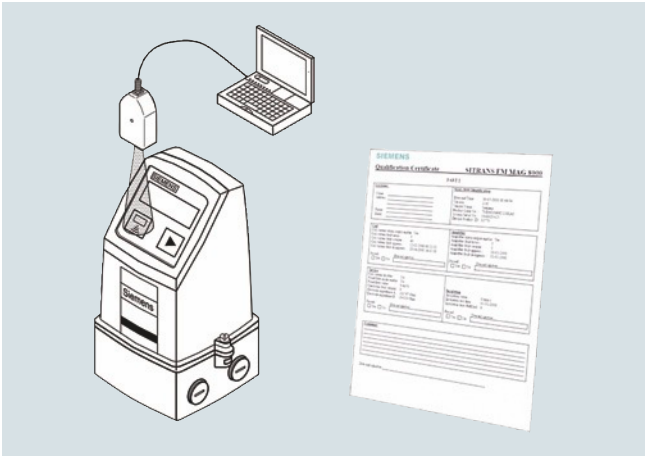

Integration

The flowmeter digital output is often used as input for an energy meter or as input for digital systems for remote reading.

SITRANS FUS380 has two digital output functions that can be individually selected.

Pulse output rate is defined when ordering. To get optimal benefit the pulse value must be selected as low as possible.

If the flowmeter forms part of an energy meter system for custody transfer, no further approvals are needed, except possible local approvals on the flowmeter.

© Siemens 2021

Configuration

Selection guide SITRANS FUS380, standard version

DN	Q_s (m^3/h)	Q_{max} (m^3/h) (105 % of Q_s)	Q_p (m^3/h)	Q_i (m^3/h) (1:100 of Q_p)	Cut-off (m^3/h) (95 % of Q_i)	Cut-off (% of Q_{max})	Typical pulse value[1] (l/pulse)
50	15	15.75	15	0.15	0,143	0,90	1
50	45	47.25	15	0.15	0,143	0,30	1
50	45	47.25	30	0.3	0.285	0,60	1
65	25	26.25	25	0.25	0.238	0,90	1
65	72	75.6	25	0.25	0.238	0,31	1
65	72	75.6	50	0.5	0,475	0,63	1
80	40	42	40	0.4	0,380	0,90	2.5
80	120	126	40	0.4	0,380	0,30	2.5
80	120	126	80	0.8	0,760	0,60	2.5
100	60	63	60	0.6	0,570	0,90	2.5
100	180	189	60	0.6	0,570	0,30	2.5
100	240	252	120	1.2	1,140	0,45	2.5
125	100	105	100	1	0,950	0,90	2.5
125	280	294	100	1	0,950	0,32	2.5
125	400	420	200	2	1,900	0,45	2.5
150	150	157.5	150	1.5	1,425	0,90	10
150	420	441	150	1.5	1,425	0,32	10
150	560	588	300	3	2,850	0,48	10
200	250	262.5	250	2.5	2,375	0,90	10
200	700	735	250	2.5	2,375	0,32	10
200	900	945	500	5	4,750	0,50	10
250	400	420	400	4	3,800	0,90	10
250	1120	1176	400	4	3,800	0,32	10
250	1400	1470	800	8	7,600	0,52	10
300	560	588	560	5.6	5,320	0,90	50
300	1560	1638	560	5.6	5,320	0,32	50
300	2100	2205	1120	11.2	10,640	0,48	50
350	750	787.5	750	7.5	7,125	0,90	50
350	2100	2205	750	7.5	7,125	0,32	50
350	2800	2940	1500	15	14,250	0,48	50
400	950	997.5	950	9.5	9,025	0,90	50
400	2660	2793	950	9.5	9,025	0,32	50
400	3600	3780	1900	19	18,050	0,48	50
500	1475	1548.75	1475	14.75	14,013	0,90	100
500	4130	4336.5	1475	14.75	14,013	0,32	100
500	5500	5775	2950	29.5	28,025	0,49	100
600	2150	2257.5	2150	21.5	20,425	0,90	100
600	6020	6321	2150	21.5	20,425	0,32	100
600	8000	8400	4300	43	40,850	0,49	100
700	2900	3045	2900	29	27,550	0,90	100
700	8120	8526	2900	29	27,550	0,32	100
700	10 800	11 340	5800	58	55,100	0,49	100
800	3800	3990	3800	38	36,100	0,90	100
800	10 640	11 172	3800	38	36,100	0,32	100
800	14 200	14 910	7600	76	72,200	0,48	100
900	5000	5250	3800	38	36,100	0,69	100
900	14 000	14 700	5000	50	47,500	0,32	100
900	20 000	21 000	5000	50	47,500	0,23	100
1000	6000	6300	3800	38	36,100	0,57	100
1000	16 800	17 640	6000	60	57,000	0,32	100
1000	24 000	25 200	12 000	120	114,000	0,45	100
1200	9000	9450	3800	38	36,100	0,38	100
1200	25 200	26 460	9000	90	85,500	0,32	100
1200	36 000	37 800	18 000	180	171,000	0,45	100

The values Q_i, Q_p and Q_s are shown on the system label of the FUS380. Q_i (Q_{min}) means the minimal and Q_p (Q_{nom}) the nominal flow rate. Q_s is the highest operatable flow rate. The maximum flow rate (Q_{max}) is 105 % of Q_s. The low flow cut-off is 50 % of Q_i.

In order to obtain best pulse output resolution in the range Q_{min} to Q_s of approx. 100 Hz at Q_s, two or three flow values for every dimension can be selected at ordering. Therefore the ordering data table also shows Q_p (Q_n). This flow rate is between Q_i (Q_{min}) and Q_s and indicates the normal or typical flow.

To get optimal benefit of the pulses the pulse value and pulse length shall be selected as low as possible. The following calculation formula can be used for determining the shortest pulse value at a pulse length of 5 ms: L/pulse > Q_s (m^3/h) /360.
For example Q_s = 300 m^3/h; L/pulse > 300/360; L/pulse > 0.83; therefore the pulse value must be 1 l/pulse

[1] Typical pulse values for SITRANS FUS380 with pulse length 5 ms. Other values are possible - please see the selections at the 7ME340 order codes.

© Siemens 2021

Technical specifications

Sensor design	2-path sensor with flanges and inline transducers wet-calibrated from factory
Nominal size (DN 50 … DN 80 in bronze)	DN 50, 65, 80, 100, 125, 150, 200, 250, 300, 350, 400, 500, 600, 700, 800, 1000, 1200
Pressure rate	PN 16, PN 25, PN 40 EN 1092-1 flanges: • type 01 (B): DN 100 to DN 125 • type 11 (B): DN 150 to DN 1200 • type 11 (B) 'design': DN 50 to DN 80
Pipe material	• DN 100 … DN 1200: Carbon Steel EN 1.0345/P235 GH, painted in light-gray. • DN 50 … DN 80: Die-cast bronze G-CuSn10/W2.1050.01 (EN 1982)
Transducer design	• DN 100 … DN 1200: Inline version and welded onto the pipe • DN 50 … DN 80: Screwed into the pipe
Transducer material	Stainless steel (AISI 316/1.4404)/brass ($CuZn_{36}Pb_2As$)
Sensor operating conditions	
Ambient temperature	
• Operation	-10 … +60 °C (14 … 140 °F) (MID version: -10 … +55 °C (14 … 131 °F))
• Storage	-40 … +85 °C (-40 … +185 °F)
Measured media	Heating water, according to VDI-2035 (pH 8.2 - 10.5), industrial VdTÜV information sheet 1466 and AGFW information sheet FW 510.
Media/surface temperature	
• DN 100 … DN 1200	Remote: 2 … 200 °C (35.6 … 392 °F)
• DN 50 … DN 80	Remote: 2 … 150 °C (35.6 … 302 °F)
• DN 50 ... DN 1200	Compact: 2 … 120 °C (35.6 … 248 °F)
Degree of protection	Sensor connection IP67/NEMA 4X/6
Max. flow velocity	DN 50 … DN 1200: 9 m/s (29.5 ft/s)
Electromagnetic compatibility	
• Emitted interference	To EN 55011/CISPR-11
• Noise immunity	To EN/IEC 61326-1 (Industry)
Transmitter	
The transmitter related to this system is the SITRANS FUS080. Technical specifications to the FUS080 see page 3/259	
Sensor cable	
Transducer cable length	Pre-mounted with short coax-cables
Sensor link cable length (SSL)	5, 10, 20, 30 m (16.4, 32.8, 65.6, 98.4 ft)
Certificates and approvals	
Conformity certificate (CE)	The devices are supplied as standard with a Siemens Certificate of Conformity on DVD.
Material certificate	Material certificate according EN 10204-3.1 is optionally available.
Calibration report	A standard calibration report is shipped with every flowmeter. Extended accredited ISO/IEC 17025 calibration certificates optionally available
Approvals	No custody transfer approvals

The sensors are approved according to EU directive 2014/68/EU regarding fluid group 1, classified in category III. Design according to EN 13480 (PED Directive).

SITRANS FUS380 uncertainty

	FUS380
Flow value setting	Predefined settings according to dimension
Approval	No approval
Flow rate v_f	0.02 … 9 m/s (0.065 … 29.5 ft/s)
Output A	Pulse: forward, reverse, forward net, reverse net (Preset: forward)
Output B	Pulse forward, reverse, forward net, reverse net, alarm, call-up (Preset: alarm)
Pulse value A & B (depending on DN value)	0.1 l/p, 0.25 l/p, 0.5 l/p, 1 l/p, 2.5 l/p, 10 l/p, 25 l/p, 50 l/p, 100 l/p, 250 l/p, 500 l/p, 1 m^3/p, 2.5 m^3/p, 5 m^3/p, 10 m^3/p, 25 m^3/p, 50 m^3/p, 100 m^3/p, 250 m^3/p, 500 m^3/p, 1000 m^3/p
Pulse width	5/10/20/50/100/200/500 ms
Flow unit setup	Preset: m^3/h
Volume unit setup	Preset: m^3

Flowmeter Calibration and traceability

To ensure continuous accurate measurement, flowmeters must be calibrated. The calibration is conducted at Siemens flow facilities with traceable instruments referring directly to the physical unit of measurement according to the International System of Units (SI).

Therefore, the calibration certificate ensures recognition of the test results worldwide, including the US (NIST traceability). Siemens offers accredited calibrations assured to ISO 17025 in the flow range from 0.0001 m^3/h to 10 000 m^3/h. Siemens Flow Instruments accredited laboratories are recognized by ILAC MRA (International Laboratory Accreditation Corporation - Mutual Recognition Arrangement) ensuring international traceability and recognition of the test results worldwide.

A standard calibration certificate with Q_n as selected flow is shipped with each SITRANS FUS380. This production calibration protocol consists of 2 x 3 points at Q_i, 10 % Q_p and Q_p (max. 4 200 m^3/h).

Accuracy SITRANS FUS380:

± 0.5 % for 0.5 m/s < v < 10 m/s and ± 0.25/$V_{act.}$ [%] below 0.5 m/s

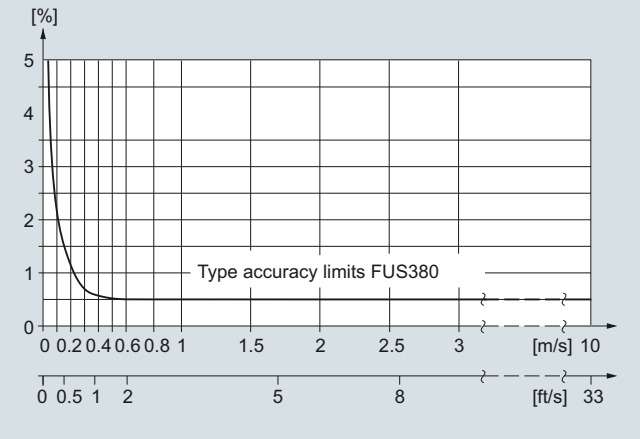

© Siemens 2021

Selection and ordering data

Flowmeter SITRANS FUS380 (standard) ↗

Article No. **7ME3400-** 0 - A — Ord. Code

↗Click on the Article No. for the online configuration in the PIA Life Cycle Portal.

Diameter	Approval	Pressure rating	Flow setting [m^3/h] Q_p (Q_n) is the normal flow according to the approval requirements. Q_p and Q_s is shown on the system label. Q_p (Q_n)	Q_s	Article No.
Pipe material: Die-cast bronze					
DN 50 (2")	EN 1434	PN 40	15	15	1 A
DN 50 (2")	EN 1434	PN 40	15	45	1 C
DN 50 (2")	OIML R75	PN 40	30	45	1 D
DN 65 (2½")	EN 1434	PN 40	25	25	1 E
DN 65 (2½")	EN 1434	PN 40	25	72	1 G
DN 65 (2½")	OIML R75	PN 40	50	72	1 H
DN 80 (3")	EN 1434	PN 40	40	40	1 J
DN 80 (3")	EN 1434	PN 40	40	120	1 L
DN 80 (3")	OIML R75	PN 40	80	120	1 M
Pipe material: Carbon steel					
DN 100 (4")	EN 1434	PN 16, PN 40	60	60	1 N
DN 100 (4")	EN 1434	PN 16, PN 40	60	180	1 Q
DN 100 (4")	OIML R75	PN 16, PN 40	120	240	1 R
DN 125 (5")	EN 1434	PN 16, PN 40	100	100	1 S
DN 125 (5")	EN 1434	PN 16, PN 40	100	280	1 U
DN 125 (5")	OIML R75	PN 16, PN 40	200	400	1 V
DN 150 (6")	EN 1434	PN 16, PN 40	150	150	2 A
DN 150 (6")	EN 1434	PN 16, PN 40	150	420	2 C
DN 150 (6")	OIML R75	PN 16, PN 40	300	560	2 D
DN 200 (8")	EN 1434	PN 16, PN 25, PN 40	250	250	2 E
DN 200 (8")	EN 1434	PN 16, PN 25, PN 40	250	700	2 G
DN 200 (8")	OIML R75	PN 16, PN 25, PN 40	500	900	2 H
DN 250 (10")	EN 1434	PN 16, PN 25, PN 40	400	400	2 J
DN 250 (10")	EN 1434	PN 16, PN 25, PN 40	400	1120	2 L
DN 250 (10")	OIML R75	PN 16, PN 25, PN 40	800	1400	2 M
DN 300 (12")	EN 1434	PN 16, PN 25	560	560	2 N
DN 300 (12")	EN 1434	PN 16, PN 25	560	1560	2 Q
DN 300 (12")	OIML R75	PN 16, PN 25	1120	2100	2 R
DN 350 (14")	EN 1434	PN 16, PN 25	750	750	2 S
DN 350 (14")	EN 1434	PN 16, PN 25	750	2100	2 U
DN 350 (14")	OIML R75	PN 16, PN 25	1500	2800	2 V
DN 400 (16")	EN 1434	PN 16, PN 25	950	950	3 A
DN 400 (16")	EN 1434	PN 16, PN 25	950	2660	3 C
DN 400 (16")	OIML R75	PN 16, PN 25	1900	3600	3 D
DN 500 (20")	EN 1434	PN 16, PN 25	1475	1475	3 J
DN 500 (20")	EN 1434	PN 16, PN 25	1475	4130	3 L
DN 500 (20")	OIML R75	PN 16, PN 25	2950	5500	3 M
DN 600 (24")	EN 1434	PN 16, PN 25	2150	2150	3 S
DN 600 (24")	EN 1434	PN 16, PN 25	2150	6020	3 U
DN 600 (24")	OIML R75	PN 16, PN 25	4300	8000	3 V
DN 700 (28")	EN 1434	PN 16, PN 25	2900	2900	4 E
DN 700 (28")	EN 1434	PN 16, PN 25	2900	8120	4 G
DN 700 (28")	OIML R75	PN 16, PN 25	5800	10800	4 H
DN 800 (32")	EN 1434	PN 16, PN 25	3800	3800	4 N
DN 800 (32")	EN 1434	PN 16, PN 25	3800	10640	4 Q
DN 800 (32")	OIML R75	PN 16, PN 25	7600	14200	4 R

© Siemens 2021

Selection and ordering data

Article No.

Flowmeter SITRANS FUS380 (standard) — **7ME3400-** ■■■■0 - ■■A■ — Ord. Code ■■■

Diameter	Approval	Pressure rating	Flow setting [m³/h] Q_p (Q_n)	Q_s	Article No.
Remote only					
DN 900 (36")	EN 1434	PN 16, PN 25	5000	5000	5 A
DN 900 (36")	EN 1434	PN 16, PN 25	5000	14000	5 C
DN 900 (36")	OIML R75	PN 16, PN 25	10000	20000	5 D
DN 1000 (40")	EN 1434	PN 16, PN 25	6000	6000	5 J
DN 1000 (40")	EN 1434	PN 16, PN 25	6000	16800	5 L
DN 1000 (40")	OIML R75	PN 16, PN 25	12000	24000	5 M
DN 1200 (48")	EN 1434	PN 16	9000	9000	5 S
DN 1200 (48")	EN 1434	PN 16	9000	25200	5 U
DN 1200 (48")	OIML R75	PN 16	18000	36000	5 V

Flange norm and pressure rating

System without sensor - only a transmitter FUS080 as spare part - settings as defined with this Article No. — A

EN 1092-1
- PN 16 (DN 100 ... 1200) — C
- PN 25 (DN 200 ... 1000) — D
- PN 40 (DN 50 ... 250) — E

Compact/remote connection

Note: Sensor cable always firmly connected to connection box.

Compact version, liquid max. 120 °C (248 °F)

Remote version, liquid max. 150/200 °C (302/392 °F) — 0

Sensor link cable (SSL)
- 5 m (16.4 ft) — 2
- 10 m (32.8 ft) — 3
- 20 m (65.6 ft) — 4
- 30 m (98.4 ft) — 5

Pulse output value setup

To get optimal benefit of the pulses the pulse value and pulse length shall be selected as low as possible. The following calculation formula can be used for determining the shortest pulse value at a pulse length of 5 ms: L/pulse > Q_s (m³/h) /360.
For example Q_s = 300 m³/h; L/pulse > 300/360; L/pulse > 0.83; therefore the pulse value must be 1 l/pulse

Pulse value
- 0.1 l/pulse — 1
- 1 l/pulse — 2
- 2.5 l/pulse — 3
- 10 l/pulse — 4
- 50 l/pulse — 5
- 100 l/pulse — 6
- 250 l/pulse — 7
- 1 m³/pulse — 8
- 0.25 l/pulse — 9 — N 0 A
- 0.5 l/pulse — 9 — N 0 B
- 5 l/pulse — 9 — N 0 C
- 25 l/pulse — 9 — N 0 D
- 500 l/pulse — 9 — N 0 E
- 2.5 m³/pulse — 9 — N 0 F
- 5 m³/pulse — 9 — N 0 G
- 10 m³/pulse — 9 — N 0 H
- 25 m³/pulse — 9 — N 0 J
- 50 m³/pulse — 9 — N 0 K
- 100 m³/pulse — 9 — N 0 L
- 250 m³/pulse — 9 — N 0 M
- 500 m³/pulse — 9 — N 0 N
- 1000 m³/pulse — 9 — N 0 P

© Siemens 2021

Selection and ordering data

	Article No.
Flowmeter SITRANS FUS380 (standard)	**7ME3400-** 0 - A Ord. Code
Flowmeter SITRANS FUS380 (standard)	
Transmitter variant FUS080 power/analaog output	
115 ... 230 V AC	B
3.6 V Lithium battery, dual pack is included	D
115 ... 230 V AC, backup 3.6 V DC Lithium battery, single pack is included	E
3.6 V battery version (no battery pack included)	G
Option with 4 ... 20 mA analog output module • 115 ... 230 V AC	R
• 115 ... 230 V AC, backup 3.6 V DC, Lithium battery, single pack is included	U
Note: Lithium batteries are subject to special transportation regulations according to United Nations "Regulation of Dangerous Goods, UN 3090 and UN 3091". Special transport documentation is required to observe these regulations. This may influence both transport time and costs.	
Pulse width setup	
Pulse width	
5 ms (standard)	2
10 ms	3
20 ms	4
50 ms	5
100 ms	6
200 ms	7
500 ms	8

Additional information Please add "**-Z**" to Article No. and specify Order code(s) and plain text.	Order code
Calibration/certificate FUS380	
Production calibration for DN 50 ... 1200 with Q_n as selected in diameter. Incl. Calibration protocol: 2 x 3 points, Q_i, 10 % Q_p and Q_p (max. 8000 m^3/h).	**Included**
Accredited Siemens ISO/IEC 17025 calibration for DN 50 ... 200 with Q_n as selected in diameter. Certificate: 2 x 5 points, Q_i, 5 %, 10 %, 50 % and 100 % of Q_p (max. 630 m^3/h).	**D20**
Accredited Siemens ISO/IEC 17025 calibration for DN 250 ... 600 with Q_n as selected in diameter. Certificate: 2 x 5 points, 5 %, 10 %, 50 % and 100 % of Q_p (max. 2800 m^3/h).	**D21**
Accredited Siemens ISO/IEC 17025 calibration, DN 500 ... 1200 with Q_n as selected in diameter. Certificate: 2 x 5 points, Q_i, 5 %, 10 %, 50 % and 100 % of Q_p (max. 8000 m^3/h).	**D22**
Output B as reverse flow pulses. No calibration/verification of this function.	**E21**
Material certificate	
EN 10204-3.1 (pipe material)	**C12**
Regional specific approval	
KCC marking for Korea	**W28**
Tag name plate	
Stainless steel TAG plate (1 x 24 x 80 mm), wire fixed. Font size depends on text length: 8 mm for 1 ... 10 characters, 4 mm for 11 ... 20 characters (specify in plain text).	**Y17**

Please use online Product selector to get latest updates:

https://www.pia-portal.automation.siemens.com

Flowmeter SITRANS FUS380 operating instructions, accessories and spare parts

Operating instructions

Description	Article No.
• English	**A5E00730100**
• German	**A5E00740611**

All literature is available to download for free, in a range of languages, at
http://www.siemens.com/processinstrumentation/documentation

For accessories and spare parts see the section about FUS080/FUE080.

© Siemens 2021

3

Dimensional drawings

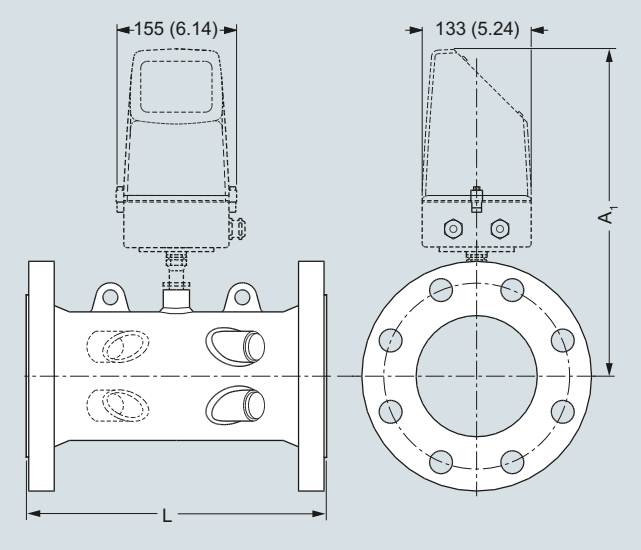

Transmitter IP67/NEMA 4X/6, wall mounting

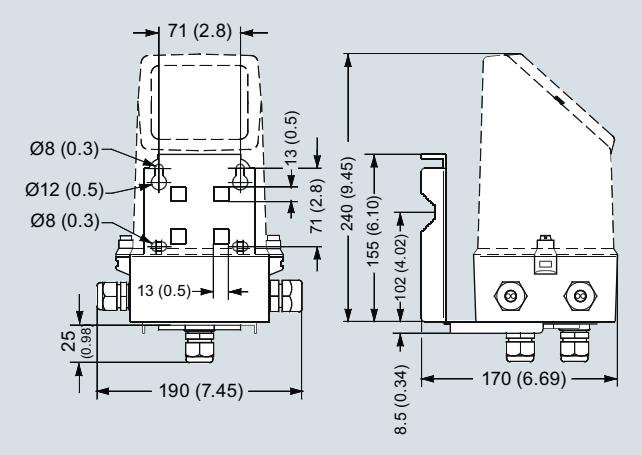

Dimensions in mm (inch)

Sensor dimensions for FUS380 and FUE380

Size	PN 16		PN 25		PN 40			
	L	Weight	L	Weight	L	Weight	A_1	Lift hug
DN	mm	kg	mm	kg	mm	kg	mm	
50	-	-	-	-	300 +0/-2	10	350	No
65	-	-	-	-	300 +0/-2	15	363	No
80	-	-	-	-	350 +0/-2	18	370	No
100	350 +0/-2	15	-	-	350 +0/-2	18	372	No
125	350 +0/-2	18	-	-	350 +0/-2	24	385	No
150	500 +0/-3	28	-	-	500 +0/-3	34	399	No
200	500 +0/-3	38	500 +0/-3	47	500 +0/-3	55	425	Yes
250	600 +0/-3	60	600 +0/-3	76	600 +0/-3	91	452	Yes
300	500 +0/-3	66	500 +0/-3	81	-	-	478	Yes
350	550 +0/-3	94	550 +0/-3	121	-	-	495	Yes
400	600 +0/-3	124	600 +0/-3	153	-	-	520	Yes
500	625 +0/-3	194	625 +0/-3	231	-	-	570	Yes
600	750 +0/-3	303	750 +0/-3	365	-	-	622	Yes
700	875 +0/-3	361	875 +0/-3	565	-	-	673	Yes
800	1000 +0/-3	494	1000 +0/-3	770	-	-	724	Yes
900	1230 +6/-6	535	1300 +6/-6	835	-	-	775	Yes
1000	1300 +6/-6	594	1370 +6/-6	1000	-	-	826	Yes
1200	1360 +6/-6	732	-	-	-	-	928	Yes

Notes:

- Weight for transmitter/electronics 1.5 kg (compact version) or approximately 5 kg (remote version including 10 m cable set)
- - Means not available
- All weights are **approximate**
- For flange values - see norm EN 1092-1

© Siemens 2021

Dimensional drawings (continued)

Size	PN 16		PN 25		PN 40			
	L	Weight	L	Weight	L	Weight	A_1	Lift hug
inch	inch	lb	inch	lb	inch	lb	inch	
2	-	-	-	-	11.81 +0/-0.08	22	13.78	No
2½	-	-	-	-	11.81 +0/-0.08	33	14.30	No
3	-	-	-	-	13.78 +0/-0.08	40	14.57	No
4	13.78 +0/-0.08	33	-	-	13.78 +0/-0.08	40	14.65	No
5	13.78 +0/-0.08	40	-	-	13.78 +0/-0.08	53	15.16	No
6	19.68 +0/-0.12	62	-	-	19.68 +0/-0.12	75	15.71	No
8	19.68 +0/-0.12	84	19.68 +0/-0.12	104	19.68 +0/-0.12	121	16.74	Yes
10	23.62 +0/-0.12	132	23.62 +0/-0.12	168	23.62 +0/-0.12	201	17.80	Yes
12	19.68 +0/-0.12	146	19.68 +0/-0.12	179	-	-	18.82	Yes
14	21.65 +0/-0.12	207	21.65 +0/-0.12	267	-	-	19.49	Yes
16	23.62 +0/-0.12	273	23.62 +0/-0.12	337	-	-	20.48	Yes
20	24.61 +0/-0.12	428	24.61 +0/-0.12	509	-	-	22.45	Yes
24	29.53 +0/-0.12	668	29.53 +0/-0.12	805	-	-	24.49	Yes
28	34.45 +0/-0.12	796	34.45 +0/-0.12	1246	-	-	26.50	Yes
32	39.37 +0/-0.12	1089	39.37 +0/-0.12	1698	-	-	28.51	Yes
36	48.43 +0/-0.24	1179	51.18 +0/-0.24	1841	-	-	30.52	Yes
40	51.18 +0/-0.24	1310	53.94 +0/-0.24	2205	-	-	32.52	Yes
48	53.34 +0/-0.24	1614	-	-	-	-	36.54	Yes

Notes:

- Weight for transmitter/electronics 3.3 lb (compact version) or approximately 11 lb (remote version including 32.8 ft cable set)
- - Means not available
- All weights are **approximate**
- For flange values - see norm EN 1092-1

© Siemens 2021

3

Circuit diagrams

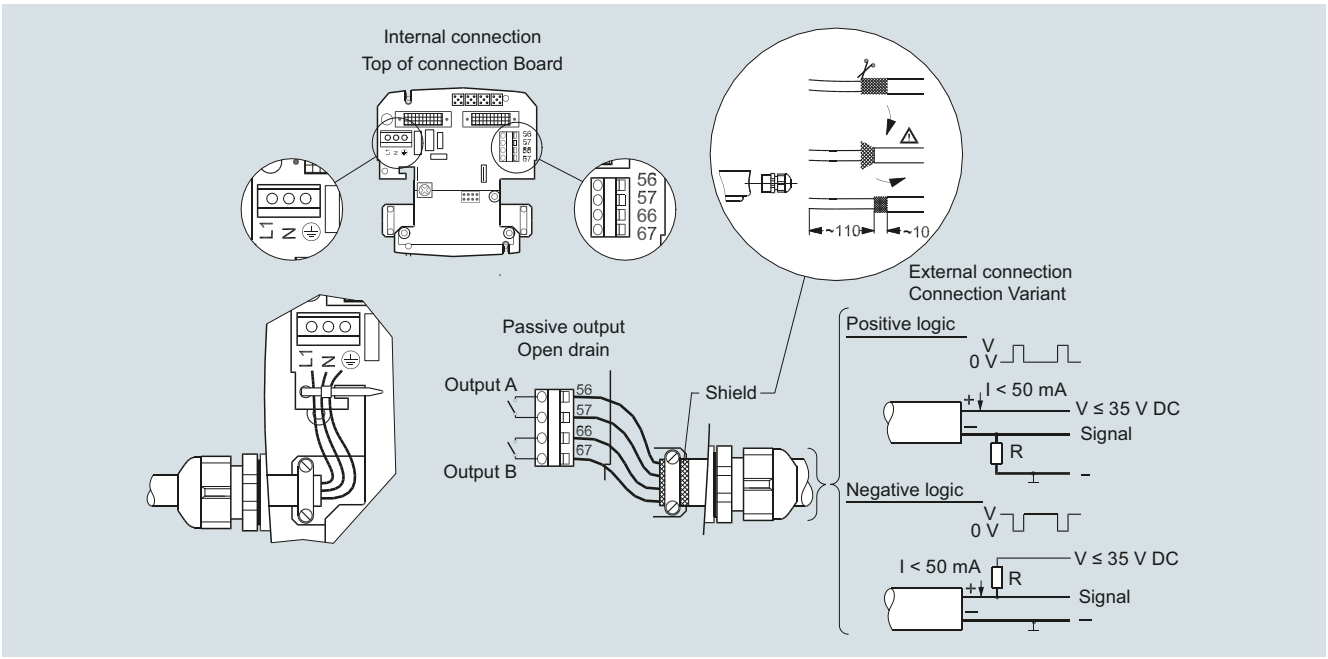

Electrical connection of transmitter SITRANS FUS/FUE380

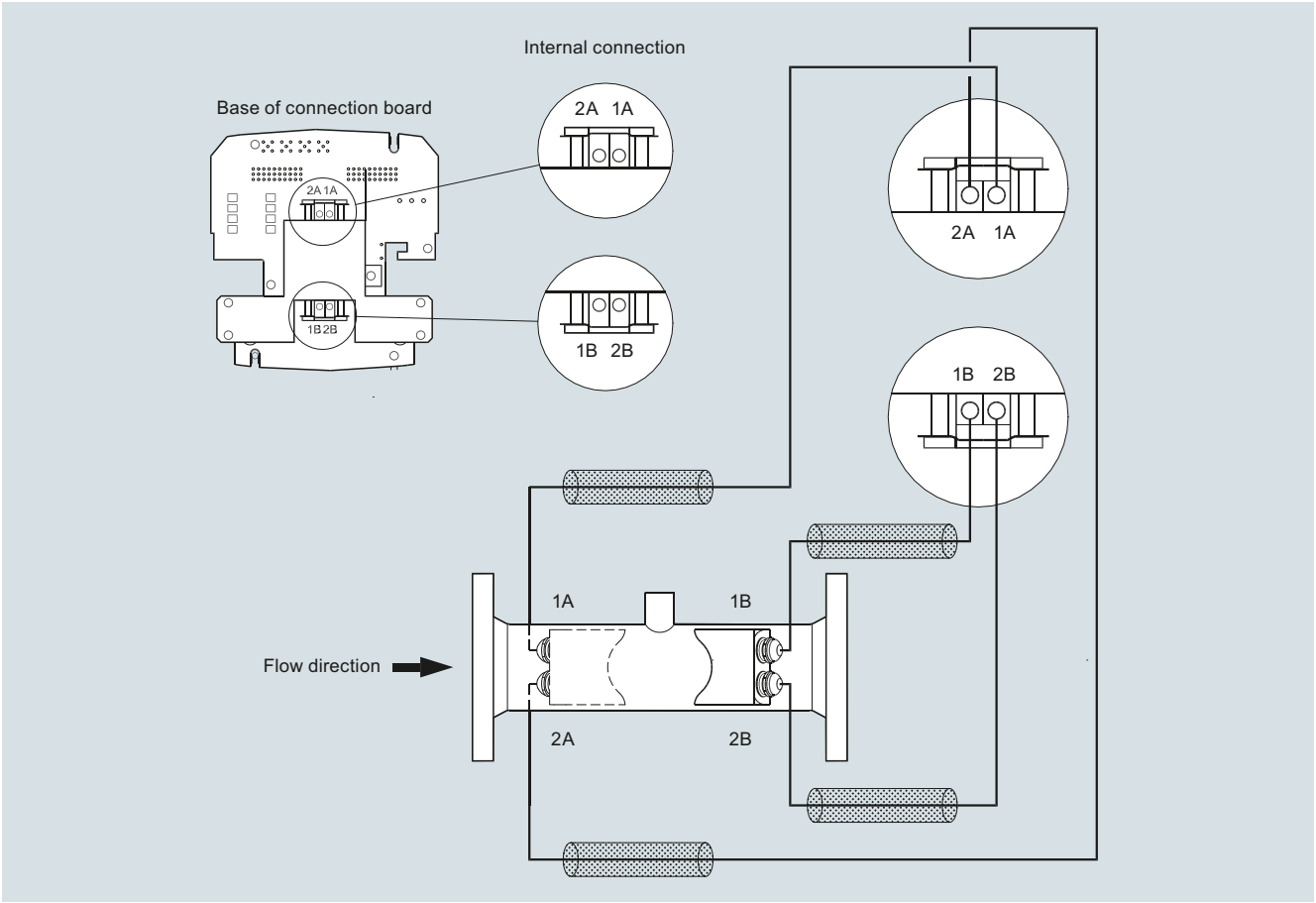

Electrical connection of sensor SITRANS FUS/FUE380

© Siemens 2021

Overview



The 2-path flowmeter SITRANS FUE380 comes as battery or mains-powered and is designed to measure water flow in district heating plants, local networks, boiler stations, substations, chiller plants (including glycol mixes without type approval) and other general water applications.

The flowmeter FUE380 is approved according to energy meter standards EN 1434 class 2, OIML R 75 class 2 and MID class 2. Metrological parameters are protected against manipulation. The type-approved flowmeter version is named SITRANS FUE380. For a standard flowmeter type FUS380 without a type approval, see the section about FUS380.

Technically, the meter types SITRANS FUS380 and SITRANS FUE380 are completely identical, only difference is the calibration limit and the type approval for custody transfer.

Benefits

- Battery-powered up to 6 years
- 115/230 V mains-powered with back-up battery option in case of mains power failure
- Fast measuring frequency 15 Hz/0.5 Hz (230 V AC/Battery)
- Easy one-button straight forward display
- 2-path measuring principle for optimum accuracy
- Compact or remote mounting
- Measures on most district water qualities and water conductivities
- No pressure drop
- Long-term stability
- 2 galvanically isolated digital outputs for easy connection to a calculator (potential-free)
- Analog output 4 to 20 mA
- Bidirectional measurement, with 2 totalizers and outputs
- Dynamic range Q_i:Q_p up to 1:50/100 or max. range Q_i:Q_s up to 1:400

Application

The main application for SITRANS FUE380 is measurement of water flow or water flow in energy meter systems for custody transfer in district heating networks or chilled water (including glycol mixes without type approval).

Combined with an energy calculator and a pair of temperature sensors, SITRANS FUE380 can be used as part of an energy meter system. For this purpose Siemens offers energy calculator SITRANS FUE950.

Design

The 2-path design of SITRANS FUE380 ensures maximum accuracy under short inlet conditions. The approved flowmeter consists of a flow sensor pipe, 4 transducers/transducer cables and a transmitter SITRANS FUE080.

The unit is available in a compact or a remote version. Both versions are pre-mounted with short coax-cables. Remote transmitter up to a distance of 30 m by one Sensor link cable (SSL).

Compact mounting is only possible up to 120 °C (248 °F). The sensor must be isolated to protect transmitter from heat. The transmitter is available in an IP67/NEMA 4X/6 enclosure.

FUE380 MI-004 approval

The SITRANS FUE380 program is type-approved according to international energy meter standard EN 1434. On 1 November 2006 the MI-004 energy meter directive became effective providing that all energy meters with a MI-004 verification label can be sold across the EU borders.

The FUE380 are MI-004 verified and labeled products according to Directive 2014/32/EU of the European Parliament and Council of 26 February, 2014 on measuring instruments, Annex IV Thermal Energy Meters (MI-004), in sizes from DN 50 to DN 1200.

The MID certification is obtained as module B + module D approvals according to the above-mentioned directive.

Module B: MI-004 Type approval according to EN 1434: 2007 (approved for media water)

Module D: Quality insurance MID approval of production

The MID system label with the approval information is placed on the side of the transmitter and on the sensor. An example of the product label is shown below:


SIEMENS
SITRANS FUE380
System No.: 7ME34101UC323BR2
513705H266
Transmitter: 7ME3450-0AA30-2AB0
009509H296
Sensor: FDK:087H2504 888410H276
qs: 280m3/h
qp / qi: 100 / 2m3/h
Pulse value: 2.5l/p
Pulse width: 5ms
Cable length: 10m Year of Manuf.: 2016
Cal. factor: 1.027495 SW vers.: 2.03
T.amb.: -10°C to +55°C
Certificate No.: DK-0200 MI004-005
Accuracy Class: 2
Environmental Class: E2, M1
M16 0200 0200
Siemens A/S Flow Instruments, 6400 Soenderborg, Denmark
Made in France

FUE380 transmitter label (with MID first verfication)

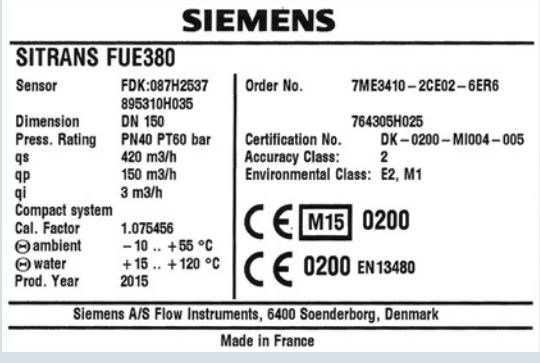
SIEMENS
SITRANS FUE380
Sensor FDK:087H2537
895310H0035
Dimension DN 150
Press. Rating PN40 PT60 bar
qs 420 m3/h
qp 150 m3/h
qi 3 m3/h
Compact system
Cal. Factor 1.075456
ambient -10 .. +55 °C
water +15 .. +120 °C
Prod. Year 2015
Order No. 7ME3410-2CE02-6ER6
764305H025
Certification No. DK-0200-MI004-005
Accuracy Class: 2
Environmental Class: E2, M1
M15 0200
0200 EN13480
Siemens A/S Flow Instruments, 6400 Soenderborg, Denmark
Made in France

FUE380 sensor label (with MID first verification)

© Siemens 2021

SITRANS FUE380 flowmeter with CT approval

Function

Together with the SIMATIC PDM tool the FUE380 offers the possibility of testing and verifying the flowmeter on site and creating a printed "Qualification Certificate" with specific data that defines the quality status of the measurement.

The Qualification Certificate shows information about the actual status of the flowmeter:

- General settings, flowmeter and battery information, totalizer values, and pulse output settings
- Detailed information about the transmitter and the sensor functionality, and a main parameter list for evaluating the functionality of the flowmeter

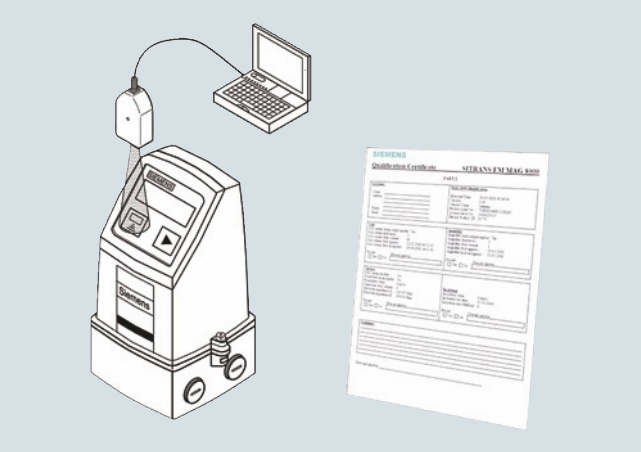

Integration

The flowmeter digital output is often used as input for an energy meter or as input for digital systems for remote reading.

SITRANS FUE380 has two digital output functions that can be individually selected.

Pulse output rate is defined when ordering. To get optimal benefit the pulse value must be selected as low as possible.

If the flowmeter forms part of an energy meter system for custody transfer, no further approvals are needed, except possible local approvals on the flowmeter.

Configuration

Selection guide SITRANS FUE380, type-approved flowmeter

DN	Q_s (m^3/h)	Q_{max} (m^3/h) (105% of Q_s)	Q_p (m^3/h)	Q_i (m^3/h) (1:50 of Q_p)	Q_i (m^3/h) (1:100 of Q_p) EN 1434/MID	Cut-off (m^3/h) (95% of Q_i)	Cut-off (% of Q_{max})	Typical pulse value (l/pulse)
		105%		**50**	**100**	**95%**		
50	30	31.5	15	0.3	-	0.285	0.95	1
50	45	47.25	15	0.3	-	0.285	0.63	1
50	45	47.25	30	-	0.3	0.285	0.63	1
65	50	52.5	25	0.5	-	0.475	0.95	1
65	72	75.6	25	0.5	-	0.475	0.66	1
65	72	75.6	50	-	0.5	0.475	0.66	1
80	80	84	40	0.8	-	0.760	0.95	2.5
80	120	126	40	0.8	-	0.760	0.63	2.5
80	120	126	80	-	0.8	0.760	0.63	2.5
100	120	126	60	1.2	-	1.140	0.95	2.5
100	180	189	60	1.2	-	1.140	0.63	2.5
100	180	189	120	-	1.2	1.140	0.63	2.5
125	200	210	100	2.0	-	1.900	0.95	2.5
125	280	294	100	2.0	-	1.900	0.68	2.5
125	280	294	200	-	2.0	1.900	0.68	2.5
150	300	315	150	3.0	-	2.850	0.95	10
150	420	441	150	3.0	-	2.850	0.68	10
150	420	441	300	-	3.0	2.850	0.68	10
200	500	525	250	5.0	-	4.750	0.95	10
200	700	735	250	5.0	-	4.750	0.68	10
200	700	735	500	-	5.0	4.750	0.68	10
250	800	840	400	8.0	-	7.600	0.95	10
250	1120	1176	400	8.0	-	7.600	0.68	10
250	1120	1176	800	-	8.0	7.600	0.68	10
300	1120	1176	560	11.2	-	10.640	0.95	50

© Siemens 2021

Configuration (continued)

DN	Q_s (m^3/h)	Q_{max} (m^3/h) (105% of Q_s)	Q_p (m^3/h)	Q_i (m^3/h) (1:50 of Q_p)	Q_i (m^3/h) (1:100 of Q_p) EN 1434/MID	Cut-off (m^3/h) (95% of Q_i)	Cut-off (% of Q_{max})	Typical pulse value (l/pulse)
300	1560	1638	560	11.2	-	10.640	0.68	50
300	1560	1638	1120	-	11.2	10.640	0.68	50
350	1500	1575	750	15.0	-	14.250	0.95	50
350	2100	2205	750	15.0	-	14.250	0.68	50
350	2100	2205	1500	-	15.0	14.250	0.68	50
400	1900	1995	950	19.0	-	18.050	0.95	50
400	2660	2793	950	19.0	-	18.050	0.68	50
400	2660	2793	1900	-	19.0	18.050	0.68	50
500	2950	3097.5	1475	29.5	-	28.025	0.95	100
500	4130	4336.5	1475	29.5	-	28.025	0.68	100
500	4130	4336.5	2950	-	29.5	28.025	0.68	100
600	4300	4515	2150	43.0	-	40.850	0.95	100
600	6020	6321	2150	43.0	-	40.850	0.68	100
600	6020	6321	4300	-	43.0	40.850	0.68	100
700	5800	6090	2900	58.0	-	55.100	0.95	100
700	8120	8526	2900	58.0	-	55.100	0.68	100
700	8120	8526	5800	-	58.0	55.100	0.68	100
800	7600	7980	3800	76.0	-	72.200	0.95	100
800	10 640	11 172	3800	76.0	-	72.200	0.68	100
800	10 640	11 172	7600	-	76.0	72.200	0.68	100
900	10 000	10 500	5000	100.0	-	95.000	0.95	100
900	14 000	14 700	5000	100.0	-	95.000	0.68	100
900	14 000	14 700	10 000	-	100.0	95.000	0.68	100
1000	14 000	14 700	10 000	-	100.0	95.000	0.68	100
1200	14 000	14 700	10 000	-	200.0	190.000	1.36	100

Dynamic range Q_i:Q_p: better than 1:100 to OIML R 75 class 2 and MID EN 1434 class 2.

Q_i (Q_{min}) means the minimal and Q_p (Q_{nom}) the nominal flow rate according to the approval requirements.

Q_s is the highest operatable flow rate. The maximum flow rate (Q_{max}) is 105 % of Q_s. The low flow cut off is 95 % of Q_i.

Q_i, Q_p and Q_s are shown on the system nameplate of the FUE380.

In order to obtain best pulse output resolution in the range Q_{min} to Q_s of approx. 100 Hz at Q_s, two or three flow values for every dimension can be selected at ordering. Therefore the ordering data table also shows Q_p (Q_n). This flow rate is between Q_i (Q_{min}) and Q_s and indicates the normal or typical flow according to the approval requirements.

Note:

The minimum flow (Q_i) should be checked in the PIA-selector or product master data base (PMD).

To get optimal benefit of the pulses the pulse value and pulse length shall be selected as low as possible. The following calculation formula can be used for determining the shortest pulse value at a pulse length of 5 ms: L/pulse > Q_s (m^3/h) /360.
For example Q_s = 300 m^3/h; L/pulse > 300/360; L/pulse > 0.83; therefore the pulse value must be 1 l/pulse

© Siemens 2021

SITRANS FUE380 flowmeter with CT approval

Technical specifications

Pipe design	2-path sensor with flanges and inline transducers wet-calibrated from factory
Nominal size welded version (DN 50 ... DN 80 in bronze)	DN 50, 65, 80, 100, 125, 150, 200, 250, 300, 350, 400, 500, 600, 700, 800, 900, 1000, 1200
Pressure rate	PN 16, PN 25, PN 40 EN 1092-1 EN 1092-1 flanges: • type 01 (B): DN 100 to DN 125 • type 11 (B): DN 150 to DN 200 • type 11 (B) 'design': DN 50 to DN 80
Pipe material	• DN 100 … DN 1200: Carbon Steel EN 1.0345/P235 GH, painted in light-gray. • DN 50 … DN 80: Die-cast bronze G-CuSn10/W2.1050.01 (EN1982)
Transducer design	• DN 100 … DN 1200: Inline version and welded onto the pipe • DN 50 … DN 80: Screwed into the pipe
Transducer material	Stainless steel (AISI 316/1.4404)/ brass ($CuZn_{36}Pb_2As$)
Sensor operating conditions	
Ambient temperature • Operation	-10 … +60 °C (14 … 140 °F)(MID version: -10 … +55 °C (14 … 131 °F))
• Storage	-40 … +85 °C (-40 … +185 °F)
Measured media	Heating water, according to VDI-2035 (pH 8.2 - 10.5), industrial VdTÜV information sheet 1466 and AGFW information sheet FW 510.
Media/surface temperature	
• DN 100 … DN 1200	Remote: 2 … 200 °C (35.6 … 392 °F) MID: min. +15 °C/+59 °F
• DN 50 … DN 80	Remote: 2 … 150 °C (35.6 … 302 °F) MID: min. +15 °C/+59 °F
• DN 50 … DN 1200	Compact: 2 … 120 °C (35.6 … 248 °F) MID: min. +15 °C/+59 °F
Degree of protection	Sensor connection IP67/NEMA 4X/6
Electromagnetic compatibility • Emitted interference • Noise immunity • MID	 To EN 55011/CISPR-11 To EN/IEC 61326-1 (Industry) Environment class E2 and M1
Max. flow velocity at Q_s	DN 50 … DN 1200: 9 m/s (29.5 ft/s)
Transmitter	
The transmitter related to this system is the SITRANS FUS080.	
Technical specifications to the FUS080 see page 3/259.	
Sensor cable	
Transducer cable length	Pre-mounted with short coax-cables
Sensor Ink cable length (SSL)	5, 10, 20, 30 m (16.4, 32.8, 65.6, 98.4 ft)
Certificates and approvals	
Conformity certificate (CE)	The devices are supplied as standard with a Siemens Certificate of Conformity on DVD.
Material certificate	Material certificate according EN 10204-3.1 is optionally available.
Calibration report	A standard calibration report is shipped with every flowmeter. Extended accredited ISO/IEC 17025 calibration certificates optionally available
Approvals	• Approval standards: N 1434 and OIML R 75 Class 2 • Type approval: ID, MI-004, class 2 approval and certification (according to EN 434) • CPA/CMC (China)

The sensors are approved according to EU directive 2014/68/EU regarding fluid group 1, classified in category III. Design according to EN 13480 (PED Directive).

Type-dependent settings

Flow value	Predefined according to EN 1434/OIML R 75/MID
Approval	Country specific
Flow rate v_f	0.02 … 9 m/s (0.065 … 29.5 ft/s)
Output A	Preset: Forward pulses
Output B	Preset: Alarm
Pulse value A & B (depending on DN value)	Preset: See scheme – previous page Preset for SITRANS FUE950 or free selectable, depending on flow rate (Q_s)
Pulse width	Preset: 5 ms
Flow unit setup	Preset: m^3/h
Volume unit setup	Preset: m^3

Flowmeter Calibration and traceability

To ensure continuous accurate measurement, flowmeters must be calibrated. The calibration is conducted at Siemens flow facilities with traceable instruments referring directly to the physical unit of measurement according to the International System of Units (SI).

Therefore, the calibration certificate ensures recognition of the test results worldwide, including the US (NIST traceability). Siemens offers accredited calibrations assured to ISO 7025 in the flow range from 0.0001 m^3/h to 10 000 m^3/h. Siemens Flow Instruments accredited laboratories are recognized by ILAC MRA (International Laboratory Accreditation Corporation - Mutual Recognition Arrangement) ensuring international traceability and recognition of the test results worldwide.

A standard calibration certificate with Q_n as selected flow is shipped with each SITRANS FUE380. This production calibration protocol consists of 2 x 3 points at Q_i, 10% Q_p and Q_p (max. 4 200 m^3/h).

Typical accuracy SITRANS FUE380:

$\pm (0.5 + 0.02\ Q_p/Q)$ [%]
Q_p according to EN 1434/OIML requirements.

Example: DN 100, Q_p = 60 m^3/h at Q = 1.2 m^3/h:
Accuracy at 1.2 m^3/h = typical 1.5 %

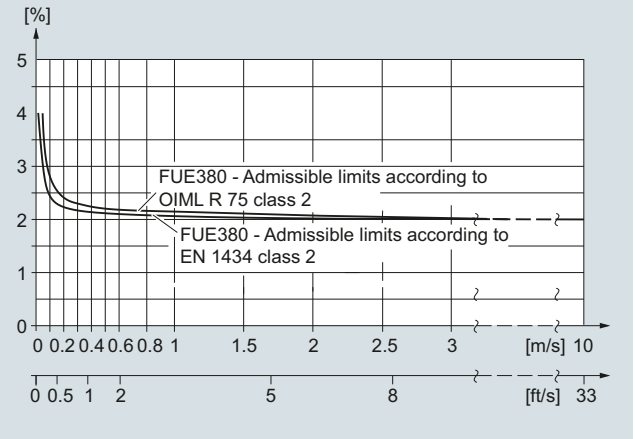

SITRANS FUE380 fulfils the requirements
$E_f = \pm (2 + 0.02\ Q_p/Q_i)$ max. ± 5 %, according to EN 1434 and OIML R 75, class 2 or MID requirements.

© Siemens 2021

Selection and ordering data

Flowmeter SITRANS FUS380 (type-approved) ↗ **7ME3410-** 0 - Ord. Code

↗Click on the Article No. for the online configuration in the PIA Life Cycle Portal.

Diameter	Approval	Pressure rating	Flow setting [m^3/h] Q_p (Q_n) is the normal flow according to the approval requirements. Q_p and Q_s is shown on the system label.		Article No.
			Q_p (Q_n)	**Q_s**	
Pipe material: Die-cast bronze					
DN 50 (2")		PN 40	15	30	1 B
DN 50 (2")		PN 40	15	45	1 C
DN 50 (2")	EN 1434	PN 40	30	45	1 D
DN 65 (2½")		PN 40	25	50	1 F
DN 65 (2½")		PN 40	25	72	1 G
DN 65 (2½")	EN 1434	PN 40	50	72	1 H
DN 80 (3")		PN 40	40	80	1 K
DN 80 (3")		PN 40	40	120	1 L
DN 80 (3")	EN 1434	PN 40	80	120	1 M
Pipe material: Carbon steel					
DN 100 (4")		PN 16, PN 40	60	120	1 P
DN 100 (4")		PN 16, PN 40	60	180	1 Q
DN 100 (4")	EN 1434	PN 16, PN 40	120	180	1 R
DN 125 (5")		PN 16, PN 40	100	200	1 T
DN 125 (5")		PN 16, PN 40	100	280	1 U
DN 125 (5")	EN 1434	PN 16, PN 40	200	280	1 V
DN 150 (6")		PN 16, PN 40	150	300	2 B
DN 150 (6")		PN 16, PN 40	150	420	2 C
DN 150 (6")	EN 1434	PN 16, PN 40	300	420	2 D
DN 200 (8")		PN 16, PN 25, PN 40	250	500	2 F
DN 200 (8")		PN 16, PN 25, PN 40	250	700	2 G
DN 200 (8")	EN 1434	PN 16, PN 25, PN 40	500	700	2 H
DN 250 (10")		PN 16, PN 25, PN 40	400	800	2 K
DN 250 (10")		PN 16, PN 25, PN 40	400	1120	2 L
DN 250 (10")	EN 1434	PN 16, PN 25, PN 40	800	1120	2 M
DN 300 (12")		PN 16, PN 25	560	1120	2 P
DN 300 (12")		PN 16, PN 25	560	1560	2 Q
DN 300 (12")	EN 1434	PN 16, PN 25	1120	1560	2 R
DN 350 (14")		PN 16, PN 25	750	1500	2 T
DN 350 (14")		PN 16, PN 25	750	2100	2 U
DN 350 (14")	EN 1434	PN 16, PN 25	1500	2100	2 V
DN 400 (16")		PN 16, PN 25	950	1900	3 B
DN 400 (16")		PN 16, PN 25	950	2660	3 C
DN 400 (16")	EN 1434	PN 16, PN 25	1900	2660	3 D
DN 500 (20")		PN 16, PN 25	1475	2950	3 K
DN 500 (20")		PN 16, PN 25	1475	4130	3 L
DN 500 (20")	EN 1434	PN 16, PN 25	2950	4130	3 M
DN 600 (24")		PN 16, PN 25	2150	4300	3 T
DN 600 (24")		PN 16, PN 25	2150	6020	3 U
DN 600 (24")	EN 1434	PN 16, PN 25	4300	6020	3 V
DN 700 (28")		PN 16, PN 25	2900	5800	4 F
DN 700 (28")		PN 16, PN 25	2900	8120	4 G
DN 700 (28")	EN 1434	PN 16, PN 25	5800	8120	4 H
DN 800 (32")		PN 16, PN 25	3800	7600	4 P
DN 800 (32")		PN 16, PN 25	3800	10640	4 Q
DN 800 (32")	EN 1434	PN 16, PN 25	7600	10640	4 R

© Siemens 2021

SITRANS FUE380 flowmeter with CT approval

Selection and ordering data

Article No.

Flowmeter SITRANS FUS380 (type-approved) — **7ME3410-** — Ord. Code

Diameter	**Approval**	**Pressure rating**	**Flow setting [m^3/h]** Q_p (Q_n)	**Flow setting [m^3/h]** Q_s	
Remote only					
DN 900 (36")		PN 16, PN 25	5000	10000	**5 B**
DN 900 (36")		PN 16, PN 25	5000	14000	**5 C**
DN 900 (36")	EN 1434	PN 16, PN 25	10000	14000	**5 D**
DN 1000 (40")	EN 1434	PN 16, PN 25	10000	14000	**5 M**
DN 1200 (48")	EN 1434	PN 16	10000	14000	**5 V**

Flange norm and pressure rating	
System without sensor - only a transmitter	
EN 1092-1	
• PN 16 (DN 100 ... 1200)	**C**
• PN 25 (DN 200 ... 1000)	**D**
• PN 40 (DN 50 ... 250)	**E**
Compact/remote connection	
Note: Sensor cable always firmly connected to connection box.	
Compact version, liquid max. 120 °C (248 °F)	
Remote version, liquid max. 150/200 °C (302/392 °F)	**0**
Sensor link cable (SSL)	
• 5 m (16.4 ft)	**2**
• 10 m (32.8 ft)	**3**
• 20 m (65.6 ft)	**4**
• 30 m (98.4 ft)	**5**
Approvals/pulse output	
Without approval (neutral)	**0**
With CT approval	**1**
With CT approval MID004, authority seal	**2**
Pulse output value setup	
To get optimal benefit of the pulses the pulse value and pulse length shall be selected as low as possible. The following calculation formula can be used for determining the shortest pulse value at a pulse length of 5 ms: L/pulse > Q_s (m^3/h) /360. For example Q_s = 300 m^3/h; L/pulse > 300/360; L/pulse > 0.83; therefore the pulse value must be 1 l/pulse	
Pulse value	
• 0.1 l/pulse	**1**
• 1 l/pulse	**2**
• 2.5 l/pulse	**3**
• 10 l/pulse	**4**
• 50 l/pulse	**5**
• 100 l/pulse	**6**
• 250 l/pulse	**7**
• 1 m^3/pulse	**8**
• 0.25 l/pulse	**9** **N 0 A**
• 0.5 l/pulse	**9** **N 0 B**
• 5 l/pulse	**9** **N 0 C**
• 25 l/pulse	**9** **N 0 D**
• 500 l/pulse	**9** **N 0 E**
• 2.5 m^3/pulse	**9** **N 0 F**
• 5 m^3/pulse	**9** **N 0 G**
• 10 m^3/pulse	**9** **N 0 H**
• 25 m^3/pulse	**9** **N 0 J**
• 50 m^3/pulse	**9** **N 0 K**
• 100 m^3/pulse	**9** **N 0 L**
• 250 m^3/pulse	**9** **N 0 M**
• 500 m^3/pulse	**9** **N 0 N**
• 1000 m^3/pulse	**9** **N 0 P**

© Siemens 2021

Selection and ordering data

	Article No.
Flowmeter SITRANS FUS380 (type-approved)	**7ME3410-** 0 - Ord. Code
Flowmeter SITRANS FUE080 power/analog output	
115 ... 230 V AC	B
3.6 V Lithium battery, dual pack is included	D
115 ... 230 V AC, backup 3.6 V DC Lithium battery, single pack is included	E
3.6 V battery version (no battery pack included)	G
Option with 4 ... 20 mA analog output module • 115 ... 230 V AC	R
• 115 ... 230 V AC, backup 3.6 V DC, Lithium battery, single pack is included	U
Note: Lithium batteries are subject to special transportation regulations according to United Nations "Regulation of Dangerous Goods, UN 3090 and UN 3091". Special transport documentation is required to observe these regulations. This may influence both transport time and costs.	
Country specific design	
Neutral, no approval mark	A
China, PA 2008-T222 C	C
Russia, EN 1434/OIML R75 M	M
MID-Approval (MI004), Language on name plate English	R
MID-Approval (MI004), Language on name plate German	S
MID-Approval (MI004), Language on name plate Polish	T
MID-Approval (MI004), Language on name plate French	U
Pulse width setup	
Pulse width • 5 ms (standard)	2
• 10 ms	3
• 20 ms	4
• 50 ms	5
• 100 ms	6
• 200 ms	7
• 500 ms	8

Additional information Please add "**-Z**" to Article No. and specify Order code(s) and plain text.	Order code
Calibration/certificate FUS380	
Production calibration for DN 50 ... 1200 with Q_n as selected in diameter. Incl. Calibration protocol: 2 x 3 points, Q_i, 10 % Q_p and Q_p (max. 8000 m^3/h).	**Included**
Accredited Siemens ISO/IEC 17025 calibration for DN 50 ... 200 with Q_n as selected in diameter. Certificate: 2 x 5 points, Q_i, 5 %, 10 %, 50 % and 100 % of Q_p (max. 630 m^3/h).	**D20**
Accredited Siemens ISO/IEC 17025 calibration for DN 250 ... 600 with Q_n as selected in diameter. Certificate: 2 x 5 points, 5 %, 10 %, 50 % and 100 % of Q_p (max. 2800 m^3/h).	**D21**
Accredited Siemens ISO/IEC 17025 calibration, DN 500 ... 1200 with Q_n as selected in diameter. Certificate: 2 x 5 points, Q_i, 5 %, 10 %, 50 % and 100 % of Q_p (max. 8000 m^3/h).	**D22**
Output B as reverse flow pulses. No calibration/verification of this function.	**E21**
Material certificate	
EN 10204-3.1 (pipe material)	**C12**
Tag name plate	
Stainless steel TAG plate (1 x 24 x 80 mm), wire fixed. Font size depends on text length: 8 mm for 1 ... 10 characters, 4 mm for 11 ... 20 characters (specify in plain text).	**Y17**

Please use online Product selector to get latest updates:

http://www.pia-selector.automation.siemens.com

Flowmeter SITRANS FUE380 operating instructions, accessories and spare parts

Operating instructions

Description	Article No.
• English	**A5E00730100**
• German	**A5E00740611**

All literature is available to download for free, in a range of languages, at http://www.siemens.com/processinstrumentation/documentation

For accessories and spare parts see the section about FUS080/FUE080.

© Siemens 2021

SITRANS FUS380/FUE380 dimensional drawings and circuit diagrams

Dimensional drawings

Flowmeter SITRANS FUS380 and FUE380

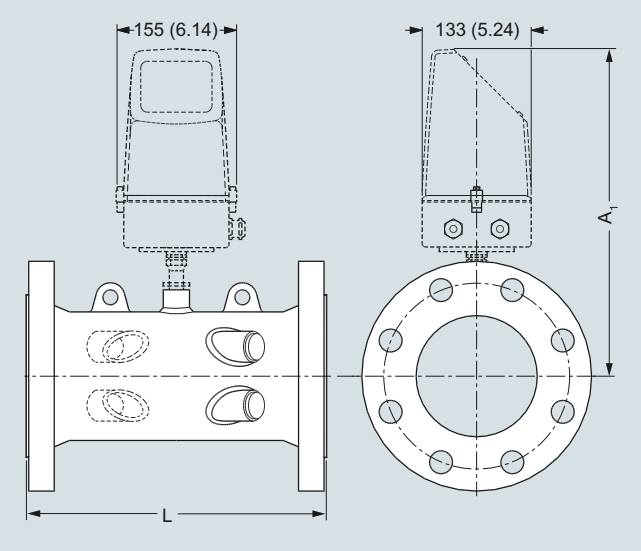

Transmitter IP67/NEMA 4X/6, wall mounting

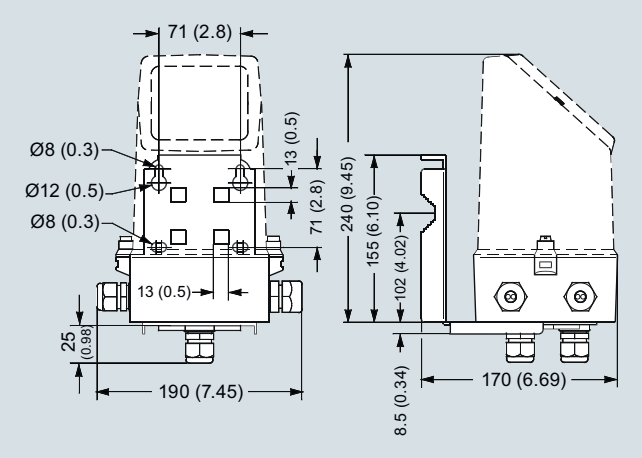

Dimensions in mm (inch)

Sensor dimensions for FUS380 and FUE380

Size	PN 16		PN 25		PN 40			
	L	Weight	L	Weight	L	Weight	A1	Lift hug
DN	mm	kg	mm	kg	mm	kg	mm	
50	-	-	-	-	300 +0/-2	10	350	No
65	-	-	-	-	300 +0/-2	15	363	No
80	-	-	-	-	350 +0/-2	18	370	No
100	350 +0/-2	15	-	-	350 +0/-2	18	372	No
125	350 +0/-2	18	-	-	350 +0/-2	24	385	No
150	500 +0/-3	28	-	-	500 +0/-3	34	399	No
200	500 +0/-3	38	500 +0/-3	47	500 +0/-3	55	425	Yes
250	600 +0/-3	60	600 +0/-3	76	600 +0/-3	91	452	Yes
300	500 +0/-3	66	500 +0/-3	81	-	-	478	Yes
350	550 +0/-3	94	550 +0/-3	121	-	-	495	Yes
400	600 +0/-3	124	600 +0/-3	153	-	-	520	Yes
500	625 +0/-3	194	625 +0/-3	231	-	-	570	Yes
600	750 +0/-3	303	750 +0/-3	365	-	-	622	Yes
700	875 +0/-3	361	875 +0/-3	553	-	-	673	Yes
800	1000 +0/-3	494	1000 +0/-3	770	-	-	724	Yes
900	1230 +0/-6	535	1300 +0/-6	835	-	-	775	Yes
1000	1300 +0/-6	594	1370 +0/-6	1000	-	-	826	Yes
1200	1360 +0/-6	732	-	-	-	-	928	Yes

Notes:

- Weight for transmitter/electronics 1.5 kg (compact version) or approximately 3 kg (remote version including 10 m cable set)
- Means not available
- All weights are **approximate**
- For flange values - see norm EN 1092-1

© Siemens 2021

Dimensional drawings (continued)

Size	PN 16		PN 25		PN 40			
	L	Weight	L	Weight	L	Weight	A1	Lift hug
inch	inch	lb	inch	lb	inch	lb	inch	
2	-	-	-	-	11.81 +0/-0.08	22	13.78	No
2½	-	-	-	-	11.81 +0/-0.08	33	14.30	No
3	-	-	-	-	13.78 +0/-0.08	40	14.57	No
4	13.78 +0/-0.08	33	-	-	13.78 +0/-0.08	40	14.65	No
5	13.78 +0/-0.08	40	-	-	13.78 +0/-0.08	53	15.16	No
6	19.68 +0/-0.12	62	-	-	19.68 +0/-0.12	75	15.71	No
8	19.68 +0/-0.12	84	19.68 +0/-0.12	104	19.68 +0/-0.12	121	16.74	Yes
10	23.62 +0/-0.12	132	23.62 +0/-0.12	168	23.62 +0/-0.12	201	17.80	Yes
12	19.68 +0/-0.12	146	19.68 +0/-0.12	179	-	-	18.82	Yes
14	21.65 +0/-0.12	207	21.65 +0/-0.12	267	-	-	19.49	Yes
16	23.62 +0/-0.12	273	23.62 +0/-0.12	337	-	-	20.48	Yes
20	24.61 +0/-0.12	428	24.61 +0/-0.12	509	-	-	22.45	Yes
24	29.53 +0/-0.12	668	29.53 +0/-0.12	805	-	-	24.49	Yes
28	34.45 +0/-0.12	796	34.45 +0/-0.12	1246	-	-	26.50	Yes
32	39.37 +0/-0.12	1089	39.37 +0/-0.12	1698	-	-	28.51	Yes
36	48.43 +0/-0.24	1179	51.18 +0/-0.24	1841	-	-	30.52	Yes
40	51.18 +0/-0.24	1310	53.94 +0/-0.24	2205	-	-	32.52	Yes
48	53.34 +0/-0.24	1614	-	-	-	-	36.54	Yes

Notes:

- Weight for transmitter/electronics 3.3 lb (compact version) or approximately 6.6 lb (remote version including 32.8 ft cable set)
- Means not available
- All weights are **approximate**
- For flange values - see norm EN 1092-1

© Siemens 2021

3

Circuit diagrams

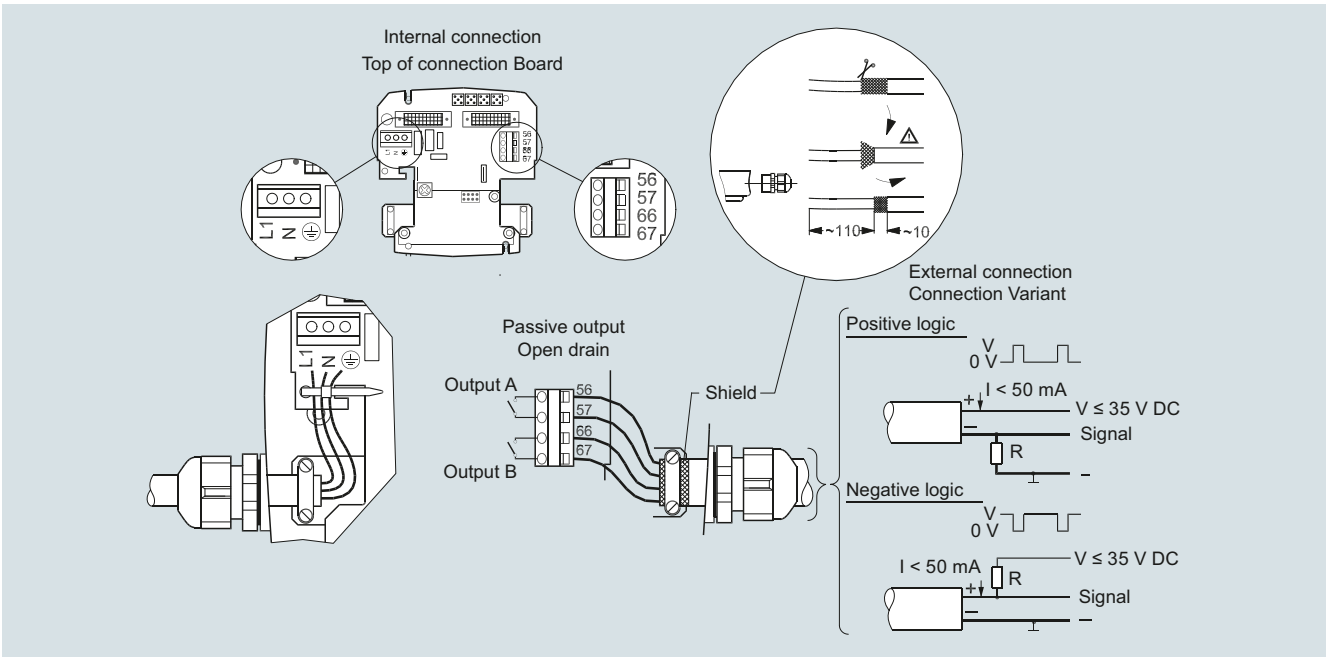

Electrical connection of transmitter SITRANS FUS380 and FUE380

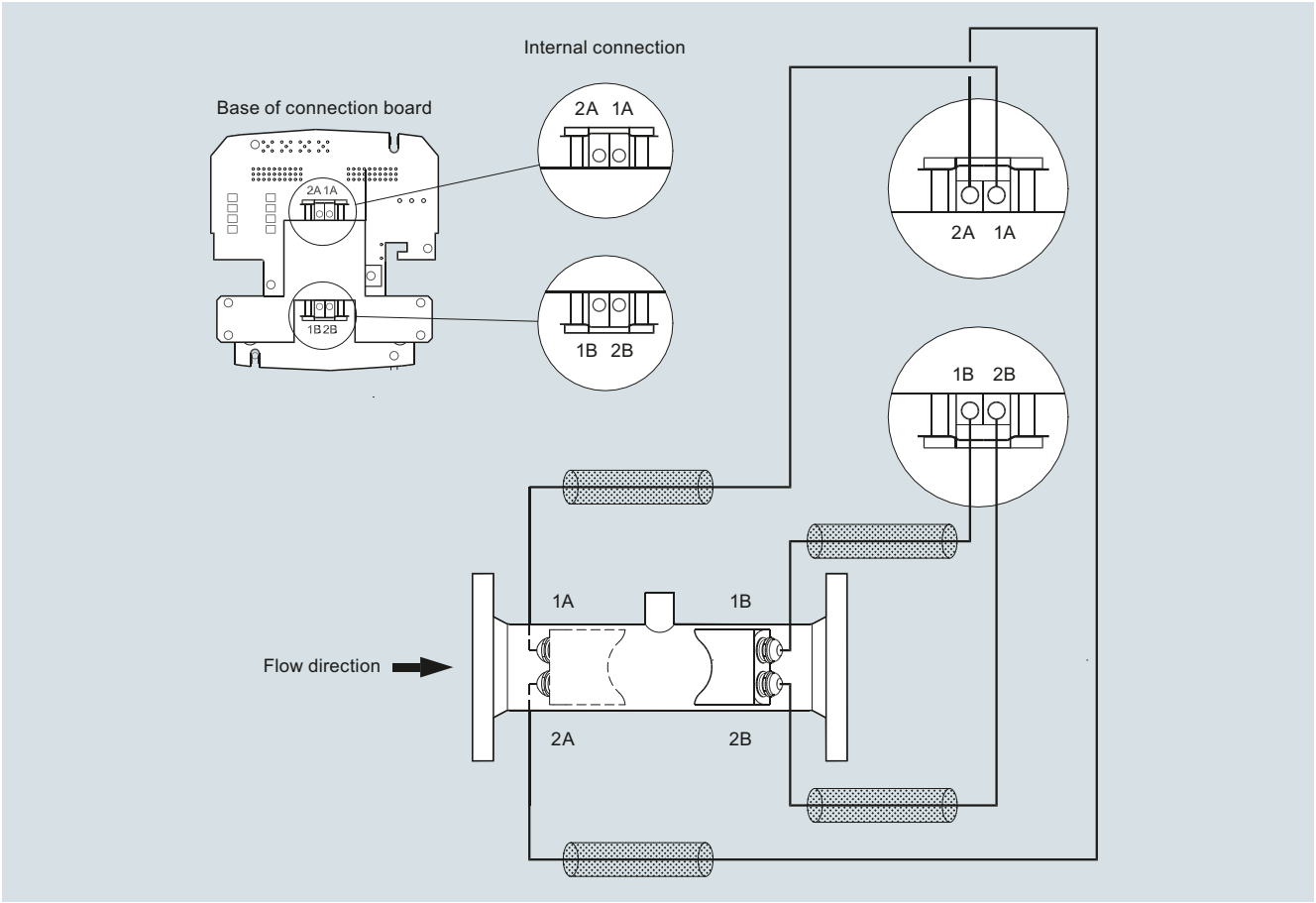

Electrical connection of sensor SITRANS FUS380 and FUE380

© Siemens 2021

Overview



SITRANS FUE950 is a universal thermal energy calculator, which meets the requirements EN 1434 and has the MID and PTB K7.2 approval for energy metering with the media water.

SITRANS FUE950 has been developed for the SITRANS FUS380/FUE380 and alternatively MAG 5000/6000 or FST020. SITRANS FUE950 is modular in construction and can by order be fitted with optional modules depending on the application. The FUE950 supports none of the SITRANS FX, FC products and only some of the FUS clamp-on products.

Benefits

Basic functions

- Prepared for heating, cooling measurement
- Approval for MID for heat metering and PTB K7.2 for cooling
- High-accuracy thermal energy metering, meets EN 1434 requirements
- Measured temperature range -20 … +190 °C (-4 … +374 °F)
- Instantaneous values for energy/volume flow
- Battery or mains powered
- Battery version with battery lifetime of typically up to 10 years
- Optical data interface
- Real date and time
- Auto-detection of 2-wire or 4-wire temperature sensors

Additional functions

- Individual tariff functions
- Advanced functions for cooling/heating applications or the combination
- Memory for 24 periods (months, weeks, days)
- Data logger function
- Expandable functionality with 2 optional plug and play add-on modules
- Communication over M-Bus, RS 485 or RS 232

Add-on modules

- Plug-in module with 2 extra pulse inputs
- Plug-in module with 2 pulse outputs
- Plug-in module with combination of input and output pulses
- Plug-in module for M-Bus communication
- Plug-in module for RS 232 or RS 485 communication
- Plug-in module with 2 passive current outputs (4 ... 20 mA)

Application

The SITRANS FUE950 is able to handle 3 kinds of applications, means energy calculation in:

- District heating applications
- Chilled water applications
- Combined cooling/heating applications

Energy metering in heating, hot water applications (code "A" and "B")

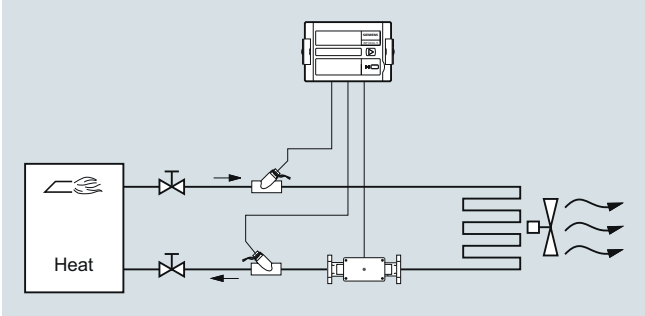

Energy metering in cooling, chilled water applications (code "C" and "D")

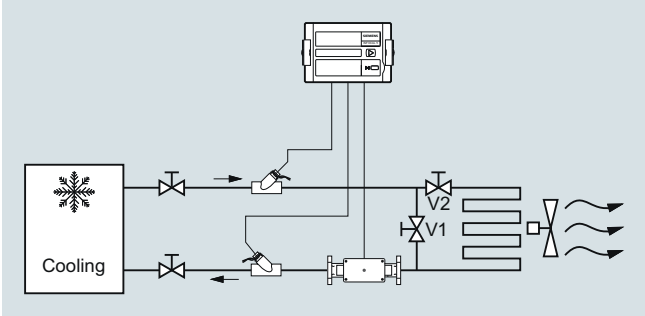

Energy metering in combined cooling/heating applications (code "E" and "F")

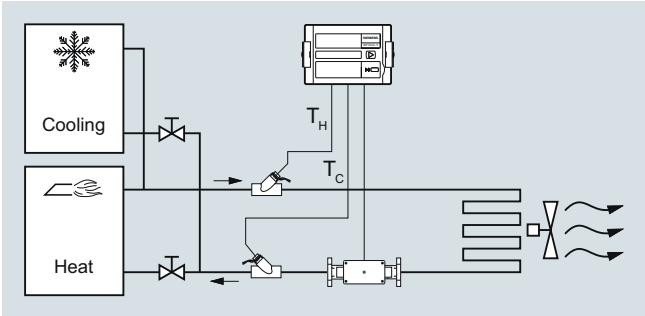

© Siemens 2021

SITRANS FUE950 energy calculator

Design

SITRANS FUE950 has an easy-read 8-digit LCD display with associated pictograms for the various functions. As the display has been made for several applications, some figures/symbols not used for normal district heating applications will be shown.

SITRANS FUE950 has a push button for simple operation and provides user-friendly control via the various display menu loops. The display will always be configured for the application chosen, and for the selected display settings.

The integrator has an IP54 plastic housing and is designed for wall or panel mounting. The housing comes with prepared rubber gaskets cable entries for fast and easy installation.

Operation menu loop structure

The FUE950 display has six menu loops and the menus are numbered in the display from 1 to 6. Some display menus consist of two values (to maximum seven) that are shown alternately at 4-second intervals.

The main menu loop no. 1 with the current data, e.g. for energy, volume, flow rate and temperature, is preprogrammed as default setting.

In the combined heating/cooling configuration the menu loop no. 5 (tariff menu loop) will be activated additionally.

Displays and output pulses

Units: MWh, GJ, Gcal, MBtu, m^3, gal, m^3/h, GPM, °C, °F and kW; all decimal points are statically (the unit "gal" is shown with factor x 100).

The display unit and the last fractional digit are typical used for the pulse outputs.

Function

Technical principle

Calculation of energy is based on the following formula:

Energy = Volume x (T_{Hot} - T_{Cold}) x K_{factor} (T_i)

Volume: Volume [m^3] of a given amount of volume pulses

T_{Hot}: Measured temperature in the hot line

T_{Cold}: Measured temperature in the cold line

K_{factor} (T_i): Thermal coefficient of media enthalpy and heat content

The energy calculation is made by a counter and depends on temperature difference, pulse input frequency and legal requirements.

The calculator always carries out at least one energy calculation every 2 seconds. If the connected flowmeter has not sent enough pulses the energy calculation and flow indication is also based on the 8 seconds value.

Data memory

The FUE950 has a history memory of 24 periods (months, weeks, days). The following values are stored monthly, weekly or daily in the EEPROM on the programmed day of 1…31 (via software tool).

- Date/Time
- Energy
- Tariff energy 1
- Tariff energy 2
- Tariff definition 1
- Tariff definition 2
- Pulse counter input 1
- Operation hours
- Volume
- Error day counter
- Maximum monthly flow rate
- Maximum monthly power
- Date of maximum monthly flow rate
- Date of maximum monthly power
- Pulse counter input 2

Data logger memory (LOG)

The LOG of the calculator is stored every 24 hours with all cumulative values in the EEPROM. The storage frequency can be selected from various storage intervals (5, 6, 10, 12, 15, 20, 30, 60 minutes or the default setting of 24 hours). The data which are stored in the LOG could be read out using a software tool and can be used for evaluations.

Extract of possible LOG settings

Storage interval	Values	Number of data records	Recording period
5 minutes	• Error status • Overload time temperature • Overload time flow rate • Forward temperature • Return temperature • Date and time • Energy • Tariff energy 1 • Tariff energy 2 • Tariff definition 1 • Tariff definition 2 • Volume • Error day counter	440	36.6 hours
15 minutes		440	110 hours
1 hour		440	18.3 days
24 hours (default setting)		440	440 days

Maximal Values

The integrator creates max. values for power and flow rate based on consumption time, which are stored in the EEPROM. The integration intervals are adjustable to 6, 15, 30 or 60 minutes and 24 h. Default setting is 60 minutes.

Tariff/Accounting date function

The calculator includes two independent memories in which the accumulated energy at two programmable tariff dates are stored.

- Last accounting date
- Last but one accounting date

Values stored

- Energy
- Volume
- Tariff counter 1
- Tariff counter 2
- Pulse counter 1
- Pulse counter 2
- Date

The integrator offers two optional tariff memories for monitoring plant load states. Here it concerns threshold value tariffs. Extensive tariff conditions make it possible to adapt the calculator individually to the required customer-specific applications.

Both tariffs are separately configurable and independent from each other. Energy or time can be measured alternatively per tariff register dependent on the tariff mode adjusted in each case.

With the "time triggered tariff function" the switch-on time and the switch-off time are adjustable independent from each other for each day of the week in steps of 15 minutes.

© Siemens 2021

Function (continued)

The following tariff limit types of the tariff are possible:
(This example applies to the display at 3 fractional digits after comma)

Type	Description	Limit	Limit resolution
dT	Temperature difference	1 … 190 °C	1 °C
-dT	Negative temperature difference	1 … 190 °C	1 °C
TR	Return temperature (low)	1 … 190 °C	1 °C
TV	Forward temperature (high)	1 … 190 °C	1 °C
P	Power	10 … 2500 kW	10 kW
Q	Flow	1 … 255 m^3/h	1 m^3/h
FE	"Theoretically forward energy" with return temperature of 0 °C		
Z	"Time triggered" counting energy		
E	"External" counting energy		

Error handling and memory

Events such as changes and faults are stored in a non-volatile memory with a capacity of up to 127 entries. The following events are recorded:

- Checksum error
- Temperature measurement error
- Error hours
- Start and end of test mode

If SITRANS FUE950 records an error, this will be automatically indicated by a "alarm symbol" on the display.

To protect the reading data, all the relevant data are saved in a non-volatile memory (EEPROM). This memory saves the measured values, device parameters and types of error at regular intervals.

The following events are recorded:

- Temperature sensor error
- Swapped hot and cold temperature sensors
- Battery low warning
- Power supply failure
- Optical communication warning
- RAM checksum error

Outputs/Inputs/Communication

Communication interfaces:

SITRANS FUE950 is fitted with an optical infra-red send/receive port in accordance with EN 1434/IEC 61107, protocol standard, EN 1434/EN 60870-3 (M-Bus protocol).

A specific optical head with a permanent magnet (IrDA-adapter) in accordance with EN 1434 can be used for readout data or communication with the parameterization software.

2 ports for optionally plug-in modules

The calculator features 2 ports for the plug-in modules.

One slot is for the function modules and the other for the communication modules.

Communication modules

The following communication modules are available as options: RS 232 module, RS 485 module and M-Bus module. The RS 232 and RS 485 communication modules are serial interfaces and permit data exchange with the calculator. For this purpose a special data cable is necessary.

The M-Bus module is a serial interface for communication with external devices (M-Bus Master/Centre). According to the M-Bus structure a number of calculators can be connected to a control centre.

Pulse input module

Two pulse inputs are available. The pulse value and the unit is configurable for energy, water, gas or electrical meter by parameterization software. Data are separate cumulated in different registers and are also stored on the two accounting day's (Tariff registers).

Combined pulse Input/Output module

Two pulse inputs combined with one pulse output are available on one module. The pulse inputs are configurable with value and the unit by parameterization software.

The pulse output is also programmable using the parameterization software.

Pulse output

The calculator provides levels for two optional external pulse outputs, which can be freely programmed using the parameterization software tool.

Default setting is one pulse which occurs per change in the least significant digit in the display with the unit and resolution selected by the device ordering.

Possible pulse output values

- Energy (default setting)
- Volume (default setting)
- Tariff energy 1
- Tariff energy 2
- Tariff condition 1, limit switch
- Tariff condition 2, limit switch
- Energy error
- Volume error
- Volume with specific resolution (0.1, 1.0, 10 or 100)
- Energy with specific resolution (0.1, 1.0, 10 or 100)

Combined current output module

Optional module with 2 passive 4 ... 20 mA outputs.

Possible output values:

- Power (default setting for output #1)
- Flow (default setting for output #2)
- Hot, cold or difference temperature

The settings can be configured by parameterization software. The current output module occupies both ports, means no other plug-in module will possible to plug in.

Module combinations

The calculator has a group of extension modules for communication and another group of extension modules for additional functionality. These modules are available first selected within the calculator, or for retrofitting in the field.

One single function module as well as one single communication module out of following modules is selectable.

Function modules:

- Pulse input module, 2 inputs
- Pulse output module, 2 outputs
- Combined pulse module 2 inputs, 1 output
- Combined current output module, 2 x passive 4 ... 20 mA (occupies both ports)

Communication modules:

- M-Bus (M-Bus protocol according EN 1434-3)
- RS 232 (M-Bus protocol according EN 1434-3)
- RS 485 (M-Bus protocol according EN 1434-3)

© Siemens 2021

SITRANS FUE950 energy calculator

Integration

SITRANS FUE950 is a multi-purpose energy calculator for media water which meets the requirements of EN 1434. Further, the energy calculator has been specially developed to process volume pulses from SITRANS FUS380/FUE380 or alternatively MAG 5000/6000 or FST020 transmitter.

Technical specifications

Approval	MID approved in accordance with energy meter EN 1434 and PTB K7.2 (German national cooling approval)
Approved temperature range	
• Heating	0 … 180 °C (32 … 356 °F)
• Cooling	0 … 105 °C (32 … 221 °F)
Absolute temperature range	-20 … +190 °C (-4 … -374 °F)
Differential temperature	
• Heating	3 … 177 K (starting at 0.1 K)
• Cooling	3 … 102 K
Measuring accuracy	Meets requirements of EN 1434 Typically max. ± (0.5 + 3 K/Δθ) [%] of measured value
Measuring rates	
• Battery type D-cell	Volume: 1 s, temperature: 4 s
• Mains versions	Volume: 1/8 s, temperature: 2 s
Flow range	Depends on pulse input value (IN0), see “Selection and Ordering data”
Power range value	Depends on pulse input value as follows:
Pulste input value (I/P or gal/P)	Max power [kW]
1	15000
2.5	15000
5	15000
10	150000
25	150000
50	150000
100	1500000
250 *)	1500000
500 *)	1500000
1000 *)	15000000

*) not available for gal/pulse

Typical accuracy of FUE950

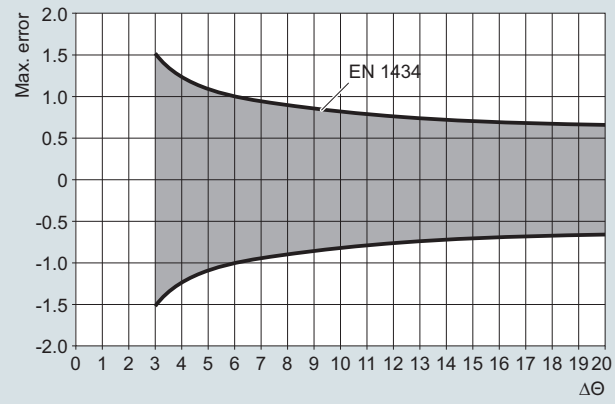

User interface (always included)	
Display	8-digit LCD display with associated pictograms/symbols
Units	MWh, GJ, Gcal, MBtu, m^3, m^3/h, GPM, gal, °C, °F, kW, MBtu/h (gal is shown with factor x 100)
Totalizer value range	99 999 999 or 9 999 999.9 (0 and 1 digit after comma). Display digits: Flow in 6 digits; Volume, power and energy in 8 digits
Values	Power, energy, volume, flow rate, temperatures
Push button	Single push button for the menu controlling
Optical interface IrDA interface	ZVEI optical interface with M-Bus protocol as per EN 1434, connection via separate IrDA-adapter baud rate: 300 or 2400
Rated operation conditions	
Enclosure	IP54 in accordance with IEC 529
Material	
• Housing	C Lexan 141R (or similar); colors: light gray (top part) and black (bottom part)
• Pipe/wall fitting	PA 6,6 GF25 (or similar)
• Other plastic parts	ABS Cycolac GPM500 (or similar)
• Gaskets	Neoprene and rubber cable bushings: EPDM 50
• Rubber cable bushings	EPDM 50
Temperature	
• Ambient	5 … 55 °C (41 … 131 °F)
• Storage	-25 … +70 °C (-13 … +158 °F) Relative ambient humidity < 93 %
Environment class	
• Mechanic class	M1/M2
• Electromagnetis class	E1/E2 (MID) or C (DIN EN 1434)
Temperature input (always included)	
Function	The temperature sensors must be connected to terminals 1-5 and 6-2 (T_H) and 3-7 and 8-4 (T_C) depending on cable type (2-wire or 4-wire).
Temperature range Absolute measuring range	-20 … 190 °C (-4 … 374 °F) for T_H and T_C
Temperature difference	Start 0.1 K, min. 3 K, max. 177 K
Measurement cut-off	0.125 K
Display resolution	T_H and T_C: 0.1 K ΔT: 0.1 K 16-bit digital resolution AD converter
Sensor types	Pt100 or Pt500 as 2-wire or 4-wire; Standard is Pt500. Sensor cable length: up to 10 m (according EN 1434 and MID-type approval).
Sensor connection	4-wire or 2-wire; auto detection of connection version

© Siemens 2021

Technical specifications (continued)

Flow input (IN0) (always included)	
Function	Used as standard for flow input of the external flowmeter. The input is marked as 10 (+ Flow Pulse), 11 (- Gnd) on the terminal strip. Note: The pulse input value selection must be the same as the pulse output setting of the flowmeter.
Pulse value	1 … 1000 l/pulse or 1 … 100 gal/pulse, selection by corresponding order code. Will be shown at the device label
Pulse frequency	≤ 100 Hz (200 Hz)
Pulse ON-time	≥ 3 ms
Pulse OFF-time	≥ 2 ms
Type	Active pulse input
Terminal voltage	3.6 V DC (supplied internally by FUE950)
Flowmeter installation place	The flowmeter installation place can be in the hot line or cold line ("forward or return pipe") selected by corresponding order code. The "installation place" will be shown at the device display and nameplate
Connected cable	Max. 10 m (shielded cables are highly recommended)
Ports for option modules	
Type	The calculator features 2 ports for optional plug-in modules.
Function modules (Port 1 or 2)	• Pulse input module, 2 inputs (In1, In2) • Pulse output module, 2 outputs (Out1, Out2) • Combination module of 2 inputs (In1, In2) and 1 output (Out1)
Current output module (Port 1)	2 passive 4 ... 20 mA (#1, #2) (occupies both port 1 and 2)
Communication modules (Port 1 or 2)	M-Bus, RS 232 or RS 485 (M-Bus protocol, according EN 1434-3)
Pulse output	
Function	The module contains connections for 2 pulse outputs, which can be programmed as desired using a software tool. The pulse outputs are marked as standard as O1, 'gnd' and O2, 'gnd' on the terminal strip and Out1 respectively Out2 in the display.
Type	Passive "open collector" pulse output, outputs potential isolated to each other
Pulse value	Last significant digits of the display (unit/pulse), selection by corresponding order code and setting can be read via display menu, settings changeable via software tool

Pulse output 1	
• Pulse frequency	≤ 4 Hz
• Pulse width	125 ms ± 10 %
• Pulse duration	125 ms ± 10 %
• Pulse break	≥ 125 ms -10 %
Pulse output 2	
• Pulse frequency	≤ 100 Hz, depending on the selected pulse length
• Ratio	Pulse duration/pulse break ~ 1:1
Pulse length	5, 10, 50, 100 ms (default: 5 ms)
External voltage supply	3 … 30 V DC
Current	≤ 20 mA with a residual voltage of ≤ 0.5 V
Possible pulse output selection	• Energy (default setting for 'Out1') • Volume (default setting for 'Out2') • Tariff energy 1 • Tariff energy 2 • Tariff condition 1 (limit switch) • Tariff condition 2 (limit switch) • Energy error • Volume error • Volume with specific display resolution (or with factor 0,1, 10 or 100 thereof) • Energy with specific display resolution (or factor 0.1 thereof)
Pulse input	
Function	Add-on module for two additional counters. The pulse input 1 is marked as I1, 'gnd' and the input 2 as I2, 'gnd' on the terminal strip and indicated in the display as separate registers IN1 and IN2 and can also be transferred via the communication modules.
Type	Passive "open collector" pulse inputs, outputs not potential isolated to each other, data are separate cumulated in different registers and are also stored on the two accounting day's.
Pulse value	Pulse value and the unit are configurable for energy, water, gas or electrical meter by a software tool Default: Pulse input 0.1 m3 or 1 gal (if unit 'gal' is ordered with the Z-option "L05")
Pulse frequency	≤ 8 Hz
Pulse length	≥ 10 ms
External voltage supply	3 V DC (supplied internally by FUE950)
Current	based on R_i = 2.2 MΩ
Cable length	< 10 m connection limit

© Siemens 2021

Technical specifications (continued)

Current output module	
Function	The module contains connections for 2 passive current outputs, which can be programmed individually using the software tool. The outputs are marked „#1“ and „#2“ with corresponding polarity „+“ and „-“ on the terminal strip.
	The module will be connected on port 1 only, but both ports are occupied by the module.
Terminal voltage	External supply: 10 … 30 V DC (passive output)
Signal range	4 … 20 mA; 4 mA = 0 value and 20 mA = default maximum values (for #1: Power in kW and for #2: Flow with the max. values and selected unit).
	Defaults:
	For power it is the max. selectable value x 100 000 the last digit of display (e. g. 20 mA = 10 000.0 kW (1 digit res.) or 100 000 kW (0 digit res).
	For flow it is the max. selectable value x 10 000 the last digit of display (e. g. 20 mA = 1 000.0 m^3/h (1 digit res.) or 10 000 m^3/h (0 digit res.).
Load	Max. 800 Ω
Upper limit	Up to 20.5 mA (exceed causes the error current value)
Signal on alarm	Errors are indicated with 3.5 mA or 22.6 mA (programmable, default: 3.5 mA)
Output values	Power, flow, temperature (configuring via software tool; default: for #1: Power and for #2: Flow)
M-Bus output	
Type	The optional M-Bus plug-in module is a serial interface for communication with external devices (M-Bus Repeater)
Protocol	M-Bus according EN 1434-3
Connection	The connection is not polarity-conscious and is electrically isolated, connection of 2 x max. 2.5 mm^2 wires, 300 or 2400 baud (auto baud detection), current drawn: one M-Bus load.
	M-Bus address: Each port has its own primary M-Bus address (Prim1 = the last two digits of the serial number; Prim2 = 0).
	The secondary address is unique for each calculator and is factory-set to equal the serial number.
RS 232 output	
Type	The optional module RS 232 is a serial interface for data transmission with external devices, e.g. PC; baud rate: 300 or 2400. The module contains a 3-pole terminal strip with terminals marked 62 (TX), 63 (RX) and 64 (GND). For this purpose a special data cable is necessary.
Protocol	M-Bus according EN 1434-3
Connection	The module contains a 3-pole terminal strip with terminals marked 62, 63, 64 (max. 2.5 mm^2); Connected cable length: max 10 m;
	For communication with a PC a special adapter cable is required (order no. A5E02611774).

RS 485 output	
Function	The optional RS 485 module is a serial interface for data transmission with external devices, e.g. PC; baud rate: 2400. The module contains a 4-pole terminal strip with terminals marked D+, D-, Vcc and GND.
Protocol	M-Bus protocol according EN 1434-3
Connection	Terminals D+ and D-; electrically isolated; 2400 baud only.
	An external supply of 12 V DC ± 5 V (<5 W) is needed for the module (terminals Vcc and GND). The module terminals are max. for 2.5 mm^2 wires. Connected cable length: max. 10 m
Power consumption	
230 V and 24 V versions	Typical current appr. 0.15 VA
3.6 V D-cell battery	Typical battery lifetime 10 years under normal conditions (no add-on modules, max. 40 °C ambient temperature)
Supply data	Internal voltage 3.6 V by the battery or plug-in power supply module
Battery, 3.6 V type (option)	3.6 V lithium D-cell, battery lifetime typically 16 years with independently powered flowmeter
230 V AC module (option)	Plug-in module for 230 V AC (195 ... 253 V AC), 50/60 Hz (incl. battery backup)
24 V AC module (option)	Plug-in module for 24 V AC (12 ... 30 V AC) (incl. battery backup)
Battery backup (option)	Only with mains supply modules by internal 3.0 V lithium battery (type CR 2032) Displayed values, date and time are still updated, but the measuring functions have stopped, including the flow rate measurement. Communication via optional modules M-Bus, RS 485, RS 232 or optical interface is maintained, affecting the backup battery lifetime.

Accessories/Software

The parameterization software based on the M-Bus is a convenient tool for handling the calculator. It runs on Windows and is used for configuration of the calculator functionality, reading out different memories, printing out calculator logs. For further details please contact your local Siemens representative.

A specific optical head with a permanent magnet in (IrDA adapter with bluetooth) accordance with EN 1434 can be used for programming/altering programming of readout data, configuration data, etc. The reader head can also be used to change measuring data.

© Siemens 2021

Selection and ordering data

Article No. **7ME3480-** _ _ _ _ _ - _ _ _ _

Energy calculator SITRANS FUE950, MID or PTB K7.2 custody transfer approved ↗

↗ Click on the Article No. for the online configuration in the PIA Life Cycle Portal.

Flow input setting (IN0)

The pulse input value selection must be the same as the pulse output setting of the selected flowmeter. To get optimal function and performance the pulse value must be selected as low as possible according to the maximum flow rate.
The following calculation formula can be used for determining the lowest pulse value at a pulse length of 5 ms: L/pulse > Q_{max} (m^3/h)/360.
For example Q_{max} = 300 m^3/h; L/pulse > 300/360; L/pulse > 0.83; therefore the pulse value must be 1 l/pulse.

Pulse input in l/pulse or in gal/pulse (with option L05)	Flow limit Q_{max} in m^3/h	Flow limit Q_{max} in GPM*) (with option L05)	
1	360	6000	2 A
2.5	900	15000	2 B
5	1800	30000	2 C
10	3600	60000	3 A
25	9000	150000	3 B
50	18000	300000	3 C
100	36000	600000	4 A
250	90000	-	4 B
500	180000	-	4 C
1000	360000	-	5 A

*) GPM = Gallons per minute

Calculator application/Flowmeter installation place

For heating, flowmeter in return pipe (cold pipe), typical standard	A
For heating, flowmeter in forward pipe (hot pipe)	B
For cooling, media water, flowmeter in forward pipe (cold pipe)	C
For cooling, media water, flowmeter in return pipe (hot pipe)	D
For combined cooling/heating, flowmeter in forward pipe (hot pipe as heating) (MID conformity declaration for heating)	E
For combined cooling/heating, flowmeter in return pipe (cold pipe as heating) (MID conformity declaration for heating)	F

Temperature sensor type

Pt500 setup, no sensor pair included (standard)	0
Pt500 setup and Pt500 sensor pair (6/140 mm), 4-wire with 5 m connection cable, 6 mm sensor diameter and 140 mm sensor length. MID approved DE-06-MI004-PTB011, PTB approved 22.77/09.01, incl. factory test report (mentioned approvals are only valid if temp. sensors are used with the applicable temperature sensor pockets)	3
Pt500 setup and Pt500 sensor pair (6/230 mm), 4-wire with 5 m connection cable, 6 mm sensor diameter and 230 mm sensor length. MID approved DE-06-MI004-PTB011, PTB approved 22.77/09.01, incl. factory test report (mentioned approvals are only valid if temp. sensors are used with the applicable temperature sensor pockets)	4
Pt100 setup, no sensor pair included	5
Pt 500 setup and PT500 sensor pair (6/50 mm), 2-wire type incl. 5 m cable, 6 mm sensor diameter and 50 mm length, with MID approval (only for use with the applicable temperature sensor pockets)	6
Pt 500 setup and PT500 sensor pair (6/50 mm), 2-wire type incl. 10 m cable, 6 mm sensor diameter and 50 mm length, with MID approval (only for use with the applicable temperature sensor pockets)	7

Article No. **7ME3480-** _ _ _ _ - _ _ _ _

Energy calculator SITRANS FUE950, MID or PTB K7.2 custody transfer approved

Temperature sensor pocket sets

for 6 mm sensor diameter	
No pockets (standard)	0
Brass pockets for 6 mm 2-wire sensors, length 82/92 mm, G½ inch, max. PN 16 (2 pcs.)	2
Stainless steel pocket, 120/135 mm length for 6 mm sensor diameter, max. PN 40 and max. 5 m/s (2 pcs. for 140 mm 4-wire sensors above)	5
Stainless steel pockets for 6 mm 2-wire sensors, length 117/127 mm, G½ inch, max. PN 25 (2 pcs.)	6
Stainless steel pocket, 210/225 mm length for 6 mm sensor diameter, max. PN 40 and max 5 m/s (2 pcs. for 230 mm 4-wire sensors above)	7
Stainless steel pockets for 6 mm 2-wire sensors, length 155/168 mm, G½ inch, max. PN 25 (2 pcs.)	8

Voltage supply

Battery 3.6 V DC (Litium D-cell type) (standard)	1
Mains power module for 230 V AC supply (incl. back-up battery)	2
Mains power module for 24 V AC supply (incl. back-up battery)	3
No power supply module (power supply ordering separate)	4

Option modules

No module (standard)	A
1 module (communication module)	
M-Bus module	B
RS 232 module (M-Bus protocol)	C
RS 485 module (M-Bus protocol)	D
1 module (function module)	
Pulse output, 2x output (Out1 "Energy" and Out2 "Volume")	E
Pulse input, 2x input (In1 and In2)	F
Pulse out-/input combination, 2x input and 1x output	G
Combination of 2 modules (communication and function module)	
M-Bus module and Pulse output, 2x output (Out1 "Energy" and Out2 "Volume")	H
M-Bus module and Pulse input, 2x input (In1 and In2)	J
M-Bus module and Pulse out/-input combination, 2x input and 1x output	K
RS 232 module (M-Bus) and Pulse output, 2x output (Out1 "Energy" and Out2 "Volume")	L
RS 232 module (M-Bus) and Pulse input, 2x input (In1 and In2)	M
RS 232 module (M-Bus) and Pulse out/-input combination, 2x input and 1x output	N
RS 485 module (M-Bus) and Pulse output, 2x output (Out1 "Energy" and Out2 "Volume")	P
RS 485 module (M-Bus) and Pulse input, 2x input (In1 and In2)	Q
RS 485 module (M-Bus) and Pulse out/-input combination, 2x input and 1x output	R
Combination current output module, 2x passive 4 ... 20 mA (Out 1 "Power", Out 2 "Flow") (occupies both module Ports 1 and 2)	S

© Siemens 2021

SITRANS FUE950 energy calculator

3

Selection and ordering data

	Article No.
Energy calculator SITRANS FUE950, MID or PTB K7.2 custody transfer approved	**7ME3480-** ■■■■■ - ■■■■
Display units and resolutions	
MWh & kW, m^3, m^3/h in 2 digit resolution; Temperature: no decimal figures	**C**
MWh & kW, m^3, m^3/h in 1 digit resolution; Temperature: no decimal figures	**D**
MWh & kW, m^3, m^3/h in 0 digit resolution; Temperature: no decimal figures	**E**
GJ & kW, m^3, m^3/h in 2 digit resolution; Temperature: no decimal figures	**H**
GJ & kW, m^3, m^3/h in 1 digit resolution; Temperature: no decimal figures	**J**
GJ & kW, m^3, m^3/h in 0 digit resolution; Temperature: no decimal figures	**K**
Gcal & kW, m^3, m^3/h in 2 digit resolution; Temperature: no decimal figures	**M**
Gcal & kW, m^3, m^3/h in 1 digit resolution; Temperature: no decimal figures	**N**
Gcal & kW, m^3, m^3/h in 0 digit resolution; Temperature: no decimal figures	**P**
MBTU & MBTU/h, m^3, m^3/h in 2 digit resolution; Temperature: no decimal figures	**Q**
MBTU & MBTU/h, m^3, m^3/h in 1 digit resolution; Temperature: no decimal figures	**R**
MBTU & MBTU/h, m^3, m^3/h in 0 digit resolution; Temperature: no decimal figures	**S**
Verification/Approval	
Without type approval mark, neutral label (standard)	**0**
With MID type approval mark (only for heating combinations, selection "A, B, E and F")	**1**
With MID approval mark and first MID verfication (only for heating, selection A, B, E and F")	**2**
Cooling approval mark, German national cooling approval according PTB-TR-K7.2 (only for cooling and media water, selection "C and D")	**7**
Cooling approval mark, German national cooling approval according PTB-TR-K7.2 and first verification (only for cooling and media water, selection "C and D")	**8**

Further designs	Order code
Please add "**-Z**" to Article No. and specify Order code	
Certificate	
Including factory test report (certificate) of FUE950	**Always included**
Cooling, setup for non water	
Water/glycol setting for media type "Tyfocor LS (R)" (only with neutral label, no verification and approval)	**C02**
Optional settings/programming	
Tariff function settings (specify in clear text, up to max. 20 characters)	**D02**
Pulse output setting of option module (specify in clear text, up to max. 20 characters)	**D06**
Pulse input setting of option module (specify in clear text, up to max. 20 characters)	**D08**
Pulse input setting of 4 ... 20 mA option module (please specify 20 mA related type and value in clear text, up to max. 20 characters)	**D10**
Special display units	
Flow in 'GPM' and Volume in 'gal' (x100) (digits/resolution as selected above, only with 0 digit resolution)	**L05**
Temperature in deg. F (digit resolution as selected above)	**L31**

Flowmeter SITRANS FUE950 operating instructions, accessories and spare parts

Operating instructions

	Article No.
• English	**A5E003424739**

This device is shipped with Safety Notes and a DVD containing further SITRANS F US literature.

All literature is available to download for free, in a range of languages, at
http://www.siemens.com/processinstrumentation/documentation

Accessories

	Article No.
Infrared optical head (Bluetooth type) for data acquisition & programming of FUE950	**A5E02611768**
Bracket for SITRANS FUE950 wall mounting (20 pcs.)	**A5E02611769**
Cable for data acquisition via RS 232 PC/D-sub 9F/3 wire	**A5E02611774**

Spare parts

	Article No.
Add-on modules for FUE950 (only for 7ME348 versions)	
Pulse input module (2 inputs)	**A5E03461432**
Pulse output module (2 outputs)	**A5E03461436**
Combined pulse in-/output module (2 inputs and 1 output)	**A5E03461437**
RS232 module (M-Bus protocol)	**A5E03461459**
RS485 module (M-Bus protocol)	**A5E03461512**
M-Bus output module	**A5E03461516**
Combined current output module, 2 x passive 4 ... 20 mA	**A5E03461583**
Connection set for option modules (types: Pulse, RS 232/RS 485, M-Bus, mA) (special connection cable with 2 plugs)	**A5E03461585**
Power supply for FUE950 (only for 7ME348 versions)	
3.6 V D-cell battery for SITRANS FUE950	**A5E03461708**
230 V AC supply module (incl. internal fuse T50 mA L 250 V and back-up battery) for SITRANS FUE950	**A5E03461717**
24 V AC supply module for SITRANS FUE950, incl. back-up battery	**A5E03461719**
Pocket for temperature sensors Pt500 (for related 4-wire Pt500 type only, 1 pc.)	
Stainless steel pocket (1 pc.), 135 mm length for 6 mm sensor diameter, max. PN 40 and max. 5 m/s (recommended for 140 mm sensor length).	**A5E03462868**
Stainless steel pocket (1 pc.), 225 mm length for 6 mm sensor diameter, max. PN 40 and max. 5 m/s (recommended for 230 mm sensor length).	**A5E03462870**
Pt500 4-wire temperature sensor pair (as spare part), with MID MI004 and PTB K7.2 approvals and verification (for related 4-wire sensor pocket types only)	
Pt500 sensor pair (6/140 mm), 4-wire with 5 m connection cable, 6 mm sensor diameter and 140 mm sensor length. MID approved DE-06-MI004-PTB011, PTB approved 22.77/09.01 (mentioned approvals are only valid if temp. sensors are used with the applicable temperature sensor pockets).	**A5E03462872**
PT500 sensor pair (6/230 mm), 4-wire with 5 m connection cable, 6 mm sensor diameter and 230 mm sensor length. MID approved DE-06-MI004-PTB011, PTB approved 22.77/09.01 (mentioned approvals are only valid if temp. sensors are used with the applicable temperature sensor pockets).	**A5E03462878**
FUE950 enclosure (only for 7ME348 versions)	
Bottom part of FUE950 enclosure (1 pc.)	**A5E03461508**
Snap fit for FUE950 enclosure (1 pc.)	**A5E03461731**

© Siemens 2021

Selection and ordering data (continued)

Pocket for Pt500 temperature sensors (for corresponding 2-wire Pt500 types only; 1 pc.)	
Brass pocket 6 mm, G½B x 40 mm (PN 16), 1 pc.	**A5E02611778**
Brass pocket 6 mm, G½B x 85 mm (PN 16), 1 pc.	**A5E02611779**
Brass pocket 6 mm, G½B x 120 mm (PN 16), 1 pc.	**A5E02611780**
Stainless steel 6 mm, G½B x 85 mm (PN 25), 1 pc.	**A5E02611781**
Stainless steel 6 mm, G½B x 120 mm (PN 25), 1 pc.	**A5E02611783**
Stainless steel 6 mm, G½B x 155 mm (PN 25), 1 pc.	**A5E02611792**
Stainless steel 6 mm, G½B x 210 mm (PN 25), 1 pc.	**A5E02611793**
Pt500 temperature sensor pair, 2-wire cable, 6 mm sensor diameter, with MID/EN-approval (for corresponding 2-wire sensor pocket types only)	
Cable length:	
2 m	**A5E02611794**
3 m	**A5E02611795**
5 m	**A5E02611796**
10 m	**A5E02611798**

Dimensional drawings

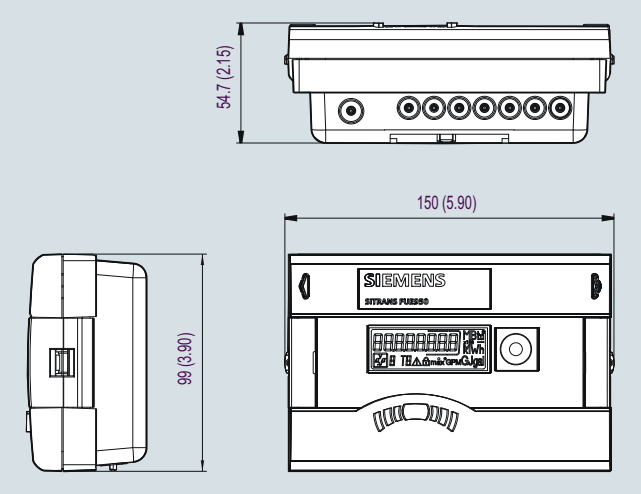

SITRANS FUE950, dimensions in mm (inch)

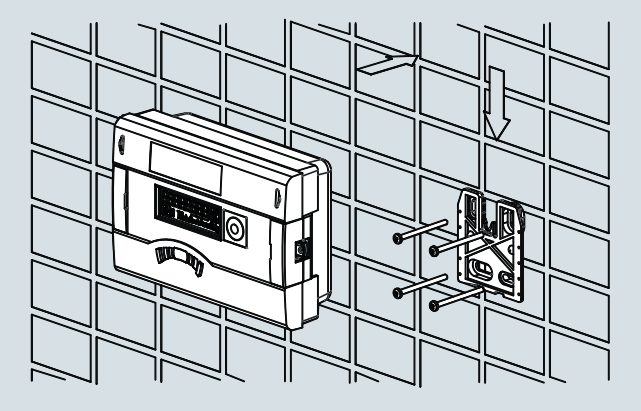

Wall mounting

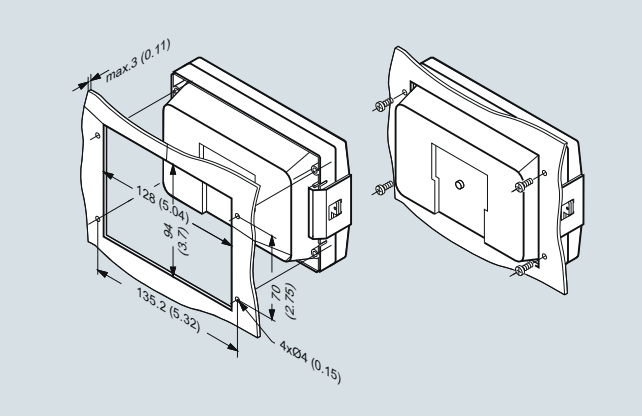

Panel mounting, dimensions in mm (inch)

Circuit diagrams

Electrical connection for SITRANS FUS380/FUE380/FUE950 and MAG 5000/6000/FUE950

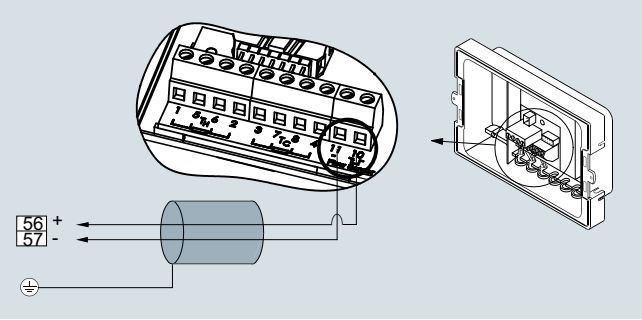

The diagram shows the connection between SITRANS FUE950 (terminals 10 and 11) and FUS380/FUE380 and MAG 5000/6000 (terminals 56 and 57). Temperature sensors must be connected to terminals 5 (1) and 6 (2) (T_H) and 7 (3) and 8 (4) (T_C).

Note:
The right flowmeter pulse output value must be equal to the FUE950 pulse input value and must be checked via the user menu of the transmitter MAG 5000/6000 or nameplate of FUE380 or FUS380.

© Siemens 2021

Application

The temperature sensor set is designed for use with the Siemens energy calculator type SITRANS FUE950 for measurement of the energy consumption in a district heating or cooling net.

Temperature sensors are one of the integral components of every thermal energy meter in heating or cooling applications. They are used for determining temperature changes in fluids due to energy taken from or supplied to the loop. The temperature is thus measured by mounting temperature sensors upstream and downstream from the point where the exchange in the thermal energy of the system is.

To ensure an accurate measurement of the temperature difference according to MID (EN 1434) or PTB K7.2 the sensors are delivered as matched pairs.

By selection with the corresponding order code the Pt500 sensor pair sets can be delivered with heating approval or with approvals for combined heating/cooling applications.

Technical specifications

Temperature sensor pairs

2-wire Pt500

Pt500 2-wire temperature sensor pair (EN 1434)	
Measuring insert	Pt500 temperature sensor, EN 60751, tolerance class B, 2-wire
Pairing	Paired to EN 1434 (10 … 130 °C/14 … 266 °F)
Media temperature	0 … 150 °C (32 … 302 °F)
Response time $T_{0.5}$	See sensor pocket specifications
Medium	Typically heating water
Pressure rating	See sensor pocket specifications
Protection	IP65
Pipe material	AISI 304 Ti/1.4303
Dimension	∅ 6 mm
Sensor tube length	50 m
Cable length	Up to 10 m (32.8 ft), fixed connected silicon cable, 2 connection wire terminals, terminal sleeves to DIN 46228

4-wire Pt500

Pt500 4-wire temperature sensor pair (with MID and PTB K7.2 approval)	
Measuring insert	Pt500 temperature sensor, EN 60751, tolerance class to ISO 751 Class B; 4-wire
Pairing	Matched paired according to EN 1434 at 10, 75 and 140 °C (50, 167 and 284 °F)
Type approval	MID (DE-06-MI004-PTB011) and PTB K7.2 (PTB 22.77/09.01). Only to be mounted with related sensor pockets according to the type approvals.
Media temperature	0...150 °C (32 ... 302 °F)
Permissible temp. pair range for ΔT	
• Heating	3 … 150 K
• Cooling	3 … 85 K
Medium	Approved for heating/cooling water
Protection	IP65
Environment	
• Meachnic class	M3
• Electromagnetic class	E1 (MID)
Pressure rating	See sensor pocket specifications
Material	
• Protective tube	Stainless steel AISI 304Ti/1.4571 (or similar), diameter of protective tube: 6 mm
• Connector cable	Silicon cable, 4 connection wire terminals, terminal sleeves to DIN 46228
Sensor tube length	140 or 230 mm (5.51 or 9.06 inch)
Cable length	5 m (16.4 ft), fixed connected

Sensor pockets

Stainless steel sensor pocket (for 4-wire Pt500 types only - standard)	
Media temperature	0 ... 150 °C (32 ... 302 °F)
Approval	Approved only together with 4-wire sensors
Medium	Approved for heating/cooling water; up to max. 5 m/s flow velocity
Pressure rating	PN 40
Length	Face-to-face length 120/135 and 210/225 mm (4.72"/5.23" and 8.27"/8.86")
External diameter	Protective tube 8/11 mm (0.32"/0.43")
Internal diameter	Protective tube 6 mm (0.24")
Pipe connection	Thread G 1/2" (with sealing screw for sensor)
Material	Protective tube AISI 316Ti/1.4571 (or similar)
Use	• Use with related 4-wire Pt500 sensors only (according type approval) • For flow velocities up to 5 m/s • Recommended to install with welded sleeve (according to EU standard)

Stainless steel sensor pocket (for 2-wire Pt500 types only, some only available as spare parts)					
Media temperature	0 ... 180 °C (32 ... 356 °F)				
Medium	Approved for heating water				
Response time $T_{0.5}$	Typically 13 s at 0.4 m/s without pasta				
	Typically 5 s at 0.4 m/s with pasta				
Pressure rating	PN 25				
Length	L1 (mm)	92	127	168	223
	L (mm)	82	117	155	210
Material	Stainless steel: AISI 316Ti/1.4571				
Use	For 2-wire Pt500 types only				

Brass sensor pocket (for 2-wire Pt500 types only, some only available as spare part)				
Media temperature	0 ... 150 °C (32 ... 302 °F)			
Medium	Approved for heating water			
Response time $T_{0.5}$	Typically 9 s at 0.4 m/s without pasta			
	Typically 5 s at 0.4 m/s with pasta			
Pressure rating	PN 16			
Length	L1 (mm)	47	92	127
	L (mm)	40	82	117
Material	Brass: $CuZn_{40}Pb_2$ (Ms58)			
Use	For 2-wire Pt500 types only			

© Siemens 2021

Dimensional drawings

Pt500 2-wire temperature sensor pair (EN 1434)

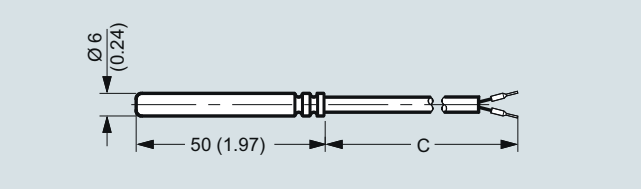

Pt 500 2-wire temperature sensor, dimensions in mm (inch)

Pt500 temperature sensor pair (EN 1434)	
Cable length	2, 3, 5 or 10 m ('C' at the dimensional drawing)

Pt500 4-wire temperature sensor pair (with MID and PTB K7.2 approval)

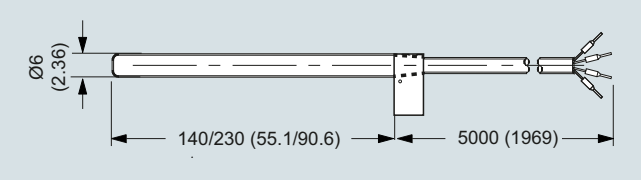

Pt500 4-wire temperature sensor, dimensions in mm (inch)

Stainless steel sensor pocket (for 2-wire Pt500 types only, some only available as spare parts)

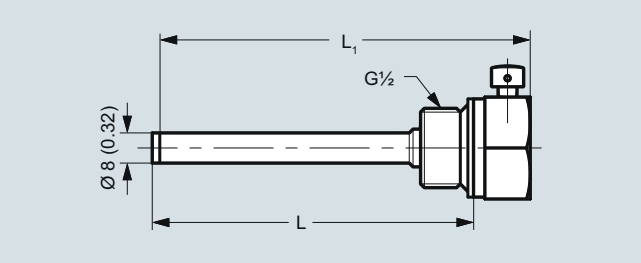

Sensor pocket (for 2-wire Pt500 types only), stainless steel, dimensions in mm (inch)

Stainless steel sensor pocket (for 2-wire Pt500 types only)					
Length	L1 (mm)	92	127	168	223
	L (mm)	82	117	155	210

Stainless steel sensor pocket (for 4-wire Pt500 types only - standard)

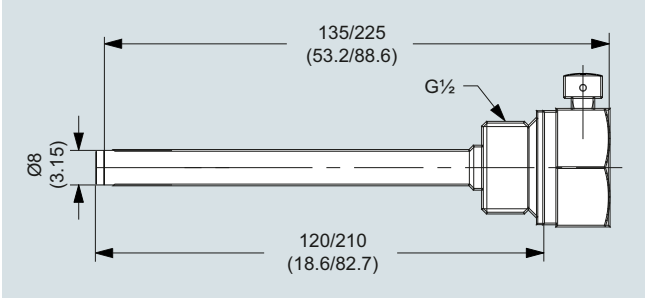

Stainless steel sensor pocket, dimensions in mm (inch)

Brass sensor pocket (for 2-wire Pt500 types only, some only available as spare part)

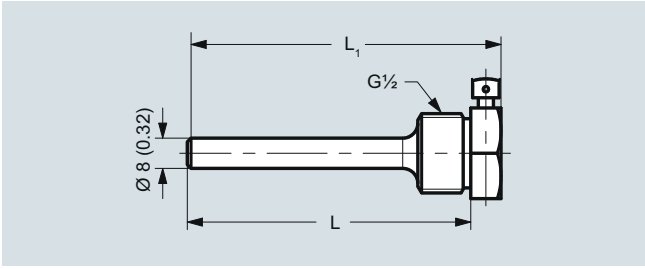

Sensor pocket, brass (for 2-wire Pt500 types only), dimensions in mm (inch)

Brass sensor pocket for 2-wire Pt500 types only)				
Length	L1 (mm)	47	92	127
	L (mm)	40	82	117

© Siemens 2021

SITRANS FS230 ultrasonic flowmeter

Overview



SITRANS FST030 with FSS200 and external DSL

SITRANS FS clamp-on ultrasonic flowmeters provide highly accurate measurement while minimizing installation time and maintenance expense.

Benefits

- Easy installation; no need to cut pipe or stop flow
- Minimal maintenance; external sensors do not require periodic cleaning
- No moving parts to foul or wear
- No pressure drop or energy loss
- Wide turn-down ratio
- Single or dual path with internal DSL, up to four paths with external DSL option

System performance	
Approvals	• ATEX Zone 2 (Sensors: Zone 0, 1, 2) • IIECEx Zone 2 (Sensors: Zone 0, 1, 2) • FM/FMc Class I Div. 2 (Sensors: Class I Div. 1)
Accuracy	± 0.5 ... 1 % for velocities above 0.3 m/s and >10 diameters straight run
Repeatability	± 0.25 % (based on ISO 11631)
Pipe size range	12.7 ... 10 m (0.5 ... 394")
Wall Thickness Range	0.64 ... 76.2 mm (0.025 ... 3.0")
Pipe material	Any sonically conductive material (steel, plastic, aluminum, glass, cement, ductile iron, copper)
Optional External DSL	Zone 0, 1, 2, Class 1 Div. 1 with transmitter in Zone 2 Class 1 Div 2 area

Optional External DSL

The optional external DSL allows for additional flexibility in application configurations. The External DSL benefits include:

- Measurement of 1-4 paths
- 2 x additional analog inputs, RTD or current
- Up to 150 m cable from DSL to transmitter (connection from zone 0,1 area to zone 2 area)

Applications

SITRANS FS230 standard functions are suitable for a wide variety of liquid applications, including the following:

- Water industry
  - Raw water
  - Potable water
  - Chemicals
- Wastewater industry
  - Raw sewage
  - Effluent
  - Sludges
  - Mixed liquor
  - Chemicals
- HVAC industry
  - Condensers
  - Hot and cold water systems
- Power industry
  - Nuclear
  - Fossil
  - Hydroelectric
- Processing industry
  - Process control
  - Batching
  - Rate indication
  - Volumetric and mass measurement

SITRANS FS230 hydrocarbon functions are ideal for applications carrying crude oil, refined petroleum or liquefied gas.

Standard volume (high end system)

- Standard (net) volume flow measurement
- Suitable for use in leak detection systems
- Mass flow output measurement
- Chemical and petrochemical processing
- Precise identification of interfaces on multi-liquid pipelines
- Product identification
- Standard density indication
- Applications with multiple liquids having a wide viscosity range
- Automatic gross volume compensation due to viscosity

SITRANS FS230 is ideal for most natural and process gas industry applications, including:

- Checkmetering
- Allocation
- Flow survey verification
- Lost and unaccounted for (LAUF) gas analysis
- Production
- Storage

The FS230 can be supplied with an external DSL option that allows for up to four paths with two additional analog inputs. The External DSL enclosure can be installed in a Zone 1 or Div 1 area near the sensors and measurement pipe using short sensor cables, with communication cable to transmitter up to 150 meters away.

© Siemens 2021

Overview (continued)

System information and selection guide

SITRANS FS clamp-on flowmeters	FS230 (Standard)	FS230 (Hydrocarbon)	FS230 (Gas)
Industry/Applications			
Water and aqueous solutions	X		
Utility district heating, cooling	X		
Chemical	X		
Hydrocarbons/petrochemical, multiple products or varying viscosity, liquefied gases, net and gross volume		X	
Hydrocarbons (single product with limited viscosity range) gross volume	X	X	
Very low flow (< 0.1 m/s) in small pipes	X		
High temperature applications < 232 °C (450 °F)	X	X	
Refrigeration liquids	X		
Food products	X		
Natural gas			X
Other gases i.e. propane, oxygen, argon etc.			X
Design			
Field clamp-on (non-intrusive)	X	X	X
Standard volume or mass flow; per API MPMS chapter 11.1		X	X
Interface detection		X	X
Standard density output		X	X
Temperature measurement	X	X	X
Analog input	X	X	X
Large graphical display	X	X	X
Configuration and diagnostic software PDM compatible	X	X	X
Number of acoustic paths and channels			
1-path	X	X	X
2-path	X	X	X
3-path (with external DSL)	X	X	X
4-path (with external DSL)	X	X	X
Size			
12.7 ... 10 000 mm (0.5" ... 394")	X		
38 ... 10 000 mm (1.5" ... 394")		X	
38 ... 1 200 mm (1.5" ... 48")			X
Approvals			
FM/FMc[1)]	X	X	X
ATEX	X	X	X
UL/ULc	X	X	X
IECEx	X	X	X

[1)] Nema 4X associated equipment in DIV 2 connected to DIV 1 sensors and DIV 1 external DSL.

© Siemens 2021

Function

Operating Principle

The SITRANS FS system is a transit-time ultrasonic meter that provides exceptional performance using a non-intrusive clamp-on approach. Ultrasonic sensors transmit and receive acoustic signals directly though the existing pipe wall, where the fluid refraction angle is governed by Snell's law of refraction.

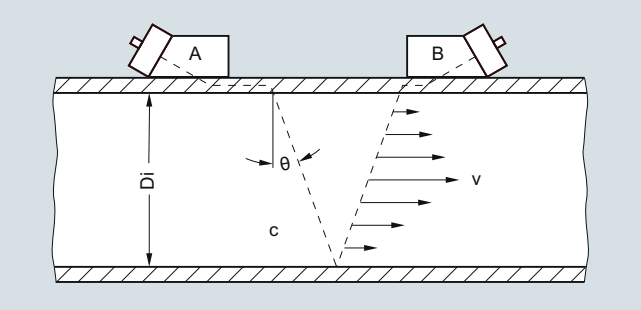

Clamp-on sensor mounted in a reflect configuration

The beam refraction angle is calculated as follows:

$\sin\theta = c / V_\phi$

c = Velocity of sound in fluid

V_φ = Phase velocity (a constant in the pipe wall)

The flowmeter automatically compensates for any change in fluid sound velocity (or beam angle) in response to variations in the average transit time between sensors A and B. By subtracting the computed fixed times (within the sensors and pipe wall) from the measured average transit time, the meter can then infer the required transit time in the fluid (T_{Fluid}).

The sound waves traveling in the same direction as the flow ($T_{A,B}$) arrive earlier than sound waves traveling against the direction of flow ($T_{B,A}$). This time difference (Δt) is used to compute the line integrated flow velocity (v) as shown in the equation below:

$v = V_\varphi / 2 \cdot \Delta t / T_{Fluid}$

Once the raw flow velocity is determined, the fluid Reynolds Number (Re) must be determined to properly correct for fully developed flow profile. This requires the entry of the fluid's kinematic viscosity (visc) as shown in the equations below, where Q represents the final flow profile compensated volumetric flow rate.

$Re = Di \cdot v / visc \cdot Q = K(Re) \cdot (\pi / 4 \cdot Di^2) \cdot v$

v = Flow velocity

$visc = \mu / \rho$ = (dynamic viscosity / density)

K(Re) = Reynolds flow profile compensation

In wetted type ultrasonic flowmeters the meter constants are configured prior to leaving the factory. As this is not possible with clamp-on meters, the settings must be made by the customer at the time of installation. These settings include pipe diameter, wall thickness, liquid viscosity, etc.

SITRANS clamp-on flowmeters that include temperature sensing can be configured to dynamically infer changes in fluid viscosity for the purpose of computing the most accurate flow profile compensation (K_{Re}).

Ultrasonic sensor types

Two basic types of clamp-on sensors can be selected for use with the SITRANS F S flowmeter. The lower cost "universal" sensor is the most common type in the industry and is suitable for most single liquid applications where the sound velocity does not vary much. This sensor type can be used on any sonically conductive pipe material (including steel) making it well suited for portable survey applications. Universal sensors are selected based on the pipe diameter range alone, so wall thickness is less important to the selection process.

The second sensor type is the "WideBeam" sensor (called high precision), which utilizes the pipe wall as a kind of waveguide to optimize the signal to noise ratio and provide a wider area of vibration. This makes this kind of sensor less sensitive to any change in the fluid medium.

The WideBeam sensor is designed for steel pipes, but can also be used with aluminum and titanium. It is the preferred sensor for HPI applications. Note that unlike the universal type, this sensor selection is dependent only on the pipe's wall thickness.

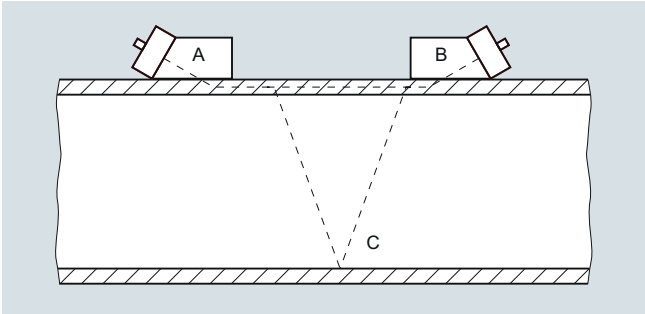

Multi-path flowmeters

For improved flow profile averaging, redundancy or better cost per measurement, clamp-on meters can be supplied with 1, 2, 3 or 4 path measurement systems.

In the standard FS230 systems, these can be installed on a single pipe as shown below (four paths on same pipe).

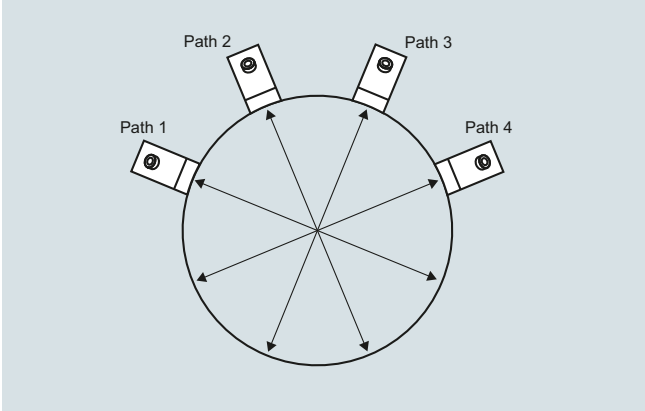

Four path installation example

© Siemens 2021

Function (continued)

SITRANS meter family description

SITRANS FS230 clamp-on flowmeters

The FS230 system is a basic function, permanent (or dedicated) Clamp-on meter that is available with a full range of safety approvals and I/Os. This meter can be used in a wide range of applications.

FST030 transmitter standard flow functions

When configured with standard flow functions, the FST030 transmitter is typically programmed with a fixed viscosity and specific gravity entry, which can limit the mass flow and volumetric flow accuracy when highly variable (multi-product) liquid properties flow through the same pipeline.

It will have the ability to accommodate clamp-on RTDs, or analog input from a temperature transmitter.

FST030 hydrocarbon flow functions

When configured with hydrocarbon functions, the FST030 can be used for applications that will flow a wide range of viscosity with a standard volume (mass) and interface detection functions available. All functions rely on a variable referred to as "LiquIdent (TM)", which is used to infer the liquid's viscosity and density. This variable represents the measured liquid sonic velocity compensated by the operating temperature and pressure, so for a given liquid product the measured LiquIdent (TM) output will remain constant over a wide range of pressure or temperature.

Standard volume description:

This LiquIdent (TM) variable can also be used to identify the liquid flowing through the pipe as well as it's physical properties (density, viscosity and compressibility) at base conditions. With this information the meter can be configured to output a temperature and pressure compensated (standard) volume flow rate using the API MPMS chapter 11.2.1 methods as shown below.

Correction for temperature:

Compute thermal expansion coefficient (α_b):

$\alpha_b = KO / \rho_b^2 + K1 / \rho_b$

where: KO and K1 are constants dependent on type of liquid and ρb is the liquid density at base conditions

Compute temperature correction factor (K_T):

$K_T = \rho_b * EXP (- \alpha_b \Delta T (1 + 0.8 \alpha_b \Delta T))$

where: ΔT = (T – base temperature)

Correction for pressure:

Compute compressibility factor (F):

$F = EXP(A + B T + (C + D T) / \rho_b^2$

where: A, B, C and D are constants, and "T" is liquid temperature

Compute pressure correction factor (K_p):

$K_p = 1 / (1 – F (P_{act} – P_{base}) * 10^{-4})$

Final volume correction: $Q_{std} = Q_{act} * K_t * K_p$

Available outputs from this meter include: API, standard density, mass flowrate, standard volume flowrate and liquid identification.

General installation guidelines for transit time clamp-on sensor

- Minimum measuring range: 0 to ± 0.3 m/s velocity (see meter accuracy graph below for more detail)
- Maximum measuring range: 0 to ± 12 m/s (± 30 m/s for high precision sensors). Final flow range determination requires application review

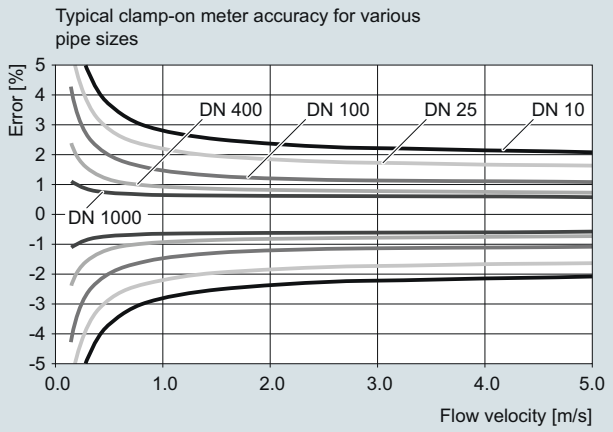

- Pipe must be completely full within the sensor installation volume for accurate flow measurement
- Typical MINIMUM straight pipe requirements are: 10 Diameters upstream/5 Diameters downstream. Additional straight run is required for double out-of-plane elbows and partially open valves.
- Sensors should be installed at least 20° off vertical for horizontal pipes. This reduces the chance of beam interference from gas buildup at the top of the pipe
- Operation inside the Reynolds transition region, between 1000 < Re < 5000 should be avoided for best accuracy
- Submersible and direct burial installations can be accommodated. Consult sales representative for details
- Ultrasonic coupling compound is provided with all sensor orders. Insure that a permanent coupling compound is used for long term installations
- Refer to the "Sensor type selection guide" to insure proper application of the equipment

© Siemens 2021

3

Function (continued)

Sensor type selection guide



	Standard sensor supported in MLFB		
Considerations for sensor selection	**High precision**	**Universal**	Notes
Media			
General survey (clean liquids) on non-steel pipes		**X**	
General survey (clean liquids) on a limited range of steel pipes	**X**		
Moderately aerated liquid or slurry, up to 121 °C (250 °F)	**X**		
Permanent installation on steel pipe (clean liquids and gases)	**X**		
Installation in offshore or corrosive environment	**X**[1)]	**X**[2)]	Sensor size C/D/E come standard as corrosion resistant. Size A and B optional stainless steel
Liquid temperature greater than 120 °C (248 °F)	**O**	**X**	FSS200 high temperature metal block sensors (up to 232 °C (450 °F))
Operation on single pipeline flowing multiple products	**X**	**O**	
Pipe material			
Steel	**X**		
Steel pipe with diameter/wall thickness ratio <10	**O**	**X**	
Non-steel pipe material (copper, ductile iron, cast iron, etc.)	**O**	**X**	High precision sensors can also be used on plastic and aluminum pipes in special cases
Wall thickness > 31.75 mm (1.25")	**O**	**X**	

O = not suitable X = preferred choice

1) For steel and stainless steel pipes only

2) Not preferred for steel pipes

Definitions

Sensor chart	Description
FSS200	Formerly 1011 clamp-on sensors of the 1010 systems
Standard	Standard system sensor, selectable as part of a configured product
Special	Sensors available for non-standard applications and pipes. Contact tech support for application use
Corrosion resistant	Stainless steel metal parts on all Size C, D and E and all high temperature sensors
Aluminum	Aluminum metal parts on all HP and Universal size A and B (Corrosion resistant on request for size B)
Spare	Not available as part of a configured product, must be ordered separately
CE	Transmitter and sensors certified for sale in the EU
Trackless mount	Sensors fixed only by straps, no other mounting (spacer bar as an option) - not recommended
Tracks	Permanent installation for universal size A/B, high precision size A/B and all sizes of high temperature. Tracks always come as dual-part for either direct or reflect mounting, and always with straps.
Frames	Three sizes, for permanent installation for universal size C/ D/ E, and for high precision size C/D. For universal and high precision size B available for pipes > 125 OD (Spare)
T1	Usable from -40 ... +120 °C (-40 ... +248 °F), but best for Ø temperature below 80 °C (< 176 °F), standard
T2	Usable from -40 ... +120 °C (-40 ... +248 °F), but best for Ø temperature above 80 °C (> 176 °F)
Submersible	Sensors can be used submerged; adding Denso for supplemental protection is recommended

© Siemens 2021

Function (continued)

Sensor availability guide

Sensor models	Availability												
	Standard	Spare only	ATEX/FM/FMc/IECEX	Corrosion restistant	Trackless	Tracks	Frames	High precision mount	T1 best use < 80 °C (176 °F)	T2 best use > 80 °C (176 °F)	Submersible	Catalog
FSS200 Universal Sensor -40 … 120 °C (-40 ... +248 °F) Polyetherimide - stainless steel housing CE IP68												
A1 Universal for pipe OD – 5.8 … 50.8 mm (0.23" … 2")		X	X	X	X[1)]	X					X	
A2 Universal for pipe OD – 12.7 … 50.8 mm (0.5" … 2")	X		X	X	X[1)]	X					X	X
B1 Universal for pipe OD – 12.7 … 76 mm (0.5" … 3")		X	X	X	X[1)]	X	X				X	
B2 Universal for pipe OD – 12.7 … 76 mm (0.5" … 3")		X	X	X	X[1)]	X	X				X	
B3 Universal for pipe OD – 19 … 127 mm (0.75" … 5"")	X		X	X	X[1)]	X	X				X	X
C1 Universal for pipe OD – 51 … 254 mm (2" … 10")		X	X	X	X		X				X	
C2 Universal for pipe OD – 51 … 254 mm (2" … 10")		X	X	X	X		X				X	
C3 Universal for pipe OD – 51 … 305 mm (2" … 12")	X		X	X	X		X				X	X
D1 Universal for pipe OD – 102 … 508 mm (4" … 20")		X	X	X	X		X				X	
D2 Universal for pipe OD – 152 … 610 mm (6" … 24")		X	X	X	X		X				X	
D3 Universal for pipe OD – 203 … 610 mm (8" … 24")	X		X	X	X		X				X	X
*E1 Universal for pipe OD – 254 … 3048 mm (10" … 120")		X	X	X	X		X				X	
*E2 Universal for pipe OD – 254 … 6096 mm (10" … 240")	X		X	X	X		X				X	X
*E3 Universal for pipe OD – 304 … 10007 mm (12" … 394")		X	X	X	X		X	X			X	
FSS200 High Precision Sensor -40 ... +120 °C (-40 ... +248 °F) Polyetherimide - stainless steel housing T1/T2 CE IP68												
A1H (High Precision) for pipe WT - 0.64 ... 1.0 mm (0.025" ... 0.04")		X	X	X	X[1)]	X			X		X	X
A2H (High Precision) for pipe WT - 1.0 ... 1.5 mm (0.04" ... 0.06")	X		X	X	X[1)]	X			X		X	X
A3H (High Precision) for pipe WT - 1.5 ... 2.0 mm (0.06" ... 0.08")	X		X	X	X[1)]	X			X		X	X
B1H (High Precision) for pipe WT - 2.0 ... 3.0 mm (0.08" ... 0.12")	X		X	X	X[1)]	X	X		X	X	X	X
B2H (High Precision) for pipe WT - 3.0 ... 4.1 mm (0.12" ... 0.16")	X		X	X	X[1)]	X	X		X	X	X	X
B3H (High Precision) for pipe WT - 2.7 ... 3.3 mm (0.106" ... 0.128")		X	X	X	X[1)]	X	X		X	X	X	X
C1H (High Precision) for pipe WT - 4.1 ... 5.8 mm (0.16" ... 0.23")	X		X	X	X		X	X	X	X	X	X
C2H (High Precision) for pipe WT - 5.8 ... 8.1 mm (0..23" ... 0.32")	X		X	X	X		X	X	X	X	X	X
* D1H (High Precision) for pipe WT - 8.1 ... 11.2 mm (0..32" ... 0.44")	X		X	X	X		X	X	X	X	X	X
* D2H (High Precision) for pipe WT - 11.2 ... 15.7 mm (0.44" ... 0.62")	X		X	X	X		X	X	X	X	X	X
* D3H (High Precision) for pipe WT - 7.4 ... 9.0 mm (0..293" ... 0.354")		X	X	X	X		X	X	X	X	X	X
* D4H (High Precision) for pipe WT - 15.7 ... 31.8 mm (0..62" ... 1.25")	X		X	X	X		X	X	X	X	X	X
FSS200 High Temperature Universal Sensor -40 ... +230 °C (-40 ... +446 °F)												
High Temperature size 1 ... 230 °C (Ø 12.7 ... 100 mm)		X	X	X		X						
High Temperature size 2 ... 230 °C (Ø 30 ... 200 mm)	X		X	X		X						X
High Temperature size 3 ... 230 °C (Ø 150 ... 610 mm)	X		X	X		X						X
High Temperature size 4 ... 230 °C (Ø 400 ... 1200 mm)	X		X	X		X						X
High Temperature size 2A ... 230 °C (Ø 30 ... 200 mm)		X	X	X		X						
High Temperature size 3A ... 230 °C (Ø 150 ... 610 mm)		X	X	X		X						
High Temperature size 4A ... 230 °C (Ø 400 ... 1200 mm)		X	X	X		X						

[1)] Usable, but not recommended for selection.

© Siemens 2021

3

Function (continued)

Sensor mounting availability guide

	Sensor		
	FSS200 Dedicated Universal	**FSS200 Dedicated High precision**	**FSS200 High temperature Universal**
Mounting			
Trackless[1)]	**X**	**X**	
Tracks universal dedicated	**X**		
Tracks HP dedicated		**X**	
Frames universal dedicated	**X**		
Frames HP dedicated		**X**	
Tracks high temperature universal			**X**
High precision mounting single enclosure		**X**	
High precision mounting dual enclosure		**X**	
SpacerBar	**X**	**X**	
Straps	**X**	**X**	**X**
Denso	**X**	**X**	

1) Usable but not recommended

© Siemens 2021

Overview



FST030 is based on the latest developments within Digital Signal Processing (DSP) technology – engineered for high measuring performance, fast response to step changes in flow, high immunity against process noise, easy to install commission and maintain.

The FST030 transmitter delivers true multi-parameter measurements i.e. volume flow, standard volume flow, density, mass flow, fluid sound velocity and temperature.

The multiple outputs and bus communication mean that all primary process information can be read either instantaneously (10 ms update) or periodically as required by plant operations.

Process values

- Volume flow
- Mass flow
- Flow velocity
- Sound velocity
- Standard volume flow (hydrocarbon variant only)
- Density
- Kinematic viscosity
- Pressure
- Medium temperature
- Specific gravity (hydrocarbon variant only)
- Totalizer 1
- Totalizer 2
- Totalizer 3
- Standard density (hydrocarbon variant only)
- Standard specific gravity (hydrocarbon variant only)
- Standardizing factor (hydrocarbon variant only)
- LiquIdent (hydrocarbon variant only)
- API gravity (hydrocarbon variant only)
- Standard API gravity (hydrocarbon variant only)
- Standard kinematic viscosity (hydrocarbon variant only)
- Liquid identifier (hydrocarbon variant only)

Benefits

Flow calculation and measurement

- Dedicated volume flow calculation with DSP technology
- 100 Hz update rate for all output on all primary process values
- Maximum data age from sensor to output is 20 ms
- Independent low flow cut-off settings for volume and mass flow, standard volume flow and velocity
- Zero-point adjustment on command from discrete input or host system

Operation and display

- User-configurable operation display
  - Full graphical display 240 x 160 pixels with up to 6 programmable views
  - Self-explaining alarm handling/log in clear text
  - Help text for all parameters appears automatically in the configuration menu
- SensorFlash technology stores production specific system documentation and provides removable memory of all flowmeter setups and functions
  - Calibration certificates (with ordered calibration)
  - Non-volatile memory backup of operational data
  - Transfer of user configuration to other flowmeters
  - 4GB SD card for storage and data logging
  - Audit trail of all parameter changes
  - Alarm logging

Alarms and safety

- Advanced diagnosis and service menu enhances trouble-shooting and meter validation
- Configurable upper and lower alarm and warning limits for all process values
- Alarm handling can be selected between Siemens and NAMUR standard configurations

Outputs and control

- Monitoring comprising of 3 individually configurable totalizers
- Multi-parameter outputs, configurable outputs assigned individually to any of the following parameters:
  - Volume flow
  - Standard volume flow
  - Mass flow
  - Flow velocity
  - Sound velocity
  - Density
  - Process viscosity
  - Process pressure
  - Process/medium temperature

Up to six I/O channels are configured as follows.

Channel 1

Channel 1 is 4 to 20 mA analog output with HART 7.5. The current signal can be configured for massflow, volumeflow and includes the availability of active or passive function selected by wiring on the non-Ex terminals. Alternative Modbus RTU RS 485 is available.

Channel 2

Channel 2 is a signal output which can be freely configured for any process variable.

- Analog current (0/4 to 20 mA)
- Frequency or pulse
- Operational and alarm status

Channels 3 and 4

Channels 3 and 4 can be ordered with signal (freely configured for any process variable) or relay outputs, or signal input.

© Siemens 2021

SITRANS FST030 transmitter, wall mount housing

Benefits (continued)

Signal output

Signal output can be user configured to:

- Analog current (0/4 to 20 mA)
- Frequency or pulse
- Redundant frequency or pulse (linked to channel 2)
- Operational and alarm status

Signal input

Signal input can be user-configured for:

- Totalizer reset functions
- Force outputs or freeze process values
- Initiate automatic zero point adjustment

Relay

Relay output(s) can be user configured to:

- Alarm status

4-20 mA signal outputs and inputs are ordered as active or passive for Ex versions, active and passive for non-Ex versions - function selected by wiring on the terminals.

During initial commissioning of the flowmeter, all outputs can be forced to a preset value for simulation, verification or calibration purposes.

Channels 5 and 6 (with internal DSL)

- RTD temperature inputs for 1000, 500 or 100 Ω RTD's - 2, 3 or 4 wire RTD's supported
- Channels 5 and 6 (with external DSL option)
- RTD Temperature inputs or 4-20 ma inputs. Selectable in menu.

Approvals and certificates

The SITRANS FST030 transmitter was designed to comply with or exceed the requirements of international standards and regulations.

Design

The SITRANS FST030 is designed in an IP67/Nema 4X aluminum enclosure with corrosion resistant coating. It can be wall or pipe mounted and the enclosure can be locked with a padlock or wired with lead security seals. Includes all flow and DSL functions integrated into one unit.

The FST030 is available as standard with one current, HART 7.5 output and can be ordered with additional input/output functions.

The transmitter has a modular design with discrete, replaceable electronic modules and connection boards to maintain separation between functions and facilitate field service. All modules are fully traceable and their provenance is included in the transmitter setup.

SensorFlash

SensorFlash is a standard, 4 GB micro SD card with the ability to be updated by PC. It is supplied with each transmitter and comes with a complete set of certification documents including report if ordered. Factory conformance certificates are optional at ordering.

The Siemens SensorFlash memory unit offers the following features and benefits:

- Copy site setups to SD card for easy transfer to other similar transmitters
- Permanent database of operational and functional information from the moment that the flowmeter is switched on
- New firmware updates can be downloaded from the Siemens internet portal for Product Support and placed onto SensorFlash (unmounted from the transmitter and inserted into a PC's SD card slot). The firmware is then inserted into the existing flowmeter for system/firmware upgrade.

Function

The following functions are available:

- Up to four configurable outputs and 2 RTD input channels selected at ordering
- Outputs can be individually configured for mass flow, volume flow etc.
- Three built-in totalizers which can count positive, negative or net flows
- Independent low flow cut-offs, adjustable
- Uni/bidirectional flow measurement
- Flow direction adjustable
- Alarm system consisting of alarm-log, alarm pending menu
- Change log, logs all changes made to menu parameters or via communications
- Internal data logger
- Display of operating time with real-time clock
- Flowrate outputs are freely configurable between maximum negative and maximum positive flows according to the sensor capacity
- Limit switches programmable for flow, density and temperature. Limit points can be graded as warning and alarm for values both above and below nominal process conditions
- Zero adjustment menu, with zero point evaluation display
- Full service menu for effective and straight forward application and meter troubleshooting
- Precise temperature measurement ensures optimal accuracy on massflow and density
- Fully compatible with Siemens PDM version 8.2 service pack 1 or higher

© Siemens 2021

Technical specifications

Process media	• Suitable for virtually any sonically conductive fluid, including hazardous liquids • Aggregate state: Light slurry and liquid
Process variables	• Volume flow • Mass flow • Flow velocity • Sound velocity • Standard volume flow (hydrocarbon variant only) • Density • Kinematic viscosity • Pressure • Medium temperature • Specific gravity (hydrocarbon variant only) • Totalizer 1 • Totalizer 2 • Totalizer 3 • Standard density (hydrocarbon variant only) • Standard specific gravity (hydrocarbon variant only) • Standardizing factor (hydrocarbon variant only) • LiquIdent (hydrocarbon variant only) • API gravity (hydrocarbon variant only) • Standard API gravity (hydrocarbon variant only) • Standard kinematic viscosity (hydrocarbon variant only) • Liquid identifier (hydrocarbon variant only)
Current output	
Current	0 … 20 mA or 4 … 20 mA (channel 1 only 4 … 20 mA)
Load	< 500 Ω per channel
Time constant	0 … 100 s adjustable
Digital output	
Pulse	41.6 µs … 5 s pulse duration
Frequency	0 … 10 kHz, 50 % duty cycle, 120 % overscale provision
Time constant	0 … 100 s adjustable
Active	0 … 22 V DC, 30 mA, short-circuit-protected
Passive	3 … 30 V DC, max. 110 mA
Relay	
Type	SPDT dry contact relay
Load	30 V AC/100 mA
Functions	Alarm level, alarm number, limit, flow direction
Digital input	
Voltage	15 … 30 V DC (2 … 15 mA)
Current	4 ... 20 mA
Functionality	Reset totalizer 1, 2 and 3, force output, freeze process values, zero point adjustment

Galvanic isolation	All inputs and outputs are galvanically isolated, isolation voltage 500 V
Alarm and warning limit	Available for all process values
Totalizer	Three counters for forward, net and reverse flow
Display	• Background illumination with alphanumerical text to indicate flow rate, totalized values, settings and faults • Adjustable damping constant of 0 ... 100 s • Reverse flow indicated by negative sign
SD card functions	• Parameter change log • Configurable data logger • FW update log • Diagnostic log • Error and alarm log • Parameter backup
Ambient temperature	
Operation	
• Transmitter	-40 ... +60 °C (-40 ... +140 °F), (humidity max. 95 %)
• Display	-20 ... +60 °C (-4 ... +140 °F)
Storage	
• Transmitter	-40 ... +70 °C (-40 ... +158 °F) (humidity max. 95 %)
Communication	HART 7.5 Modbus RTU RS 485
Enclosure	
Material	Aluminum
Rating	IP66/67, Nema 4X to IEC 529 and DIN 40050 (1 mH_2O for 30 min.)
Mechanical load	18 ... 400 Hz random, 3.17 g RMS, in all directions
Power supply	
Universal	20 ... 27 V DC 100 ... 240 V AC, 47 ... 63 Hz
Fluctuation	No limit
Power consumption	20 W/22 VA
Minimum pressure for Gas	7 … 10 bar (100 … 145 psi), typical (gas composition and application dependent; plastic pipes support operation at atmospheric pressure)
Environment	
Environmental conditions acc. to IEC/EN/UL 61010-1	• Altitude up to 2000 m • Pollution degree 2 • Overvoltage category II
Maintenance	The flowmeter has a built-in error log/pending menu which should be inspected on a regular basis
Cable glands	Cable glands are available in nylon, nickel plated brass or stainless steel (316L/W1.4404)

© Siemens 2021

Technical specifications (continued)

Approvals	
For non-hazardous area	No approval required
For hazardous area	
• ATEX	
- Sensor	Zone 0, 1, 2
- Transmitter with integrated DSL	Zone 2
- External DSL	Zone 0, 1, 2
• FM	
- Sensor	Class 1, Div 1, 2
- Transmitter	Class 1, Div 2
- External DSL	Class 1, Div 1
• FM Canada	
- Sensor	Class 1, Div 1, 2 (Zone 0, 1, 2)
- Transmitter with integrated DSL	Class 1, Div 2 (Zone 2)
- External DSL	Class 1, Div 1, 2 (Zone 0, 1, 2)
• Combination Approval: ATEX, IECEx, FM, FM Canada	
- Sensor	Zone 0, 1, 2 (Div 1, 2)
- Transmitter with integrated DSL	Zone 2 (Div 2)
- External DSL	Zone 0, 1, 2 (Div 1)

Certificates	
CE conformity marking	• Low voltage directive • WEEE • RoHS
EMC performance	
Emission	CISPR 11:2009/A1:2010 and EN 55011:2009/A1:2010
Immunity	IEC/EN 61326-1:2013

Dimensional drawing

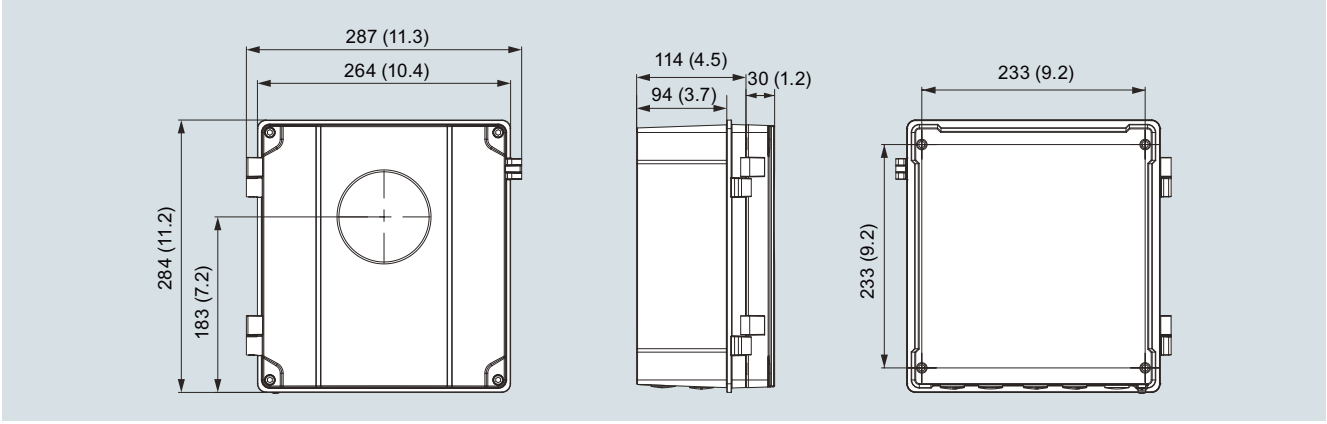

SITRANS FST030, wall mount version, dimensions in mm (inch)

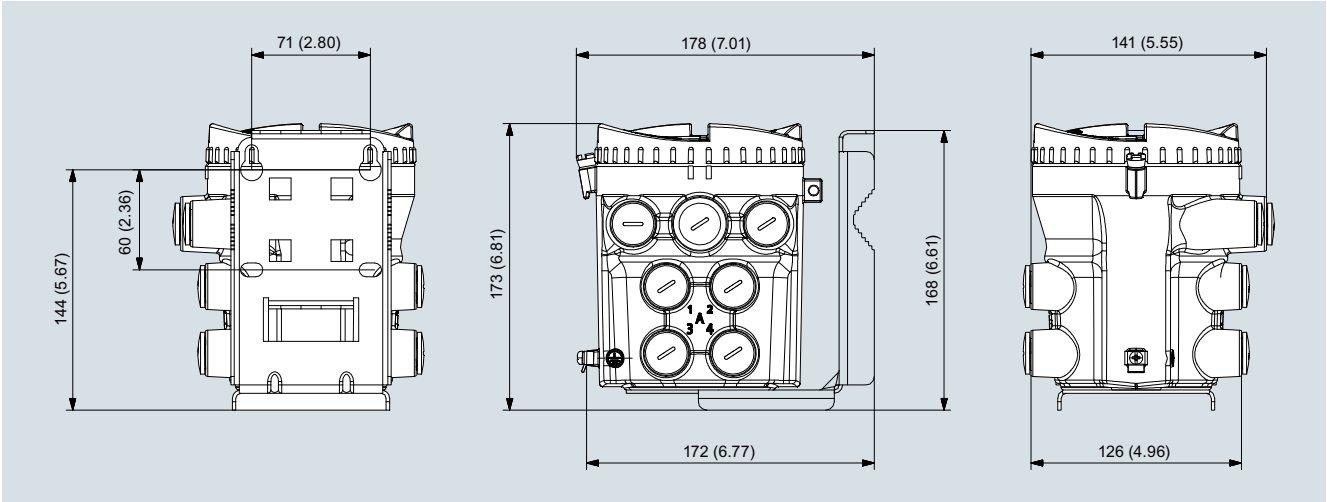

External DSL, dimensions in mm (inch)

© Siemens 2021

Selection and ordering data

	Article No.
SITRANS FS230 clamp-on flowmeter ↗	**7ME37** -
↗ Click on the Article No. for the online configuration in the PIA Life Cycle Portal.	
Transmitter model	
Transmitter FST030	**3**
Pipe material/temperature	
Transmitter only - no sensor	**0**
Steel (stainless steel, carbon steel), temperature range: best use < 80 °C (176 °F)	**1**
Steel (stainless steel, carbon steel), temperature range: best use > 80 °C (176 °F)	**2**
Plastic (PVC) (for gas applications), temperature: -40 ... 65.5 °C (-40 ... 150 °F)	**4**
Plastic (PVC) (for liquid applications), temperature: -40 ... +121 °C (-40 ... 250 °F)	**6**
Any material, temperature: -40 ... +121 °C (-40 ... 250 °F)	**7**
Any material, very high temperature: -40 ... +230 °C (-40 ... 446 °F)	**8**
Pipe outer diameter range	
Transmitter only - no sensor	**A**
13 ... 19 mm (0.5 ... 0.75")	**B**
19.3 ... 30.5 mm (0.76 ... 1.20")	**C**
30.7 ... 50.8 mm (1.21 ... 2.00")	**D**
51 ... 76 mm (2.01 ... 3.00")	**E**
78 ... 127 mm (3.1 ... 5.0")	**F**
129 ... 203 mm (5.1 ... 8.0")	**G**
206 ... 305 mm (8.1 ... 12.0")	**H**
307 ... 508 mm (12.1 ... 20.0")	**J**
510 ... 813 mm (20.1 ... 32.0")	**K**
815 ... 9144 mm (32.1 ... 360")	**L**
Pipe wall thickness range	
Transmitter only - no sensor	**A**
0.635 ... 1.016 mm (0.025 ... 0.04")	**B**
1.016 ... 1.524 mm (0.04 ... 0.06")	**C**
1.524 ... 2.032 mm (0.06 ... 0.08")	**D**
2.032 ... 3.048 mm (0.08 ... 0.12")	**E**
3.048 ... 4.064 mm (0.12 ... 0.16")	**F**
4.064 ... 5.842 mm (0.16 ... 0.23")	**G**
5.842 ... 8.128 mm (0.23 ... 0.32")	**H**
8.128 ... 11.176 mm (0.32 ... 0.44")	**J**
11.176 ... 15.748 mm (0.44 ... 0.62")	**K**
15.748 ... 31.75 mm (0.62 ... 1.25")	**L**
31.75 ... 50.8 mm (1.25 ... 2.00")	**M**
Sensor mounting	
Transmitter only - no sensor	**0**
Mounting straps only	**1**
Standard frames and tracks	**2**
Magnetic - no straps	**4**
Magnetic - with straps	**6**
High precision mount (single enclosure)	**7**
High precision mount (dual enclosure)	**8**
Number of paths (sensor pairs)	
Transmitter only - no sensor	**0**
One path	**1**
Two path	**2**
Three path	**3**
Four path	**4**

	Article No.
SITRANS FS230 clamp-on flowmeter	**7ME37** -
Environment	
Standard	**1**
Transmitter/DSL material and mounting style	
Replacement DSL for option V transmitter, no transmitter DSL: aluminium cast, Nema 4X, M12 socket for DSL to transmitter interconnect cable	**N**
Replacement DSL for option W transmitter, no transmitter DSL: aluminium cast, Nema 4X, terminal block for DSL to transmitter interconnect cable	**Q**
Wallmount transmitter, internal DSL Transmitter: aluminum wallbox, Nema 4X DSL: none, direct connected sensor cables (max 2-path, max. 20 meter sensor cable)	**U**
Wall box housing, external DSL, remote to sensor Transmitter: aluminum wallbox, Nema 4X DSL: aluminum cast, Nema 4X, M12 socket for DSL to transmitter interconnect cable (max 4-path, max. 20 meter sensor cable, max. 150 meter interconnect cable)	**V**
Wall box housing, external DSL, remote to sensor Transmitter: aluminum wall box, Nema 4X DSL: aluminum cast, Nema 4X, terminal block for DSL to transmitter interconnect cable (max. 4-path, max. 20 meter sensor cable, max. 150 meter interconnect cable)	**W**
Ex approvals	
Non-Ex	**A**
ATEX, wallbox enclosure	**B**
IECEx, wallbox	**E**
FM, FMc, wallbox enclosure	**G**
ATEX, IECEx, FM, FMc, wallbox	**P**
Local User Interface	
Blind version transmitter	**1**
Graphical local user interface, 240 x 160 pixels	**3**

© Siemens 2021

Selection and ordering data for SITRANS FS230

Selection and ordering data	Order code
Further designs	
Please add **"-Z"** to Article No. and specify Order code(s) and plain text.	
Cable glands - transmitter, DSL (not for sensor cables)	
No glands, metric threads on transmitter	**A01**
No glands, metric thread with NPT thread adapters, nickel plated brass: quantity based on selection "N" in data place 14	**A40**
No glands, metric thread with NPT thread adapters, stainless steel: quantity based on selection "N" in data place 14	**A41**
Nickel plated brass glands: quantity based on selection "N" in data place 14	**A42**
Plastic glands: quantity based on selection "N" in data place 14	**A44**
Stainless steel glands: quantity based on selection "N" in data place 14	**A46**
No glands, metric thread with NPT thread adapters, nickel plated brass: quantity based on selection "Q" in data place 14	**A50**
No glands, metric thread with NPT thread adapters, stainless steel: quantity based on selection "Q" in data place 14	**A51**
Nickel plated brass glands: quantity based on selection "Q" in data place 14	**A52**
Plastic glands: quantity based on selection "Q" in data place 14	**A54**
Stainless steel glands: quantity based on selection "Q" in data place 14	**A56**
No glands, metric thread with NPT thread adapters, stainless steel: quantity based on selection "U" in data place 14	**A60**
No glands, metric thread with NPT thread adapters, nickel plated brass: quantity based on selection "U" in data place 14	**A61**
Nickel plated brass glands: quantity based on selection "U" in data place 14	**A62**
Plastic glands: quantity based on selection "U" in data place 14	**A64**
Stainless steel glands: quantity based on selection "U" in data place 14	**A66**
No glands, metric thread with NPT thread adapters, nickel plated brass: quantity based on selection "V" in data place 14	**A70**
No glands, metric thread with NPT thread adapters, stainless steel: quantity based on selection "V" in data place 14	**A71**
Nickel plated brass glands: quantity based on selection "V" in data place 14	**A72**
Plastic glands: quantity based on selection "V" in data place 14	**A74**
Stainless steel glands: quantity based on selection "V" in data place 14	**A76**
No glands, metric thread with NPT thread adapters, nickel plated brass: quantity based on selection "W" in data place 14	**A80**
No glands, metric thread with NPT thread adapters, stainless steel: Quantity based on selection "W" in data place 14	**A81**
Nickel plated brass glands: quantity based on selection "W" in data place 14	**A82**
Plastic glands: quantity based on selection "W" in data place 14	**A84**
Stainless steel glands: quantity based on selection "W" in data place 14	**A86**

	Order code
Software functions and CT approvals	
Software: for standard industry applications	**B11**
Software including hydrocarbon process values	**B39**
Software including gas process values	**B50**
I/O configuration Ch1	
Non-Ex, 4 ... 20 mA HART, menu selected passive/active	**E02**
Ex, 4 ... 20 mA HART, active	**E06**
Ex, 4 ... 20 mA HART, passive	**E07**
Modbus RTU 485	**E14**
I/O configuration Ch2, Ch3 and Ch4	
None	**F00**
Non-Ex	
• Ch2: current/freq./pulse, Ch3: none Ch4: none. Active/passive menu selected	**F01**
• Ch2: current/freq./pulse, Ch3: current/freq./pulse Ch4: none. Active/passive menu selected	**F02**
• Ch2:current/freq./pulse, Ch3: current/freq./pulse Ch4:current/freq./pulse. Active/passive menu selected	**F03**
• Ch2:current/freq./pulse, Ch3: current/freq./pulse Ch4: relay. Active/passive menu selected	**F04**
• Ch2: current/freq./pulse, Ch3: relay Ch4: relay. Active/passive menu selected	**F05**
• Ch2: current/freq./pulse, Ch3: relay Ch4: none. Active/passive menu selected	**F06**
Ex Active	
• Ch2: current/freq./pulse, Ch3: none Ch4: none	**F11**
• Ch2: current/freq./pulse, Ch3: current/freq./pulse Ch4: none	**F12**
• Ch2: current/freq./pulse, Ch3: current/freq./pulse Ch4: current/freq./pulse	**F13**
• Ch2: current/freq./pulse, Ch3: current/freq./pulse, Ch4: relay	**F14**
• Ch2: current/freq./pulse, Ch3: relay, Ch4: relay	**F15**
• Ch2: current/freq./pulse, Ch3: relay, Ch4: none	**F16**
Ex Passive	
• Ch2: current/freq./pulse, Ch3: none, Ch4: none	**F21**
• Ch2: current/freq./pulse, Ch3: current/freq./pulse Ch4: None	**F22**
• Ch2:current/freq./pulse, Ch3: current/freq./pulse Ch4:current/freq./pulse	**F23**
• Ch2: current/freq./pulse, Ch3: current/freq./pulse Ch4: relay	**F24**
• Ch2: current/freq./pulse, Ch3: relay, Ch4: relay	**F25**
• Ch2: current/freq./pulse, Ch3: relay, Ch4: none	**F26**
DSL strap kit (to strap DSL to pipe)	
• 60.3 mm (2 inch) pipe mount with U-bolts	**G01**
• Stainless steel strap to mount DSL to pipe DN 60 ... 150 pipe size (2 ... 6 inch)	**G03**
• Stainless steel strap to mount DSL to pipe DN 150 ... 300 (6 ... 12 inch)	**G05**
• Stainless steel strap to mount DSL to pipe DN 300 ... 400 (12 ... 16 inch)	**G07**
• Stainless steel strap to mount DSL to pipe DN 400 ... 600 (16 ... 24 inch)	**G08**
Temperature sensors and pockets	
1000 Ω platinum standard clamp-on RTD	**J61**
1000 Ω platinum submersible clamp-on RTD	**J62**

© Siemens 2021

Selection and ordering data	Order code
Sensor cables to transmitter/DSL for 1-path	
1 m (3.2 ft) standard/submersible coax sensor cable pair with nylon glands	**K21**
3 m (9.8 ft) standard/submersible coax sensor cable pair with nylon glands	**K22**
5 m (16.4 ft) standard/submersible coax sensor cable pair with nylon glands	**K23**
10 m (32.8 ft) standard/submersible coax sensor cable pair with nylon glands	**K24**
20 m (65.6 ft) standard/submersible coax sensor cable pair with nylon glands	**K25**
1 m (3.2 ft) standard/submersible coax sensor cable pair with nickel plated brass glands	**K26**
3 m (9.8 ft) standard/submersible coax sensor cable pair with nickel plated brass glands	**K27**
5 m (16.4 ft) standard/submersible coax sensor cable pair with nickel plated brass glands	**K28**
10 m (32.8 ft) standard/submersible coax sensor cable pair with nickel plated brass glands	**K29**
20 m (65.6 ft) standard/submersible coax sensor cable pair with nickel plated brass glands	**K30**
1 m (3.2 ft) standard/submersible coax sensor cable pair with stainless steel glands	**K31**
3 m (9.8 ft) standard/submersible coax sensor cable pair with stainless steel glands	**K32**
5 m (16.4 ft) standard/submersible coax sensor cable pair with stainless steel glands	**K33**
10 m (32.8 ft) standard/submersible coax sensor cable pair with stainless steel glands	**K34**
20 m (65.6 ft) standard/submersible coax sensor cable pair with stainless steel glands	**K35**
5 m (16.4 ft) plenum rated coax sensor cable pair with nylon glands	**K36**
20 m (65.6 ft) plenum rated coax sensor cable pair with nylon glands	**K37**
5 m (16.4 ft) plenum rated coax sensor cable pair with nickel plated brass glands	**K38**
20 m (65.6 ft) plenum rated coax sensor cable pair with nickel plated brass glands	**K39**
5 m (16.4 ft) plenum rated coax sensor cable pair with stainless steel glands	**K40**
20 m (65.6 ft) plenum rated coax sensor cable pair with stainless steel glands	**K41**
1 m (3.2 ft) armored sensor cable pair with nickel plated brass glands. Temperature: -25 ... +80 C	**K50**
3 m (9.8 ft) armored sensor cable pair with nickel plated brass glands. Temperature: -25 ... +80 C	**K51**
5 m (16.4 ft) armored sensor cable pair with nickel plated brass glands. Temperature: -25 ... +80 C	**K52**
10 m (32.8 ft) armored sensor cable pair with nickel plated brass glands	**K53**
20 m (65.6 ft) armored sensor cable pair with nickel plated brass glands	**K54**
10 m (32.8 ft) standard/submersible coax sensor cable pair with no transmitter glands	**K76**
20 m (65.6 ft) standard/submersible coax sensor cable pair with no transmitter glands	**K77**
20 m (65.6 ft) plenum rated coax sensor cable pair with no glands	**K78**

	Order code
Sensor cables to transmitter/DSL for 2-path	
1 m (3.2 ft) standard/submersible coax sensor cable pair with nylon glands	**T21**
3 m (9.8 ft) standard/submersible coax sensor cable pair with nylon glands	**T22**
5 m (16.4 ft) standard/submersible coax sensor cable pair with nylon glands	**T23**
10 m (32.8 ft) standard/submersible coax sensor cable pair with nylon glands	**T24**
20 m (65.6 ft) standard/submersible coax sensor cable pair with nylon glands	**T25**
1 m(3.2 ft) standard/submersible coax sensor cable pair with nickel plated brass glands	**T26**
3 m (9.8 ft) standard/submersible coax sensor cable pair with nickel plated brass glands	**T27**
5 m (16.4 ft) standard/submersible coax sensor cable pair with nickel plated brass glands	**T28**
10 m (32.8 ft) standard/submersible coax sensor cable pair with nickel plated brass glands	**T29**
20 m (65.6 ft) standard/submersible coax sensor cable pair with nickel plated brass glands	**T30**
1 m (3.2 ft) standard/submersible coax sensor cable pair with stainless steel glands	**T31**
3 m (9.8 ft) standard/submersible coax sensor cable pair with stainless steel glands	**T32**
5 m (16.4 ft) standard/submersible coax sensor cable pair with stainless steel glands	**T33**
10 m (32.8 ft) standard/submersible coax sensor cable pair with stainless steel glands	**T34**
20 m (65.6 ft) standard/submersible coax sensor cable pair with stainless steel glands	**T35**
5 m (16.4 ft) plenum rated coax sensor cable pair with nylon glands	**T36**
20 m (65.6 ft) plenum rated coax sensor cable pair with nylon glands	**T37**
5 m (16.4 ft) plenum rated coax sensor cable pair with nickel plated brass glands	**T38**
20 m (65.6 ft) plenum rated coax sensor cable pair with nickel plated brass glands	**T39**
5 m (16.4 ft) plenum rated coax sensor cable pair with stainless steel glands	**T40**
20 m (65.6 ft) plenum rated coax sensor cable pair with stainless steel glands	**T41**
1 m (3.2 ft) armored sensor cable pair with nickel plated brass glands. Temperature: -25 ... +80 C	**T50**
3 m (9.8 ft) armored sensor cable pair with nickel plated brass glands. Temperature: -25 ... +80 C	**T51**
5 m (16.4 ft) armored sensor cable pair with nickel plated brass glands. Temperature: -25 ... +80 C	**T52**
10 m (32.8 ft) armored sensor cable pair with nickel plated brass glands	**T53**
20 m (65.6 ft) armored sensor cable pair with nickel plated brass glands	**T54**
10 m (32.8 ft) standard/submersible coax sensor cable pair with no transmitter glands	**T76**
20 m (65.6 ft) standard/submersible coax sensor cable pair with no transmitter glands	**T77**
20 m (65.6 ft) plenum rated coax sensor cable pair with no glands	**T78**

© Siemens 2021

Selection and ordering data for SITRANS FS230

Selection and ordering data	Order code
Sensor cables to transmitter/DSL for 3-path	
1 m (3.2 ft) standard/submersible coax sensor cable pair with nylon glands	**U21**
3 m (9.8 ft) standard/submersible coax sensor cable pair with nylon glands	**U22**
5 m (16.4 ft) standard/submersible coax sensor cable pair with nylon glands	**U23**
10 m (32.8 ft) standard/submersible coax sensor cable pair with nylon glands	**U24**
20 m (65.6 ft) standard/submersible coax sensor cable pair with nylon glands	**U25**
1 m (3.2 ft) standard/submersible coax sensor cable pair with nickel plated brass glands	**U26**
3 m (9.8 ft) standard/submersible coax sensor cable pair with nickel plated brass glands	**U27**
5 m (16.4 ft) standard/submersible coax sensor cable pair with nickel plated brass glands	**U28**
10 m (32.8 ft) standard/submersible coax sensor cable pair with nickel plated brass glands	**U29**
20 m (65.6 ft) standard/submersible coax sensor cable pair with nickel plated brass glands	**U30**
1 m (3.2 ft) standard/submersible coax sensor cable pair with stainless steel glands	**U31**
3 m (9.8 ft) standard/submersible coax sensor cable pair with stainless steel glands	**U32**
5 m (16.4 ft) standard/submersible coax sensor cable pair with stainless steel glands	**U33**
10 m (32.8 ft) standard/submersible coax sensor cable pair with stainless steel glands	**U34**
20 m (65.6 ft) standard/submersible coax sensor cable pair with stainless steel glands	**U35**
5 m (16.4 ft) plenum rated coax sensor cable pair with nylon glands	**U36**
20 m (65.6 ft) plenum rated coax sensor cable pair with nylon glands	**U37**
5 m (16.4 ft) plenum rated coax sensor cable pair with nickel plated brass glands	**U38**
20 m (65.6 ft) plenum rated coax sensor cable pair with nickel plated brass glands	**U39**
5 m (16.4 ft) plenum rated coax sensor cable pair with stainless steel glands	**U40**
20 m (65.6 ft) plenum rated coax sensor cable pair with stainless steel glands	**U41**
1 m (3.2 ft) armored sensor cable pair with nickel plated brass glands. Temperature: -25 ... +80 C	**U50**
3 m (9.8 ft) armored sensor cable pair with nickel plated brass glands. Temperature: -25 ... +80 C	**U51**
5 m (16.4 ft) armored sensor cable pair with nickel plated brass glands. Temperature: -25 ... +80 C	**U52**
10 m (32.8 ft) armored sensor cable pair with nickel plated brass glands	**U53**
20 m (65.6 ft) armored sensor cable pair with nickel plated brass glands	**U54**
10 m (32.8 ft) standard/submersible coax sensor cable pair with no transmitter glands	**U76**
20 m (65.6 ft) standard/submersible coax sensor cable pair with no transmitter glands	**U77**
20 m (65.6 ft) plenum rated coax sensor cable pair with no glands	**U78**

	Order code
Sensor cables to transmitter/DSL for 4-path	
1 m (3.2 ft) standard/submersible coax sensor cable pair with nylon glands	**V21**
3 m (9.8 ft) standard/submersible coax sensor cable pair with nylon glands	**V22**
5 m (16.4 ft) standard/submersible coax sensor cable pair with nylon glands	**V23**
10 m (32.8 ft) standard/submersible coax sensor cable pair with nylon glands	**V24**
20 m (65.6 ft) standard/submersible coax sensor cable pair with nylon glands	**V25**
1 m (3.2 ft) standard/submersible coax sensor cable pair with nickel plated brass glands	**V26**
3 m (9.8 ft) standard/submersible coax sensor cable pair with nickel plated brass glands	**V27**
5 m (16.4 ft) standard/submersible coax sensor cable pair with nickel plated brass glands	**V28**
10 m (32.8 ft) standard/submersible coax sensor cable pair with nickel plated brass glands	**V29**
20 m (65.6 ft) standard/submersible coax sensor cable pair with nickel plated brass glands	**V30**
1 m (3.2 ft) standard/submersible coax sensor cable pair with stainless steel glands	**V31**
3 m (9.8 ft) standard/submersible coax sensor cable pair with stainless steel glands	**V32**
5 m (16.4 ft) standard/submersible coax sensor cable pair with stainless steel glands	**V33**
10 m (32.8 ft) standard/submersible coax sensor cable pair with stainless steel glands	**V34**
20 m (65.6 ft) standard/submersible coax sensor cable pair with stainless steel glands	**V35**
5 m (16.4 ft) plenum rated coax sensor cable pair with nylon glands	**V36**
20 m (65.6 ft) plenum rated coax sensor cable pair with nylon glands	**V37**
5 m (16.4 ft) plenum rated coax sensor cable pair with nickel plated brass glands	**V38**
20 m (65.6 ft) plenum rated coax sensor cable pair with nickel plated brass glands	**V39**
5 m (16.4 ft) plenum rated coax sensor cable pair with stainless steel glands	**V40**
20 m (65.6 ft) plenum rated coax sensor cable pair with stainless steel glands	**V41**
1 m (3.2 ft) armored sensor cable pair with nickel plated brass glands. Temperature: -25 ... +80 C	**V50**
3 m (9.8 ft) armored sensor cable pair with nickel plated brass glands. Temperature: -25 ... +80 C	**V51**
5 m (16.4 ft) armored sensor cable pair with nickel plated brass glands. Temperature: -25 ... +80 C	**V52**
10 m (32.8 ft) armored sensor cable pair with nickel plated brass glands	**V53**
20 m (65.6 ft) armored sensor cable pair with nickel plated brass glands	**V54**
10 m (32.8 ft) standard/submersible coax sensor cable pair with no transmitter glands	**V76**
20 m (65.6 ft) standard/submersible coax sensor cable pair with no transmitter glands	**V77**
20 m (65.6 ft) plenum rated coax sensor cable pair with no glands	**V78**

© Siemens 2021

Selection and ordering data	Order code
Cable, DSL to wallbox transmitter	
5 m (16.4 ft) standard DSL cable (2 mounted M12 plugs)	**L51**
5 m (16.4 ft) standard DSL cable (no plugs mounted)	**L52**
10 m (32.8 ft) standard DSL cable (2 mounted M12 plugs)	**L55**
10 m (32.8 ft) standard DSL cable (no plugs mounted)	**L56**
25 m (82 ft) standard DSL cable (2 mounted plugs)	**L59**
25 m (82 ft) standard DSL cable (no plugs mounted)	**L60**
50 m (164 ft) standard DSL cable (2 mounted plugs)	**L63**
50 m (164 ft) standard DSL cable (no plugs mounted)	**L64**
75 m (246.1 ft) standard DSL cable (2 mounted plugs)	**L67**
75 m (246.1 ft) standard DSL cable (no plugs mounted)	**L68**
150 m (492.1 ft) standard DSL cable (2 mounted plugs)	**L71**
150 m (492.1 ft) standard DSL cable (no plugs mounted)	**L72**
RTD cable (clamp temperature sensor to transmitter)	
6 m (20 ft) standard RTD cable	**R50**
15 m (50 ft) standard RTD cable	**R51**
30 m (100 ft) standard RTD cable	**R52**
46 m (150 ft) standard RTD cable	**R53**
61 m (200 ft) standard RTD cable	**R54**
91 m (300 ft) standard RTD cable	**R55**
6 m (20 ft) submersible RTD cable	**R56**
15 m (50 ft) submersible RTD cable	**R57**
30 m (100 ft) submersible RTD cable	**R58**
46 m (150 ft) submersible RTD cable	**R59**
61 m (200 ft) submersible RTD cable	**R60**
91 m (300 ft) submersible RTD cable	**R61**

	Order code
RTD cable (insert temperature sensor to transmitter)	
15 m (50 ft) RTD cable with nickel plated gland	**R74**
15 m (50 ft) RTD cable with stainless steel gland	**R75**
30 m (100 ft) RTD cable with nickel plated gland	**R76**
30 m (100 ft) RTD cable with stainless steel gland	**R77**
91 m (300 ft) RTD cable with nickel plated gland	**R78**
91 m (300 ft) RTD cable with stainless steel gland	**R79**
15 m (50 ft) insert RTD cable with nickel plated gland	**R80**
15 m (50 ft) insert RTD cable with stainless steel gland	**R81**
30 m (100 ft) insert RTD cable with nickel plated gland	**R82**
30 m (100 ft) insert RTD cable with stainless steel gland	**R83**
91 m (300 ft) insert RTD cable with nickel plated gland	**R84**
91 m (300 ft) insert RTD cable with stainless steel gland	**R85**
Mass storage	
Enable mass storage function for SD card (not available for USA)	**S30**
Tag plate	
Tag plate for external DSL, stainless steel	**Y14**
Tag plate for transmitter, stainless steel	**Y15**
Tag name plate, stainless steel	**Y17**

© Siemens 2021

Selection and ordering data for SITRANS FS230

Selection and ordering data	Article No.
System spare parts	
Tool kits andand loose parts	
"F" connector tool kit, 2 per	**A5E38145699**
Bag of loose spare parts; for wallmount, including cable strain relief components, mounting tool, seals and gasket, assorted screws and washers, hex cap nut, blind plugs, and O-rings	**A5E38288072**
Electronics assemblies and modules	
Wall mount transmitter	
• Display and keypad assembly	**A5E37697615**
• Digital Sensor Link (DSL), internal, module only, for wall box, standard process values	**A5E38014726**
• Digital Sensor Link (DSL), internal, module only, for wall box, hydrocarbon process values	**A5E42138542**
• Digital Sensor Link (DSL), internal, module only, for wall box, gas process values	**A5E47202379**
• SensorFlash (4 GB micro SD card) -40 °C … +85 °C	**A5E38288507**
• Power supply, for wall box, (240 V AC, 47 ... 63 Hz), (24 ... 90 V DC)	**A5E38263021**
• Foam insert for wall box with connectors	**A5E38287828**
External DSL	
• Digital Sensor Link (DSL), external, module only, standard process values	**A5E38014662**
• Digital Sensor Link (DSL), external, module only, hydrocarbon process values	**A5E37843869**
• Digital Sensor Link (DSL), external, module only, gas process values	**A5E47202369**
• F connector board set: board A, board B and screws for mounting	**A5E45882316**
• Front end module cover plate with screws for mounting	**A5E45882046**
Cassettes, I/O configuration and communication	
Ex	
• Ch1: I/O and comm (active) 4 ... 20 mA output and HART 7.2	**A5E38012278**
• Ch1: I/O and comm (passive) 4 ... 20 mA output and HART 7.2	**A5E38013025**
• Ch1: communication Modbus RTU 485	**A5E38013054**
Non Ex	
• Ch1: I/O and comm (active/passive) 4 ... 20 mA output and HART 7.2	**A5E38013040**
• Ch1: communication Modbus RTU 485	**A5E38013069**
• Ch2: current/freq./pulse, Ch3: None Ch4: none. Menu select active/passive	**A5E38006256**
• Ch2: current/freq./pulse, Ch3: current/freq./pulse Ch4: none. Menu select active/passive	**A5E38006558**
• Ch2: current/freq./pulse, Ch3: current/freq./pulse Ch4: current/Freq./Pulse. Menu select active/passive	**A5E38006598**
• Ch2: current/freq./pulse, Ch3: current/freq./pulse Ch4: relay. Menu select active/passive	**A5E38006896**
• Ch2: current/freq./pulse, Ch3: relay Ch4: relay. Menu select active/passive	**A5E38006900**
• Ch2: current/freq./pulse, Ch3: relay Ch4: none. Menu select active/passive	**A5E38011432**
Ex Active	
• Ch2: current/freq./pulse, Ch3: None Ch4: none	**A5E38012039**
• Ch2: current/freq./pulse, Ch3: current/freq./pulse Ch4: none	**A5E38012056**
• Ch2: current/freq./pulse, Ch3: current/freq./pulse Ch4: current/freq./pulse	**A5E38012121**
• Ch2: current/freq./pulse, Ch3: current/freq./pulse Ch4: relay	**A5E38019235**
• Ch2: current/freq./pulse, Ch3: relay Ch4: relay	**A5E38019263**
• Ch2: current/freq./pulse, Ch3: relay Ch4: none	**A5E38019378**
Ex Passive	
• Ch2: current/freq./pulse, Ch3: none Ch4: none	**A5E38011478**
• Ch2: current/freq./pulse, Ch3: current/freq./pulse Ch4: none	**A5E38011509**
• Ch2: current/freq./pulse, Ch3: current/freq./pulse Ch4: current/freq./pulse	**A5E38011541**
• Ch2: current/freq./pulse, Ch3: current/freq./pulse Ch4: relay	**A5E38011600**
• Ch2: current/freq./pulse, Ch3: relay Ch4: relay	**A5E38011618**
• Ch2: current/freq./pulse, Ch3: relay Ch4: none	**A5E38011908**
Miscellaneous parts	
General	
• Blind plug brass-nickel 10 pcs (Ex version)	**A5E38145685**
• Blind plug stainless steel 10 pcs (Ex version)	**A5E38145689**
• F connectors, 4 pcs	**A5E38268608**
• M12 adapter for DSL or wall mounted transmitter	**A5E03906095**
Wall mount transmitter	
• Wall bracket "pipe mounting"	**A5E38288020**
• Wall bracket "panel mounting	**A5E38288032**
• Metal kit: PSU cover, back plane	**A5E38415145**
• Power input cover plate	**A5E38415205**
External DSL	
• Wall mount bracket and screws for mounting DSL on bracket	**A5E45882610**
• Lid with O-ring	**A5E45818351**
• Bag with parts: cable strain reliefs, screws and washers, lid lock screw, grounding parts	**A5E38111577**
• Accessory pipe mount kit for 60.3 mm (2.375 inch) pipe	**A5E36617118006**
• Accessory pipe strap kit for DN 50 ... 150 (2 ... 6 inch) pipe	**A5E36617118007**
• Accessory pipe strap kit for DN 150 ... 300 (6 ... 12 inch) pipe	**A5E36617118008**
• Accessory pipe strap kit for DN 300 ... 400(12 ... 16 inch) pipe	**A5E36617118009**
• Accessory pipe strap kit for DN 400 ... 600(16 ... 24 inch) pipe	**A5E36617118010**

© Siemens 2021

Selection and ordering data (continued)

Article No./Sensor Crossreference

Steel (T1)			Steel (T2)			Plastic (liquid)		
Data place 8,9,10 of 7ME372.-... combination	Sensor part number	Sensor Size Code	Data place 8,9,10 of 7ME372.-... combination	Sensor part number	Sensor Size Code	Data place 8,9,10 of 7ME372.-... combination	Sensor part number	Sensor Size Code
1BB	7ME3950-5LG01	A1HT1	**2BB**	7ME3950-5LB11	A1	**6BB**	7ME3950-5LB01	A2
1BC	7ME3950-5LH01	A2HT1	**2BC**	7ME3950-5LB01	A2	**6BC**	7ME3950-5LB01	A2
1BD	7ME3950-5LB11	A1	**2BD**	7ME3950-5LB11	A1	**6BD**	7ME3950-5LB01	A2
1BE	7ME3950-5LB01	A2	**2BE**	7ME3950-5LB01	A2	**6BE**	7ME3950-5LB01	A2
1BF	7ME3950-5LB11	A1	**2BF**	7ME3950-5LB11	A1	**6BF**	7ME3950-5LB01	A2
1CB	7ME3950-5LG01	A1HT1	**2CB**	7ME3950-5LB11	A1	**6CB**	7ME3950-5LB01	A2
1CC	7ME3950-5LH01	A2HT1	**2CC**	7ME3950-5LB01	A2	**6CC**	7ME3950-5LB01	A2
1CD	7ME3950-5LJ01	A3HT1	**2CD**	7ME3950-5LB11	A1	**6CD**	7ME3950-5LB01	A2
1CE	7ME3950-5GK01	B1HT1	**2CE**	7ME3950-5GK21	B1HT2	**6CE**	7ME3950-5LB01	A2
1CF	7ME3950-5LB11	A1	**2CF**	7ME3950-5LB11	A1	**6CF**	7ME3950-5LB01	A2
1CG	7ME3950-5LB11	A1	**2CG**	7ME3950-5LB11	A1	**6CG**	7ME3950-5LB01	A2
1DB	7ME3950-5LG01	A1HT1	**2DB**	7ME3950-5LC11	B1	**6DC**	7ME3950-5LC01	B3
1DC	7ME3950-5LH01	A2HT1	**2DC**	7ME3950-5LC21	B2	**6DD**	7ME3950-5LC01	B3
1DD	7ME3950-5LJ01	A3HT1	**2DD**	7ME3950-5LC11	B1	**6DE**	7ME3950-5LC01	B3
1DE	7ME3950-5GK01	B1HT1	**2DE**	7ME3950-5GK21	B1HT2	**6DF**	7ME3950-5LC01	B3
1DF	7ME3950-5GL01	B2HT1	**2DF**	7ME3950-5GL21	B2HT2	**6DG**	7ME3950-5LC01	B3
1DG	7ME3950-5LC01	B3	**2DG**	7ME3950-5LC01	B3	**6DH**	7ME3950-5LC01	B3
1DH	7ME3950-5LC21	B2	**2DH**	7ME3950-5LC21	B2	**6EC**	7ME3950-5LC01	B3
1EB	7ME3950-5LG01	A1HT1	**2EB**	7ME3950-5LC11	B1	**6ED**	7ME3950-5LC01	B3
1EC	7ME3950-5LH01	A2HT1	**2EC**	7ME3950-5LC21	B2	**6EE**	7ME3950-5LC01	B3
1ED	7ME3950-5LJ01	A3HT1	**2ED**	7ME3950-5LC11	B1	**6EF**	7ME3950-5LC01	B3
1EE	7ME3950-5GK01	B1HT1	**2EE**	7ME3950-5GK21	B1HT2	**6EG**	7ME3950-5LC01	B3
1EF	7ME3950-5GL01	B2HT1	**2EF**	7ME3950-5GL21	B2HT2	**6EH**	7ME3950-5LC01	B3
1EG	7ME3950-5GM00	C1HT1	**2EG**	7ME3950-5GM20	C1HT2	**6EJ**	7ME3950-5LC01	B3
1EH	7ME3950-5GN00	C2HT1	**2EH**	7ME3950-5GN20	C2HT2	**6EK**	7ME3950-5LC01	B3
1EJ	7ME3950-5LC01	B3	**2EJ**	7ME3950-5LC01	B3	**6FE**	7ME3950-5LD00	C3
1EK	7ME3950-5LC01	B3	**2EK**	7ME3950-5LC01	B3	**6FF**	7ME3950-5LD00	C3
1FC	7ME3950-5LH01	A2HT1	**2FC**	7ME3950-5LD10	C1	**6FG**	7ME3950-5LD00	C3
1FD	7ME3950-5LJ01	A3HT1	**2FD**	7ME3950-5LD10	C1	**6FH**	7ME3950-5LD00	C3
1FE	7ME3950-5GK01	B1HT1	**2FE**	7ME3950-5GK21	B1HT2	**6FJ**	7ME3950-5LD00	C3
1FF	7ME3950-5GL01	B2HT1	**2FF**	7ME3950-5GL21	B2HT2	**6FK**	7ME3950-5LD00	C3
1FG	7ME3950-5GM00	C1HT1	**2FG**	7ME3950-5GM20	C1HT2	**6GF**	7ME3950-5LD00	C3
1FH	7ME3950-5GN00	C2HT1	**2FH**	7ME3950-5GN20	C2HT2	**6GG**	7ME3950-5LD00	C3
1FJ	7ME3950-5GP00	D1HT1	**2FJ**	7ME3950-5GP20	D1HT2	**6GH**	7ME3950-5LD00	C3
1FK	7ME3950-5LD10	C1	**2FK**	7ME3950-5LD10	C1	**6GJ**	7ME3950-5LD00	C3
1GD	7ME3950-5LJ01	A3HT1	**2GD**	7ME3950-5LD10	C1	**6GK**	7ME3950-5LD00	C3
1GE	7ME3950-5GK01	B1HT1	**2GE**	7ME3950-5GK21	B1HT2	**6GL**	7ME3950-5LD00	C3
1GF	7ME3950-5GL01	B2HT1	**2GF**	7ME3950-5GL21	B2HT2	**6HG**	7ME3950-5LE00	D3
1GG	7ME3950-5GM00	C1HT1	**2GG**	7ME3950-5GM20	C1HT2	**6HH**	7ME3950-5LE00	D3
1GH	7ME3950-5GN00	C2HT1	**2GH**	7ME3950-5GN20	C2HT2	**6HJ**	7ME3950-5LE00	D3
1GJ	7ME3950-5GP00	D1HT1	**2GJ**	7ME3950-5GP20	D1HT2	**6HK**	7ME3950-5LE00	D3
1GK	7ME3950-5GQ00	D2HT1	**2GK**	7ME3950-5GQ20	D2HT2	**6HL**	7ME3950-5LE00	D3
1GL	7ME3950-5LD00	C3	**2GL**	7ME3950-5LD00	C3	**6HM**	7ME3950-5LE00	D3
1HE	7ME3950-5GK01	B1HT1	**2HE**	7ME3950-5GK21	B1HT2	**6JJ**	7ME3950-5LE00	D3
1HF	7ME3950-5GL01	B2HT1	**2HF**	7ME3950-5GL21	B2HT2	**6JK**	7ME3950-5LE00	D3
1HG	7ME3950-5GM00	C1HT1	**2HG**	7ME3950-5GM20	C1HT2	**6JL**	7ME3950-5LE00	D3
1HH	7ME3950-5GN00	C2HT1	**2HH**	7ME3950-5GN20	C2HT2	**6JM**	7ME3950-5LE00	D3
1HJ	7ME3950-5GP00	D1HT1	**2HJ**	7ME3950-5GP20	D1HT2	**6KK**	7ME3950-5LF00	E2
1HK	7ME3950-5GQ00	D2HT1	**2HK**	7ME3950-5GQ20	D2HT2	**6KL**	7ME3950-5LF00	E2
1HL	7ME3950-5GR00	D4HT1	**2HL**	7ME3950-5GR20	D4HT2	**6KM**	7ME3950-5LF00	E2
1JG	7ME3950-5GM00	C1HT1	**2JG**	7ME3950-5GM20	C1HT2	**6LM**	7ME3950-5LF00	E2
1JH	7ME3950-5GN00	C2HT1	**2JH**	7ME3950-5GN20	C2HT2			
1JJ	7ME3950-5GP00	D1HT1	**2JJ**	7ME3950-5GP20	D1HT2			
1JK	7ME3950-5GQ00	D2HT1	**2JK**	7ME3950-5GQ20	D2HT2			
1JL	7ME3950-5GR00	D4HT1	**2JL**	7ME3950-5GR20	D4HT2			
1KH	7ME3950-5GN00	C2HT1	**2KH**	7ME3950-5GN20	C2HT2			
1KJ	7ME3950-5GP00	D1HT1	**2KJ**	7ME3950-5GP20	D1HT2			
1KK	7ME3950-5GQ00	D2HT1	**2KK**	7ME3950-5GQ20	D2HT2			
1KL	7ME3950-5GR00	D4HT1	**2KL**	7ME3950-5GR20	D4HT2			
1LJ	7ME3950-5GP00	D1HT1	**2LJ**	7ME3950-5GP20	D1HT2			
1LK	7ME3950-5GQ00	D2HT1	**2LK**	7ME3950-5GQ20	D2HT2			
1LL	7ME3950-5GR00	D4HT1	**2LL**	7ME3950-5GR20	D4HT2			

© Siemens 2021

Selection and ordering data (continued)

Other (Univ)			Other (VH)		
Data place 8,9,10 of 7ME372.-... combination	**Sensor part number**	**Sensor Size Code**	**Data place 8,9,10 of 7ME372.-... combination**	**Sensor part number**	**Sensor Size Code**
7BB	7ME3950-5LB01	A2	**8BB**	7ME3950-5LA13	1
7BC	7ME3950-5LB01	A2	**8BC**	7ME3950-5LA13	1
7BD	7ME3950-5LB01	A2	**8BD**	7ME3950-5LA13	1
7BE	7ME3950-5LB01	A2	**8BE**	7ME3950-5LA13	1
7BF	7ME3950-5LB01	A2	**8BF**	7ME3950-5LA13	1
7CB	7ME3950-5LB01	A2	**8CB**	7ME3950-5LA13	1
7CC	7ME3950-5LB01	A2	**8CC**	7ME3950-5LA13	1
7CD	7ME3950-5LB01	A2	**8CD**	7ME3950-5LA13	1
7CE	7ME3950-5LB01	A2	**8CE**	7ME3950-5LA13	1
7CF	7ME3950-5LB01	A2	**8CF**	7ME3950-5LA13	1
7CG	7ME3950-5LB01	A2	**8CG**	7ME3950-5LA13	1
7DB	7ME3950-5LC01	B3	**8DB**	7ME3950-5LA13	1
7DC	7ME3950-5LC01	B3	**8DC**	7ME3950-5LA13	1
7DD	7ME3950-5LC01	B3	**8DD**	7ME3950-5LA13	1
7DE	7ME3950-5LC01	B3	**8DE**	7ME3950-5LA13	1
7DF	7ME3950-5LC01	B3	**8DF**	7ME3950-5LA13	1
7DG	7ME3950-5LC01	B3	**8DG**	7ME3950-5LA13	1
7DH	7ME3950-5LC01	B3	**8DH**	7ME3950-5LA13	1
7EB	7ME3950-5LC01	B3	**8EB**	7ME3950-5LA13	1
7EC	7ME3950-5LC01	B3	**8EC**	7ME3950-5LA13	1
7ED	7ME3950-5LC01	B3	**8ED**	7ME3950-5LA13	1
7EE	7ME3950-5LC01	B3	**8EE**	7ME3950-5LA13	1
7EF	7ME3950-5LC01	B3	**8EF**	7ME3950-5LA13	1
7EG	7ME3950-5LC01	B3	**8EG**	7ME3950-5LA13	1
7EH	7ME3950-5LC01	B3	**8EH**	7ME3950-5LA13	1
7EJ	7ME3950-5LC01	B3	**8EJ**	7ME3950-5LA13	1
7EK	7ME3950-5LC01	B3	**8EK**	7ME3950-5LA13	1
7FC	7ME3950-5LD00	C3	**8FC**	7ME3950-5LA23	2
7FD	7ME3950-5LD00	C3	**8FD**	7ME3950-5LA23	2
7FE	7ME3950-5LD00	C3	**8FE**	7ME3950-5LA23	2
7FF	7ME3950-5LD00	C3	**8FF**	7ME3950-5LA23	2
7FG	7ME3950-5LD00	C3	**8FG**	7ME3950-5LA23	2
7FH	7ME3950-5LD00	C3	**8FH**	7ME3950-5LA23	2
7FJ	7ME3950-5LD00	C3	**8FJ**	7ME3950-5LA23	2
7FK	7ME3950-5LD00	C3	**8FK**	7ME3950-5LA23	2
7GD	7ME3950-5LD00	C3	**8GD**	7ME3950-5LA23	2
7GE	7ME3950-5LD00	C3	**8GE**	7ME3950-5LA23	2
7GF	7ME3950-5LD00	C3	**8GF**	7ME3950-5LA23	2
7GG	7ME3950-5LD00	C3	**8GG**	7ME3950-5LA23	2
7GH	7ME3950-5LD00	C3	**8GH**	7ME3950-5LA23	2
7GJ	7ME3950-5LD00	C3	**8GJ**	7ME3950-5LA23	2
7GK	7ME3950-5LD00	C3	**8GK**	7ME3950-5LA23	2
7GL	7ME3950-5LD00	C3	**8GL**	7ME3950-5LA23	2
7HE	7ME3950-5LE00	D3	**8HE**	7ME3950-5LA43	3
7HF	7ME3950-5LE00	D3	**8HF**	7ME3950-5LA43	3
7HG	7ME3950-5LE00	D3	**8HG**	7ME3950-5LA43	3
7HH	7ME3950-5LE00	D3	**8HH**	7ME3950-5LA43	3
7HJ	7ME3950-5LE00	D3	**8HJ**	7ME3950-5LA43	3
7HK	7ME3950-5LE00	D3	**8HK**	7ME3950-5LA43	3
7HL	7ME3950-5LE00	D3	**8HL**	7ME3950-5LA43	3
7HM	7ME3950-5LE00	D3	**8HM**	7ME3950-5LA43	3
7JG	7ME3950-5LE00	D3	**8JG**	7ME3950-5LA43	3
7JH	7ME3950-5LE00	D3	**8JH**	7ME3950-5LA43	3
7JJ	7ME3950-5LE00	D3	**8JJ**	7ME3950-5LA43	3
7JK	7ME3950-5LE00	D3	**8JK**	7ME3950-5LA43	3
7JL	7ME3950-5LE00	D3	**8JL**	7ME3950-5LA43	3
7JM	7ME3950-5LE00	D3	**8JM**	7ME3950-5LA43	3
7KH	7ME3950-5LF00	E2	**8KH**	7ME3950-5LA73	4
7KJ	7ME3950-5LF00	E2	**8KJ**	7ME3950-5LA73	4
7KK	7ME3950-5LF00	E2	**8KK**	7ME3950-5LA73	4
7KL	7ME3950-5LF00	E2	**8KL**	7ME3950-5LA73	4
7KM	7ME3950-5LF00	E2	**8KM**	7ME3950-5LA73	4
7LJ	7ME3950-5LF00	E2	**8LJ**	7ME3950-5LA73	4
7LK	7ME3950-5LF00	E2	**8LK**	7ME3950-5LA73	4
7LL	7ME3950-5LF00	E2	**8LL**	7ME3950-5LA73	4
7LM	7ME3950-5LF00	E2	**8LM**	7ME3950-5LA73	4

© Siemens 2021

Selection and ordering data

	Article No.
Spare parts (system)	
SITRANS FS230 ↗ IP65/IP66 (Nema 4X)	**7ME3950-** ■ ■ ■ ■ ■
↗ Click on the Article No. for the online configuration in the PIA Life Cycle Portal.	
Approvals	
All, FM/FMc, ATEX, IECEX - Flow sensors	5
All, FM/FMc, ATEX, IECEX - Temperature sensors	1
Spare sensor code	
For liquid flow sensors pipe ranges please refer to catalog sensor selection chart in the FSS200 section	
Flow sensors for use with mounting frames or tracks Suitable for pipes other than steel or stainless steel.	
Temperature -40 ... +121 °C (-40 ... +250 °F)	
• A1 Universal	5 L B 1 1
• A2 Universal	5 L B 0 1
• B1 Universal	5 L C 1 1
• B2 Universal	5 L C 2 1
• B3 Universal	5 L C 0 1
• C1 Universal	5 L D 1 0
• C2 Universal	5 L D 2 0
• C3 Universal	5 L D 0 0
• D1 Universal	5 L E 1 0
• D2 Universal	5 L E 2 0
• D3 Universal	5 L E 0 0
• E1 Universal	5 L F 1 0
• E2 Universal	5 L F 0 0
• E3 Universal	5 L F 2 0
Gas and liquid sensors for use with mounting frames or tracks Suitable for steel or stainless steel pipes	
Temperature T1	
• A1H high precision	5 L G 0 1
• A2H high precision	5 L H 0 1
• A3H high precision	5 L J 0 1
• B1H high precision	5 G K 0 1
• B2H high precision	5 G L 0 1
• B3H high precision	5 G t 0 1
• C1H high precision	5 G M 0 0
• C2H high precision	5 G N 0 0
• D1H high precision	5 G P 0 0
• D2H high precision	5 G Q 0 0
• D3H high precision	5 G U 0 0
• D4H high precision	5 G R 0 0

	Article No.
Spare parts (system)	
SITRANS FS230 IP65/IP66 (Nema 4X)	**7ME3950-** ■ ■ ■ ■ ■
Temperature T2	
• A1H high precision	5 L G 2 1
• A2H high precision	5 L H 2 1
• A3H high precision	5 L J 2 1
• B1H high precision	5 G K 2 1
• B2H high precision	5 G L 2 1
• B3H high precision	5 G t 2 1
• C1H high precision	5 G M 2 0
• C2H high precision	5 G N 2 0
• D1H high precision	5 G P 2 0
• D2H high precision	5 G Q 2 0
• D3H high precision	5 G U 2 0
• D4H high precision	5 G R 2 0
High temperature universal liquid sensors	
Very high temperature up to 230 °C (446 °F)	
• Size 1 (Ø 12.7 ... 100 mm (0.47 ... 3.94"))	5 L A 1 3
• Size 2 (Ø 30 ... 200 mm (1.18 ... 7.87"))	5 L A 2 3
• Size 2A (Ø 30 ... 200 mm (1.18 ... 7.87"))	5 L A 3 3
• Size 3 (Ø 150 ... 610 mm (5.9 ... 24.0"))	5 L A 4 3
• Size 3A (Ø 150 ... 610 mm (5.9 ... 24.0"))	5 L A 6 3
• Size 4 (Ø 400 ... 1200 mm (16.75 ... 47.24"))	5 L A 7 3
• Size 4A (Ø 400 ... 1200 mm (16.75 ... 47.24"))	5 L A 8 3
Standard RTD temperature sensors	
Standard clamp-on RTD	1 T A 0 0
Submersible clamp-on RTD	1 T B 0 0
Insertion style RTD (size 1), 140 mm (5.5")	1 T J 0 0
Insertion style RTD (size 2), 216 mm (8.5")	1 T J 0 1
Insertion style RTD (size 3), 292 mm (11.5")	1 T J 0 2
Insertion style RTD (size 4), 368 mm (14.5")	1 T J 0 3

© Siemens 2021

Selection and ordering data for SITRANS FS230

Selection and ordering data	Article No.
Spare parts (Miscellaneous)	
SITRANS F S Clamp-on ↗	**7ME3960-■■■■■■**
↗ Click on the Article No. for the online configuration in the PIA Life Cycle Portal.	
FS230 dedicated sensor mounting hardware	
Sensor mounting frames for	
• Universal sensor size B (for pipes > 125 mm (5 inch))	**CQO:1012FN-PB**
• Universal sensor size C	**0 M C 0 0**
• Universal sensor size D	**0 M C 0 1**
• Universal sensor size E	**0 M C 0 1**
• High precision sensor size B (For pipes > 125 mm (5 inch))	**CQO:1012FNH-PB**
• High precision sensor size C	**0 M D 0 0**
• High precision sensor size D	**0 M D 0 1**
• Magnetic mounting frames for size C, D, E, universal and high precision sensors	**0 M D 0 2**
Spacer bars (for indexing sensors on pipe)	
Spacer bar for pipes to 200 mm/8 inch (liquid), 600 mm/24 inch (gas)	**0 M S 1 0**
Spacer bar for pipes to 500 mm/20 inch (liquid), DN 1200/48 inch (gas)	**0 M S 2 0**
Spacer bar for pipes to 800 mm/32 inch (liquid)	**0 M S 3 0**
Spacer bar for pipes to 1200 mm/48 inch (liquid). Must be used with 7ME39600SM30	**0 M S 4 0**
Mounting straps (slotted stainless steel)	
For pipes	
DN 50 ... DN 150	**0 S M 0 0**
DN 50 ... DN 300	**0 S M 1 0**
DN 300 ... DN 600	**0 S M 2 0**
DN 600 ... DN 1200	**0 S M 3 0**
DN 1200 ... DN 1500	**0 S M 4 0**
DN 1500 ... DN 2100	**0 S M 5 0**
DN 2100 ... DN 3000	**0 S M 6 0**
High precision mounting enclosures for sensors	
Stainless steel mounts for high precision size "C" sensors, single enclosure	**0 W S 5 0**
Stainless steel mounts for high precision size "D/E" sensors, single enclosure	**0 W S 6 0**
Stainless steel mounts for high precision size "C" sensors, dual enclosure	**0 W D 5 0**
Stainless steel mounts for high precision size "D/E" sensors, dual enclosure	**0 W D 6 0**
Stainless steel bands for high precision mounting enclosures	
Mounting strap for pipe diameter to	
• 300 mm (13")	**0 S M 0 1**
• 600 mm (24")	**0 S M 1 1**
• 1200 mm (48")	**0 S M 2 1**
• 1500 mm (60")	**0 S M 3 1**
• 2130 mm (84")	**0 S M 4 1**
• 3050 mm (120")	**0 S M 5 1**
• 5486 mm (216")	**0 S M 6 1**
ADAPTER, MTG STRAP, TEMP COMP	**CQO-1012WSM-A2**

	Article No.
Spare parts (Miscellaneous)	
SITRANS F S Clamp-on	**7ME3960-■■■■■■**
Sensor mounting tracks (aluminum with mounting straps) for pipes < 125 mm (5 inch)	
Universal sensor size A or B	**0 M A 0 0**
High precision sensor size A or B	**0 M B 0 0**
Stainless mounting tracks for high temperature 991 sensors	
Size 1 high temperature sensor pair	**CQO: 992MTNHMSH-1**
Size 2 high temperature sensor pair	**CQO: 992MTNHMSH-2**
Size 3 high temperature sensor pair	**CQO: 992MTNHMSH-3**
Size 4 high temperature sensor pair	**CQO: 992MTNHMSH-4**
Clamp-on RTD mounting hardware for dedicated systems	
RTD mounting hardware for dedicated system	
• 1152 ... 610 mm (6 ... 24")	**0 M R 0 0**
• 12.7 ... 50.8 mm (0.5 ... 2")	**0 M R 0 1**
• 31.8 ... 203.2 mm (1.25 ... 8")	**0 M R 0 2**
• 508 ... 1219 mm (20 ... 48")	**0 M R 0 4**
Junction box for clamp on RTD's	**CQO:992ECJ**
Insert RTD thermowells	
Thermowell standard duty	
• Uninsulated pipe 140 mm (5.5")	**CQO:1012TW-1**
• Uninsulated pipe 216 mm (8.5")	**CQO:1012TW-2**
• Uninsulated pipe: 292 mm (11.5")	**CQO:1012TW-3**
• With lagging 140 mm (5.5")	**CQO:1012TW-1L**
• With lagging 216 mm (8.5")	**CQO:1012TW-2L**
• With lagging 292 mm (11.5")	**CQO:1012TW-3L**
Sensor cables	
Coax (CE mark)	
• 10 m (32.8 ft) armored sensor cable pair with nickel plated brass glands	**A5E38028474004**
• 20 m (65.6 ft) armored sensor cable pair with nickel plated brass glands	**A5E38028474005**
• 10 m (32.8 ft) standard/submersible Coax sensor cable pair with Nylon glands	**A5E39669934004**
• 20 m (65.6 ft) standard/submersible Coax sensor cable pair with Nylon glands	**A5E39669934005**
• 10 m (32.8 ft) standard/submersible Coax sensor cable pair with nickel plated brass glands	**A5E39669934009**
• 20 m (65.6 ft) standard/submersible Coax sensor cable pair with nickel plated brass glands	**A5E39669934010**
• 10 m (32.8 ft) standard/submersible Coax sensor cable pair with stainless steel glands	**A5E39669934014**
• 20 m (65.6 ft) standard/submersible Coax sensor cable pair with stainless steel glands	**A5E39669934015**
• 20 m (65.6 ft) plenum rated Coax sensor cable pair with Nylon glands	**A5E39669934020**
• 20 m (65.6 ft) plenum rated Coax sensor cable pair with nickel plated brass glands	**A5E39669934025**
• 20 m (65.6 ft) plenum rated Coax sensor cable pair with stainless steel glands	**A5E39669934030**

© Siemens 2021

Selection and ordering data	Article No.
Spare parts (Miscellaneous)	
SITRANS F S Clamp-on	**7ME3960-** ■ ■ ■ ■ ■ ■
Cable glands and adapters	
Cable gland set M20, nylon	**A5E38145321**
Cable gland set M20, nickel/brass	**A5E38145323**
Cable gland set M20, stainless steel	**A5E38145327**
Iris glands, set of 2, nickel plated brass	**A5E38635890**
Iris glands, set of 2, stainless steel	**A5E38635986**
M20xNPT adapters, set of 8, brass/nickel	**A5E38145635**
M20xNPT adapters, set of 8, brass/nickel, Ex	**A5E38309159**
M20xNPT adapters, set of 8, stainless steel	**A5E38145643**
RTD temperature sensor cables	
6 m (20 ft) standard RTD cable	**0 C R 5 0**
15 m (50 ft) standard RTD cable	**0 C R 5 1**
30 m (100 ft) standard RTD cable	**0 C R 5 2**
46 m (150 ft) standard RTD cable	**0 C R 5 3**
61 m (200 ft) standard RTD cable	**0 C R 5 4**
91 m (300 ft) standard RTD cable	**0 C R 5 5**
6 m (20 ft) submersible RTD cable	**0 C R 5 6**
15 m (50 ft) submersible RTD cable	**0 C R 5 7**
30 m (100 ft) submersible RTD cable	**0 C R 5 8**
46 m (150 ft) submersible RTD cable	**0 C R 5 9**
61 m (200 ft) submersible RTD cable	**0 C R 6 0**
91 m (300 ft) submersible RTD cable	**0 C R 6 1**
Dedicated cable termination kits for:	
Standard, plenum sensor cable (Nema 4X and Nema 7 wall)	**0 C T 0 1**
Submersible sensor cable (Nema 4X and Nema 7 wall)	**0 C T 1 1**
Clamp-on RTD cable termination kit for standard RTD	**0 C T 2 1**
Clamp-on RTD cable termination kit for submersible RTD	**0 C T 3 1**
Insert RTD cable termination kit	**0 C T 4 1**
Termination kit for armored cable	**CQO:1012CNFX-TK**
Ultrasonic couplants	
Temporary water based for portable systems: 350 ml (12 oz): -34 ... +38 °C (-30 ... +100 °F)	**0 U C 1 0**
Permanent synthetic polymer based: 90 ml (3 oz) -40 ... +190 °C (-40 ... +375 °F)	**0 U C 2 0**
Permanent high temperature fluoroether: 163 ml (5.5 oz): -40 ... +230 °C (-40 ... +450 °F)	**0 U C 3 2**
Dry coupling pad kit (10 pieces)	**0 U C 4 0**
Permanent vulcanizing silicone rubber couplant: 90 ml (3 oz): -40…+120C (-40…+250 °F)	**CQO:CC112**
Permanent high temperature silicone grease: 12 ml (0.4 oz): -40 ... +230 °C (-40 ... +450 °F)	**CQO:CC117B**
Permanent high temperature silicone grease: 150 ml (5 oz): -40 ... +230 °C (-40 ... +450 °F)	**CQO:CC117A**
Couplant for submersible sensor applications	**CQO:CC120**

Selection and ordering data	Article No.
Spare parts (Miscellaneous)	
SITRANS F S Clamp-on	**7ME3960-** ■ ■ ■ ■ ■ ■
Pipe damping films	
B1, B2, B3, C1 and C2 sensors	**0 D M 1 0**
D1 and D3 sensors	**0 D M 2 0**
D2 sensor	**0 D M 3 0**
D4 sensor	**0 D M 4 0**
Universal sensor test blocks	
Test block for size A and B universal sensors	**0 T B 1 0**
Test block for size C and D universal sensors	**0 T B 2 0**
Thickness gauge	
Stand alone thickness gauge	**7ME39510TG20**
Cable, DSL to wallbox transmitter	
Standard cable (non-Ex) with 2 x M12 connectors, PO insulation and PUR sleeve, gray, -40 ... +80 °C (-40 ... +176 °F)	
• 5 m (16.4 ft)	**A5E03914805**
• 10 m (32.8 ft)	**A5E03914850**
• 25 m (82 ft)	**A5E03914853**
• 50 m (164 ft)	**A5E03914859**
• 75 m (246 ft)	**A5E03914861**
• 150 m (492 ft)	**A5E03914874**
Standard cable (non-Ex) for termination, PO insulation and PUR sleeve, gray, -40 ... +80 °C (-40 ... +176 °F)	
• 5 m (16.4 ft)	**A5E03914833**
• 10 m (32.8 ft)	**A5E03914849**
• 25 m (82 ft)	**A5E03914854**
• 50 m (164 ft)	**A5E03914856**
• 75 m (246 ft)	**A5E03914864**
• 150 m (492 ft)	**A5E03914873**
Standard cable (Ex) with 2 x M12 connectors, PO insulation and PUR sleeve, blue, -40 ... +80 °C (-40 ... +176 °F)	
• 5 m (16.4 ft)	**A5E03914929**
• 10 m (32.8 ft)	**A5E03914962**
• 25 m (82 ft)	**A5E03914995**
• 50 m (164 ft)	**A5E03915004**
• 75 m (246 ft)	**A5E03915074**
• 150 m (492 ft)	**A5E03915088**
Standard cable (Ex) for termination, PO insulation and PUR sleeve, blue, -40 ... +80 °C (-40 ... +176 °F)	
• 5 m (16.4 ft)	**A5E03914945**
• 10 m (32.8 ft)	**A5E03914973**
• 25 m (82 ft)	**A5E03914984**
• 50 m (164 ft)	**A5E03915015**
• 75 m (246 ft)	**A5E03915057**
• 150 m (492 ft)	**A5E03915100**

© Siemens 2021

SITRANS FS220 ultrasonic flowmeter

Overview



The SITRANS FS220 is a clamp-on ultrasonic flow system consisting of an FST020 transmitter and FSS200 clamp-on sensors.

The transmitter classification FST020 describes a basic clamp-on ultrasonic flowmeter for basic application requirements. Based on the same digitalized platform as the FST030 this system provides the same accuracy and similar functions on a lower cost level. This system is ideal for water measurement and any application not requiring temperature or viscosity compensation.

Benefits

- Easy installation at any time; no production stop, no need to cut pipe or stop flow
- Minimal maintenance; external sensors do not require periodic cleaning
- No moving parts to foul or wear. No contact with media
- No pressure drop or energy loss
- Wide turn-down ratio, bidirectional and high stability at zero flow conditions
- Anomaly compensation tool for correction of non-ideal straight pipe runs. Automatic compensation during backflow
- Optional WideBeam technology ensures highest performance and accuracy
- Compatible with all previously installed transit time sensors

Application

The SITRANS FS220 can be used for the following application conditions:

- Pipe sizes from 10 mm to 10 m
- Pipe materials: ideal for all metals, glass, FRP and most PVC variants; NOT for concrete pipes and special compound pipes
- Pipe wall thickness from 1 to 35 mm; specials on request up to 65 mm
- Media temperatures from -40 to 121 °C; universal high temperature sensors for up to 230 °C max.
- Underground/submerged locations, non-ideal environments, strong pipe vibrations

SITRANS FS220 flowmeters are suitable for most clean liquid applications, including the following:

- Water and wastewater industry
  - Potable water
  - Water and aqueous solutions
  - Wastewater, influent & effluent
  - Processed sewage, sludge
- Chemical feed industry
  - Sodium hypochlorite
  - Sodium hydroxide
- HVAC and power industries
  - Coolant flow
  - Fuel flow
  - Utility district heating, cooling
  - Refrigeration liquids
- Process control
  - Chemicals
  - Pharmaceuticals
  - Food products
  - Very low flow sensitiity (< 0.1 m/s)
  - High temperature liquids > 120 °C (248 °F)

© Siemens 2021

Application (continued)

Sensor type selection guide



	Standard sensor supported in MLFB		
Application condition Note all that apply before making selection	**High precision**	**Universal**	Notes
Media			
General survey (clean liquids) on non-steel pipes		**X**	
General survey (clean liquids) on a limited range of steel pipes	**X**		
Moderately aerated liquid or slurry, up to 121 °C (250 °F)	**X**		
Permanent installation on steel pipe (clean liquids)	**X**		
Installation in offshore or corrosive environment	**X**		With optional stainless steel mounting
Liquid temperature greater than 120 °C (248 °F)	**O**	**X**	High temperature metal block sensors (up to 230 °C (446 °F))
Operation on single pipeline flowing multiple products	**X**	**O**	
Pipe material			
Steel	**X**		
Steel pipe with diameter/wall thickness ratio < 10	**O**	**X**	
Non-steel pipe material (copper, ductile iron, cast iron, etc.)	**O**	**X**	High precision sensors can also be used on plastic and aluminum pipes in special cases

O = not suitable X = preferred choice

Definitions

Sensor chart	Description
FSS200	Formerly 1011 clamp-on sensors of the 1010 systems
Standard	Standard system sensor, selectable as part of a configured product
Special	Sensors available for non-standard applications and pipes. Contact tech support for application use
Corrosions resistant	Stainless steel metal parts on all Size C, D and E and all high temperature sensors
Aluminum	Aluminum metal parts on all HP and Universal size A and B (Corrosion resistant on request for size B)
Spare	Not available as part of a configured product, must be ordered separately
CE	Transmitter and sensors certified for sale in the EU
Trackless mount	Sensors fixed only by straps, no other mounting (spacer bar as an option) - not recommended
Tracks	Permanent installation for universal size A/B, high precision size A/B and all sizes of high temperature. Tracks always come as dual-part for either direct or reflect mounting, and always with straps.
Frames	Three sizes, for permanent installation for universal size C/ D/ E, and for high precision size C/D. For universal and high precision size B available for pipes > 125 OD (Spare)
T1	Usable from -40 ... +120 °C (-40 ... +248 °F), but best for Ø temperature below 80 °C (< 176 °F); standard
T2	Usable from -40 ... +120 °C (-40 ... +248 °F), but best for Ø temperature above 80 °C (< 176 °F)
Submersible	Sensors can be used submerged; adding Denso for supplemental protection is recommended

© Siemens 2021

3

Application (continued)

Sensor Availability Guide

Sensor models	Availability									
	Standard	Spare only	Corrosion resistant	Trackless	Tracks	Frames	T1 best use below 80 °C (176 °F)	T2 best use 80 ... 120 °C (176 ... 248 °F)	Submersible	Catalog
Universal Sensor -40 … 120 °C housing CE IP68										
A1 Universal for pipe OD – 5.8 … 50.8 mm (0.23" … 2")		X			X				X	
A2 Universal for pipe OD – 12.7 … 50.8 mm (0.5" … 2")	X				X				X	X
B1 Universal for pipe OD – 12.7 … 76 mm (0.5" … 3")		X			X	X			X	
B2 Universal for pipe OD – 12.7 … 76 mm (0.5" … 3")		X			X	X			X	
B3 Universal for pipe OD – 19 … 127 mm (0.75" … 5")	X				X	X			X	X
C1 Universal for pipe OD – 51 … 254 mm (2" … 10")		X	X	X		X			X	
C2 Universal for pipe OD – 51 … 254 mm (2" … 10")		X	X	X		X			X	
C3 Universal for pipe OD – 51 … 305 mm (2" … 12")	X		X	X		X			X	X
D1 Universal for pipe OD – 102 … 508 mm (4" … 20")		X	X	X		X			X	
D2 Universal for pipe OD – 152 … 610 mm (6" … 24")		X	X	X		X			X	
D3 Universal for pipe OD – 203 … 610 mm (8" … 24")	X		X	X		X			X	X
*E1 Universal for pipe OD – 254 … 3048 mm (10" … 120")		X	X	X		X			X	
*E2 Universal for pipe OD – 254 … 6096 mm (10" … 240")	X		X	X		X			X	X
*E3 Universal for pipe OD – 304 … 10007 mm (12" … 394")		X	X	X		X			X	
High Precision Sensor -40 … 120 °C (-40 ... +248 °F) T1 (T2) CE IP68										
A1H (High Precision) for pipe WT - 0.64 ... 1.0 mm (0.025" ... 0.04")		X			X		X		X	X
A2H (High Precision) for pipe WT - 1.0 ... 1.5 mm (0.04" ... 0.06")	X				X		X		X	X
A3H (High Precision) for pipe WT - 1.5 ... 2.0 mm (0.06" ... 0.08")	X				X		X		X	X
B1H (High Precision) for pipe WT - 2.0 ... 3.0 mm (0.08" ... 0.12")	X				X	X	X	X	X	X
B2H (High Precision) for pipe WT - 3.0 ... 4.1 mm (0.12" ... 0.16")	X				X	X	X	X	X	X
B3H (High Precision) for pipe WT - 2.7 ... 3.3 mm (0.106" ... 0.128")		X			X	X	X	X	X	X
C1H (High Precision) for pipe WT - 4.1 ... 5.8 mm (0.16" ... 0.23")	X		X	X		X	X	X	X	X
C2H (High Precision) for pipe WT - 5.8 ... 8.1 mm (0..23" ... 0.32")	X		X	X		X	X	X	X	X
* D1H (High Precision) for pipe WT - 8.1 ... 11.2 mm (0..32" ... 0.44")	X		X	X		X	X	X	X	X
* D2H (High Precision) for pipe WT - 11.2 ... 15.7 mm (0.44" ... 0.62")	X		X	X		X	X	X	X	X
* D3H (High Precision) for pipe WT - 7.4 ... 9.0 mm (0..293" ... 0.354")		X	X	X		X	X	X	X	X
* D4H (High Precision) for pipe WT - 15.7 ... 31.8 mm (0..62" ... 1.25")	X		X	X		X	X	X	X	X
High Temperature Universal Sensor -40 ... +230 °C (-40 ... +446 °F)										
High Temperature size 1 ... 230 °C (Ø 12.7 ... 100 mm)		X	X		X				X[1)]	
High Temperature size 2 ... 230 °C (Ø 30 ... 200 mm)	X		X		X				X	X
High Temperature size 3 ... 230 °C (Ø 150 ... 610 mm)	X		X		X				X	X
High Temperature size 4 ... 230 °C (Ø 400 ... 1200 mm)	X		X		X				X	X
High Temperature size 2A ... 230 °C (Ø 30 ... 200 mm)		X	X		X				X[1)]	
High Temperature size 3A ... 230 °C (Ø 150 ... 610 mm)		X	X		X				X[1)]	
High Temperature size 4A ... 230 °C (Ø 400 ... 1200 mm)		X	X		X				X[1)]	

© Siemens 2021

Application (continued)

Sensor mounting availability guide

	Sensor (Dedicated)		
	Universal	**High precision**	**High temperature universal**
Mounting			
Trackless (straps only)	X	X	
Tracks universal dedicated	X		
Tracks HP dedicated		X	
Frames universal dedicated	X		
Frames HP dedicated		X	
Tracks high temperature universal			X
High precision mounting single enclosure for one pair sensors		X	
High precision mounting dual enclosure for one pair sensors		X	
SpacerBar	X	X	
Straps	X	X	X
Denso	X	X	

Function

Operating principle

The SITRANS F S system is a transit-time ultrasonic meter that provides exceptional performance using a non-intrusive clamp-on approach. Ultrasonic sensors transmit and receive acoustic signals directly though the existing pipe wall, where the fluid refraction angle is governed by Snell's law of refraction.

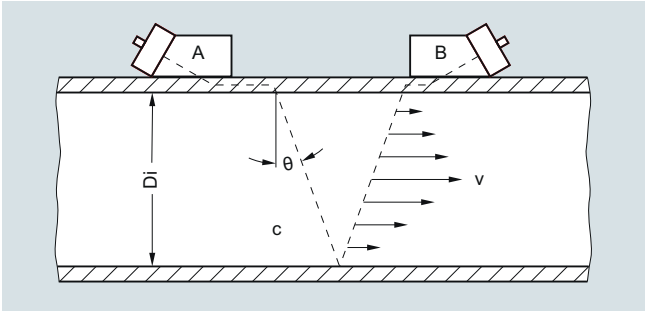

Clamp-on sensor mounted in a reflect configuration

The beam refraction angle is calculated as follows:

$\sin \theta = c / V_\varphi$

c = Velocity of sound in fluid

V_φ = Phase velocity (a constant in the pipe wall)

The flowmeter automatically compensates for any change in fluid sound velocity (or beam angle) in response to variations in the average transit time between sensors A and B. By subtracting the computed fixed times (within the sensor and pipe wall) from the measured average transit time, the meter can then infer the required transit time in the fluid (T_{Fluid}).

The sound waves traveling in the same direction as the flow ($T_{A,B}$) arrive earlier than sound waves traveling against the direction of flow ($T_{B,A}$). This time difference (Δt) is used to compute the line integrated flow velocity (v) as shown in the equation below:

$v = V_\varphi / 2 \cdot \Delta t / T_{Fluid}$

Once the raw flow velocity is determined, the fluid Reynolds Number (Re) must be determined to properly correct for fully developed flow profile. This requires the entry of the fluid's kinematic viscosity (visc) as shown in the equations below, where Q represents the final flow profile compensated volumetric flow rate.

$Re = Di \cdot v / visc \quad Q = K(Re) \cdot (\pi / 4 \cdot Di^2) \cdot v$

v = Flow velocity

visc = μ / ρ = (dynamic viscosity / density)

K(Re) = Reynolds flow profile compensation

In wetted type ultrasonic flowmeters the meter constants are configured prior to leaving the factory. As this is not possible with clamp-on meters, the settings must be made by the customer at the time of installation. These settings include pipe diameter, wall thickness, liquid viscosity, etc.

SITRANS clamp-on flowmeters that include temperature sensing can be configured to dynamically infer changes in fluid viscosity for the purpose of computing the most accurate flow profile compensation (K_{Re}).

Ultrasonic sensor types

Two basic types of clamp-on sensors can be selected for use with the SITRANS F S flowmeter. The lower cost "universal" sensor is the most common type in the industry and is suitable for most single liquid applications where the sound velocity does not vary much. This sensor type can be used on any sonically conductive pipe material (including steel) making it well suited for temporary survey applications. Universal sensors are selected based on the pipe diameter range alone, so wall thickness is less important to the selection process..

The second sensor type is the patented "WideBeam" sensor (called high precision), which utilizes the pipe wall as a kind of waveguide to optimize the signal to noise ratio and provide a wider area of vibration. This makes this kind of sensor less sensitive to any change in the fluid medium.

The WideBeam sensor is designed for steel pipes, but can also be used with aluminum and titanium. It is the preferred sensor for HPI applications. Note that unlike the universal type, this sensor selection is dependent only on the pipe's wall thickness.

© Siemens 2021

SITRANS FS220 ultrasonic flowmeter

Function (continued)

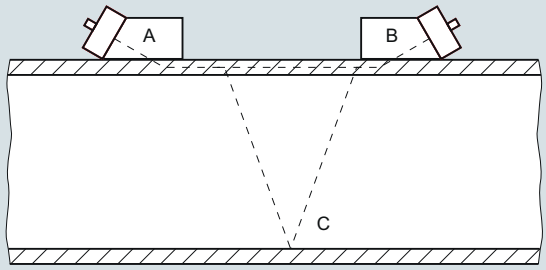

General installation guidelines for SITRANS FSS200 clamp-on sensor

- Minimum measuring range: 0 to ± 0.3 m/s velocity (see meter accuracy graph on next page for more detail)
- Maximum measuring range: 0 to ± 12 m/s (± 30 m/s for high precision sensors). Final flow range determination requires application review

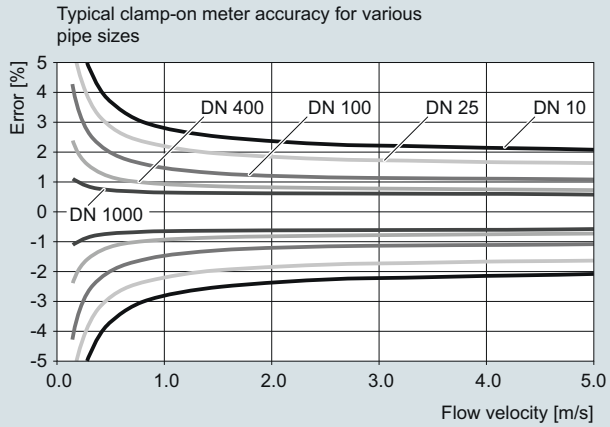

- Pipe must be completely full within the sensor installation volume for accurate flow measurement
- Typical MINIMUM straight pipe requirements are: 10 Diameters upstream/5 Diameters downstream. Additional straight run is required for double out-of-plane elbows and partially open valves.
- Sensors should be installed at least 20° off vertical for horizontal pipes. This reduces the chance of beam interference from gas buildup at the top of the pipe
- Operation inside the Reynolds transition region, between 1000 < Re < 5000 should be avoided for best accuracy
- Submersible and direct burial installations can be accommodated. Consult sales representative for details
- Ultrasonic coupling compound is provided with all sensor orders. Insure that a permanent coupling compound is used for long term installations
- Refer to the "Sensor type selection guide" to insure proper application of the equipment

Technical specifications

Rangeability	
Flow range	±12 m/s (±40 ft/s), depending on pipe size higher or lower
Flow direction	bi-diretional
Flow sensitivity	0.001 m/s (0.003 ft/s) flow rate independent
Digital inputs	
Totalizer Hold	Optically isolated diode Activated On: Input voltage: 2 ... 10 V DC
Totalizer Reset	Optically isolated diode Activated On: Input voltage: 2 ... 10 V DC
Output Channel 1	
Current	4 ... 20 mA (isolated) Externally powered 10 ... 30 V DC
Relay	30 V DC, 3 V AC max. Pulse: 41.6 ms ... 5 s pulse duration Frequency: 0 ... 12.5 kHz (50 % duty cylce)
Pulse rate	Optically isolated transistor 10 mA, 30 V DC max.
Accuracy	For velocities above 0.3 m/s (1 ft/s), ±1.0 % of flow
Repeatability	± 0.25 % (according to ISO 11631)
Zero Drift	0.1 % of rate; < ±0.001 m/s (±0.003 ft/s)
Data refresh rate	100 Hz
Transmitter conditions	
Operating temperature	-10 … +50 °C (14 … 122 °F)
Storage temperature	-20 … +60 °C (-4 … +140 °F)
Degree of protection	IP65, NEMA 4X
Design	
Weight	1.4 kg (3.0 lb)
Dimensions (W x H x D)	176 x 240 x 87 mm (6.9 x 9.5 x 3.4 inch)
Enclosure material	Polycarbonate
Power supply	100 ... 240 V AC @ 20 VA or 11.5 ... 28.5 V DC @ 10 W
Certificates and approvals	
Unclassified locations	
• General Safety	UL, cUL, CE

© Siemens 2021

Selection and ordering data

	Article No.
Spare parts (FSS200 sensors)	
SITRANS F US clamp-on	**7ME3950-5** ■ ■ ■ ■
Temperature range for all sensors is unless otherwise noted -40 °C ... +120 °C (-40 °F ... +248 °F)	
Ideal operating temperatures as follows:	
T1: -40 ... +80 °C (-40 ... +176 °F)	**0**
T2: +80 ... 121 °C (+176 ... 250 °F)	**2**
Spare sensor code	
(Stainless steel construction)	
Liquid flow sensors for use with mounting frames or tracks (including portable)	
FSS200 A2 universal	**L B 0 1**
FSS200 B3 universal	**L C 0 1**
FSS200 C3 universal	**L D 0 0**
FSS200 D3 universal	**L E 0 0**
FSS200 E2 universal	**L F 0 0**
FSS200 A1H (high precision)	**L G 0 1**
FSS200 A2H (high precision)	**L H 0 1**
FSS200 A3H (high precision)	**L J 0 1**
FSS200 B1H (high precision)	**G K 1**
FSS200 B2H (high precision)	**G L 1**
FSS200 B3H (high precision)	**G T 1**
FSS200 C1H (high precision)	**G M 0**
FSS200 C2H (high precision)	**G N 0**
FSS200 D1H (high precision)	**G P 0**
FSS200 D2H (high precision)	**G Q 0**
FSS200 D3H (high precision)	**G U 0**
FSS200 D4H (high precision)	**G R 0**
High temperature universal liquid sensors up to 230 °C (446 °F)	
FSS200 High temp. sensor size 1 for 12.7 to 100 mm diam.	**L A 1 3**
FSS200 High temp. sensor size 2 for 30 to 200 mm diam.	**L A 2 3**
FSS200 High temp. sensor size 3 for 150 to 600 mm diam.	**L A 4 3**
FSS200 High temp. sensor size 4 for 400 to 1200 mm diam.	**L A 7 3**

	Article No.
Spare parts (Miscellaneous)	
SITRANS F US clamp-on	**7ME3960-** ■ ■ ■ ■ ■
Dedicated sensor mounting hardware	
Sensor mounting tracks (dual part aluminium with mounting straps) for pipes < 125 mm (5 inch)	
• Tracks for Universal sensor pair size A or B	**0 M A 0 0**
• Tracks for High precision sensor pair size A or B	**0 M B 0 0**
Sensor mounting frames pair with mounting straps	
• Frames for universal sensor size B (for pipes >125 mm (5 inch)	**CQO:1012FN-PB**
• Frames for universal sensor size C	**0 M C 0 0**
• Frames for universal sensor size D	**0 M C 0 1**
• Frames for universal sensor size E	**0 M C 0 2**
• Frames for High precision sensor size B (for pipes >125 mm (5 inch))	**CQO:1012FNH-PB**
• Frames for High precision sensor size C	**0 M D 0 0**
• Frames for High precision sensor size D	**0 M D 0 1**
Mounting straps for mounting frames (slotted stainless steel)	
• Straps for pipes from DN 50 to DN 150	**0 S M 0 0**
• Straps fFor pipes from DN 50 to DN 300	**0 S M 1 0**
• Straps fFor pipes from DN 300 to DN 600	**0 S M 2 0**
• Straps for pipes from DN 600 to DN 1200	**0 S M 3 0**
• Straps for pipes from DN 1200 to DN 1500	**0 S M 4 0**
• Straps fFor pipes from DN 1500 to DN 2100	**0 S M 5 0**
• Straps for pipes from DN 2100 to DN 3000	**0 S M 6 0**
Spacer bars (for indexing sensors on pipe)	
• Spacer bar for pipes to 200 mm/8 inch (liquid), 600 mm/24 inch (gas)	**0 M S 1 0**
• Spacer bar for pipes to 500 mm/20 inch (liquid), DN 1200/48 inch (gas)	**0 M S 2 0**
• Spacer bar for pipes to 800 mm/32 inch (liquid)	**0 M S 3 0**
• Spacer bar-extension for pipes to 1200 mm/48 inch (liquid) Only use in conjunction with 7ME3960-0MS30	**0 M S 4 0**
High precision mounting enclosures. Spacer bar is included; straps should be ordered separately	
• Stainless steel mounts for high precision size "C" sensor pair, single enclosure (each)	**0 W S 5 0**
• Stainless steel mounts for high precision size "D/E" sensor pair, single enclosure (each)	**0 W S 6 0**
• Stainless steel mounts for high precision size "C" sensors, dual enclosure (pair)	**0 W D 5 0**
• Stainless steel mounts for high precision size "D/E" sensors, dual enclosure (pair)	**0 W D 6 0**
Stainless steel straps for weld seal enclosure mounting (2 x required for dual enclosures)	
Mounting strap for pipe diameter to 300 mm (13 inch)	**0 S M 0 1**
Mounting strap for pipe diameter to 600 mm (24 inch)	**0 S M 1 1**
Mounting strap for pipe diameter to 1200 mm (48 inch)	**0 S M 2 1**
Mounting strap for pipe diameter to 1500 mm (60 inch)	**0 S M 3 1**
Mounting strap for pipe diameter to 2130 mm (84 inch)	**0 S M 4 1**
Mounting strap for pipe diameter to 3050 mm (120 inch)	**0 S M 5 1**

© Siemens 2021

SITRANS FS220 ultrasonic flowmeter

Selection and ordering data

	Article No.
Spare parts (Miscellaneous)	
SITRANS F US clamp-on	**7ME3960-** ■ ■ ■ ■ ■
Stainless mounting tracks for high temp 991 sensors, with straps, dual part for direct and reflect ount, inc. straps	
Size 1 high temp sensor pair	**CQO:992MTNHMSH-1**
Size 2 high temp sensor pair	**CQO:992MTNHMSH-2**
Size 3 high temp sensor pair	**CQO:992MTNHMSH-3**
Size 4 high temp sensor pair	**CQO:992MTNHMSH-4**
Sensor cables FSS220 (IP65 NEMA 4X) wall mount	
Sensor cable pair, terminated, 5 m	**A5E39669934031**
Sensor cable pair, terminated, 10 m	**A5E39669934032**
Sensor cable pair, terminated, 20 m	**A5E39669934033**
Dedicated cable termination kits	
For externally supplied sensor cables, standard and plenum	**0 C T 0 1**
Cable gland kit (normally supplied with transmitter)	**A5E41693895**
for IP65 NEMA 4X enclosures	
Ultrasonic couplan	
Temporary water based for portable systems: 350 ml (12 oz): -34 ... +38 °C (-30 ... +100 °F)	**0 U C 1 0**
Permanent synthetic polymer based: 90 ml (3 oz) -40 ... +190 °C (-40 ... +375 °F)	**0 U C 2 0**
Permanent high temp fluoroether: -40 ... +230 °C (-40 ... +450 °F)	**0 U C 3 0**
Permanent vulcanizing silicone rubber couplant: 90 ml (3 oz): -40 …+120 °C (-40 …+250 °F)	**CQO:CC112**
Permanent high temp silicone grease: 12 ml (0.4 oz): -40 ... +230 °C (-40 ... +450 °F)	**CQO:CC117**
Permanent high temp silicone grease: 150 ml (5 oz): -40 ... +230 °C (-40 ... +450 °F)	**CQO:CC117A**
Couplant for submersible sensor applications	**CQO:CC120**
Dry coupling pads (qty of 10): -34 to +200 °C (-30 to +392 °F)	**0 U C 4 0**
Universal Sensor Test Blocks	
Test block for size A and B universal sensors	**0 T B 1 0**
Test block for size C and D universal sensors	**0 T B 2 0**

Accessories

Description	Article No.	
FSS200 Universal Sensors Selected for general purpose measurement. Since they are selected based on diameter only, a wide range of pipe sizes and materials can be covered with a minimum number of sensors. These can also be selected for cost savings on applications where standard accuracy is sufficient.	**7ME3950-...**	
FSS200 High Precision Sensors Selected for increased performance on steel pipes. They provide the highest accuracy achievable by the meters and therefore should be selected whenever higher accuracy / repeatability is required primarily based on pipe wall thickness.	**7ME3950...**	
FSS200 High Temperature Sensors Selected whenever pipe temperature will exceed 250 °F (120 °C) up to a maximum of 450 °F (232 °C). They are universal type and can therefore be used on any pipe material and are selected by pipe diameter. Constructed in stainless steel. Connection junction box included.	**7ME3950-...**	
Mounting tracks Typically used on smaller pipes for easier and more stable mounting of dedicated universal style sensor size A or B; also available for dedicated high precision sensor size A or B.	**7ME3960-...**	
Mounting Frames These items are useful in simplifying sensor installation. They are strapped to the pipe first and then the sensors are installed, making the installation less cumbersome and more precise. They also enable easy repeated mounting of the sensors assuring alignment to the original sensor positioning. They may be left in place at each measurement location where periodic flow surveys are conducted to simplify subsequent installations and ensure repeatable results.	**7ME3960-...**	
Magnetic mounting frames Magnetic mounting frames are designed to simplify clamp-on sensor installation on pipelines 8 inches (DN 200) and larger by eliminating the need for straps to secure them. They feature powerful magnets to ensure quick and accurate setup. Compatible with all C, D and E universal and high-precision sensors belonging to the SITRANS FSS200 clamp-on family. Magnetic mounting frames are constructed in aluminum for a high level of durability. Ideal use on temporary installations.	**7ME3960-0MD02**	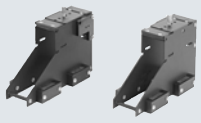

© Siemens 2021

Selection and ordering data (continued)

Description	Article No.	
Test Block Used for checking operation of a meter and sensors prior to a field installation, or as a troubleshooting tool. Selected by sensor size, each block accommodates 2 sensor sizes. Available only for universal sensors.	**7ME3960...**	
Straps Used to fasten sensors or mounting frames to pipe for dedicated meter installations. Stainless steel construction for corrosion resistance.	**7ME3960-...**	
Cable Gland Cable gland kit for use with SITRANS FST020 transmitters housed in IP65 NEMA 4X wall mount enclosures. Kit contains two single port glands for power and one dual port gland for sensor cables.	**A5E41693895**	
Ultrasonic Couplant Fills any voids between sensor emitting surface and pipe wall to allow maximum energy transfer between sensor and pipe. Several different types of couplants are employed as determined by the application conditions and type of installation (Temporary or permanent).	**7ME3960-...**	
Dry Couplant The dry coupling pad is intended for use in any liquid, clamp-on transit time or Doppler applications that require a more durable coupling material. Installation is easy by simply placing one strip of material between sensor and pipe. Not intended for clamp-on gas where damping material is used. The temperature range is -34 to +200 °C (-30 to +392 °F).	**7ME3960-...**	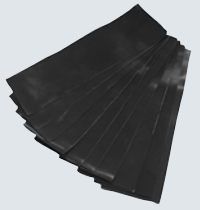
Termination Kit (Flow Sensors) Termination kit for one pair of sensor cables. These can be provided in cases where users will be purchasing bulk cable directly and cutting to length at site, or when existing cable length is to be altered. Selected by cable type.	**7ME3960-...**	

Description	Article No.	
FST020 Transmitter module Main transmitter module for FST020 including SD-card and firmware load	**A5E41693884**	
FST020 Transmitter module cover AC Cover for FST020 Main transmitter module for AC powered units; includes label and screws	**A5E41693888**	
FST020 Transmitter module cover DC Cover for FST020 Main transmitter module for DC powered units; includes label and screws	**A5E41693889**	
FST020 Enclosure cover Enclosure lid for FST020; includes display module, connection label and screws	**A5E38846901**	
FST020 Power Supply AC Power supply module for FST020, AC power	**7ML1830-1MD**	
FST020 Power Supply DC Power supply module for FST020, DC power	**7ML1830-1ME**	
SensorFlash SD-card 4 GB micro SD card -40 °C ... +85 °C for FST020 or FST030 for data storage, firmware and back-up	**A5E38288507**	
Hardware kit Various nuts, screws, and grounding strap for FST020 transmitter	**A5E41944763**	
Sensor cable pair, 5 m Sensor cable for connection between FSS200 sensors and FST020 transmitter, 5 meters in length	**A5E39669934031**	
Sensor cable pair, 10 m Sensor cable for connection between FSS200 sensors and FST020 transmitter, 10 meters in length	**A5E39669934032**	
Sensor cable pair, 20 m Sensor cable for connection between FSS200 sensors and FST020 transmitter, 20 meters in length	**A5E39669934033**	
Enclosure mounting kit Mounting kit to fix enclosure on a 2" stanchion pipe	**QCB:1012NMB1**	

© Siemens 2021

Dimensional drawings

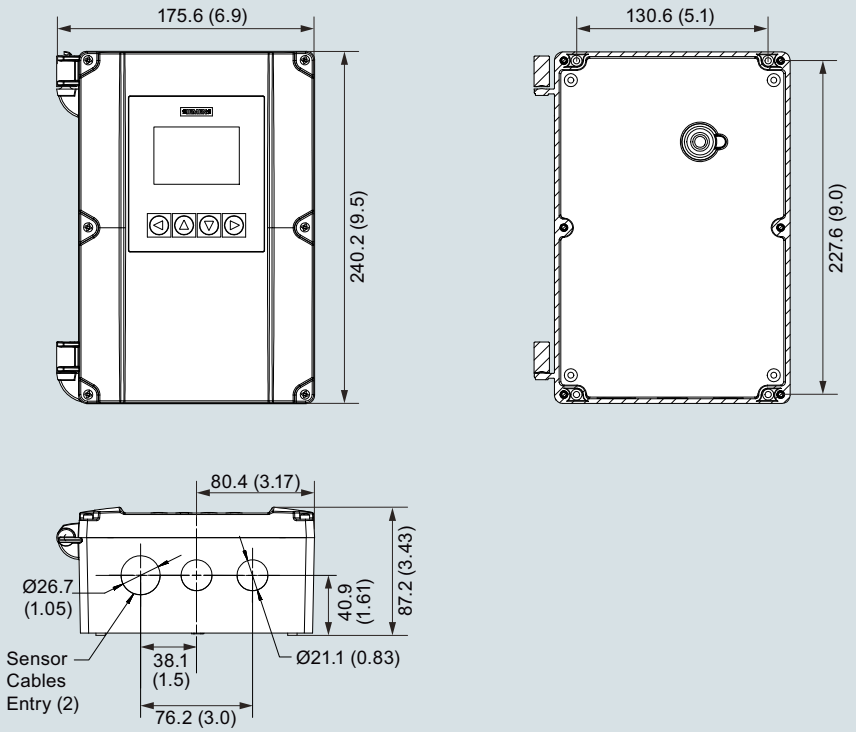

SITRANS FST020 IP65 (NEMA 4X), wall mount enclosure, dimensions in mm (inch)

© Siemens 2021

Overview



The SITRANS FST020 is the basic device for simple and cost-effective clamp-on applications. As a single-path device, it is suitable for flow measurement on liquids that do not require temperature or viscosity consideration and where highest accuracies are not required.

Historically, the FST020 comes from the clamp-on family of analog FUS1010 transmitters. Since the revision in 2017, the updated transmitter is now part of a digital platform based on the latest developments within Digital Signal Processing (DSP) technology - engineered for high measuring performance, fast response to step changes in flow, high immunity against process noise and simplicity in installation, commissioning and maintenance.

The FST020 transmitter delivers standard parameter measurements i.e. volume flow, flow speed or sound velocity by analog outputs and Modbus communication.

Process values

- Volume flow
- Flow velocity
- Sound velocity
- Totalizer 1

Benefits

Flow calculation and measurement

- Dedicated volume flow calculation with DSP technology
- 100 Hz update rate for all primary process values
- Maximum data age from sensor to output is 20 ms
- Independent low flow cut-off settings for volume flow and velocity
- Zero-point adjustment on command from discrete input or host system

Operation and display

- User-configurable operation display
  - Fully graphical display 240 x 160 pixel display with up to 6 programmable views
  - Self-explaining alarm handling/log in clear text
  - Help text for all parameters appears automatically in the configuration menu
- SensorFlash technology stores production specific system documentation and provides removable memory of all flowmeter setups and functions
  - Calibration certificates (with ordered calibration)
  - Non-volatile memory backup of operational data
  - Transfer of user configuration to other flowmeters
  - 4GB SD card for storage and data logging
  - Audit trail of all parameter changes
  - Alarm logging

Alarms and safety

- Advanced diagnosis and service menu enhances trouble-shooting and meter validation
- Configurable upper and lower alarm and warning limits for all process values

Outputs and control

- Monitoring comprised of 1 individually configurable totalizer
- Single parameter outputs that can be assigned individually to any of the following parameters:
  - Volume flow
  - Flow velocity
  - Sound velocity
  - Flow direction

Channel 1 is 4 to 20 mA analog output. The current signal can be configured for passive volume flow.

Relay output(s) can be user configured to Alarm status or warning.

Modbus RTU RS 485 comes as standard.

Signal input

The signal input can be user-configured for:

- Totalizer reset functions
- Forcing outputs or freezing process values
- Initiating automatic zero point adjustment

Approvals and certificates

The SITRANS FST020 transmitter was designed to comply with or exceed the requirements of international standards and regulations.

Design

- Field clamp-on (non-intrusive)
- Single path, for only one pair of sensors on one pipe
- IP65 (NEMA 4X) wall mount housing, constructed of polycarbonate
- Available AC or DC power, 100 to 240 V AC, 11.5 to 28.5 V DC

Function

- 240 x 160 pixel graphical display with 4 key navigation and backlight
- 6 user programmable views for individual process and diagnostic information
- Modbus RTU communication
- 100 Hz update rate for all primary process value
- Independent low flow cut-off settings for volume and flow velocity
- Fully compatible with Siemens PDM version 8.2 service pack 1 or higher
- Bidirectional flow operation
- Menus available in English and German

© Siemens 2021

SITRANS FST020 ultrasonic flow transmitter, wall mount housing

Technical specifications

Input	
Flow range	± 12 m/s (± 40 ft/s), depending on pipe size higher or lower
Flow direction	bi-directional
Flow sensitivity	0.0003 m/s (0.001 ft/s) flow rate independent
Digital inputs	
Totalizer Hold	Optically isolated diode Activated ON: Input voltage: 2 … 10 V DC
Totalizer Reset	Opticall isolated diode Activated ON: Input voltage: 2 … 10 V DC
Output Channel 1	
Current	4 ... 20 mA (isolated) Externally powered 10 … 30 V DC
Relay	30 V DC, 3 VA AC max.
Pulse rate	Optically isolated transistor 10 mA, 30 V DC max Pulse: 41.6 ms ... 5 s pulse duration Frequency: 0 ... 12.5 kHz (50 % duty cycle)
Accuracy	
Accuracy	For velocities above 0.3 m/s (1 ft/s), ±1.0 % of flow
Repeatability	± 0.25 % (according to ISO 11631)
Zero Drift	0.1 % of rate; < ±0.001 m/s (±0.003 ft/s)
Data refresh rate	100 Hz
Rated operation conditions	
Operating temperature	-10 … +50 °C (14 … +122 °F)
Storage temperature	-20 … +60 °C (-4 … +140 °F)
Degree of protection	IP65/NEMA 4X
Design	
Weight	1.4 kg (3.0 lbs)
Dimensions (W x H x D)	176 x 240 x 87 mm (6.9 x 9.5 x 3.4 inch)
Enclosure material	Polycarbonate
Power supply	100 ... 240 V AC @ 20 VA or 11.5 ... 28.5 V DC @ 10 W
Certificates and approvals	
Unclassified locations • General safety	UL, cUL, CE

© Siemens 2021

Selection and ordering data

				Article No.
Transmitter SITRANS FST020 (Basic), IP65 (NEMA 4X) ↗				**7ME3570-** Ord. Code
				4 0 - 0
↗Click on the Article No. for the online configuration in the PIA Life Cycle Portal.				
Number of ultrasonic paths				
Single path				**1**
Flowmeter functions and I/O configurations				
With display, keypad, 1x 4 ... 20 mA, 1x relay, 1x pulse/frequency, 2x digital input, Modbus RTU				**J**
Meter power options				
100 ... 240 V AC				**A**
11.5 ... 28.5 V DC				**B**
Sensor FSS200[1]				
When ordering a flow system, sensors always come automatically with suitable mounting equipment. Smaller sensor sizes A & B come with mounting tracks, while sensor sizes C, D & E are supplied with frames and spacer bars. Straps provided are for the indicated maximum OD listed below.Strap kits are available to accommodate larger pipes (refer to spare part list). Refer to "Sensor Selection Charts" to find the most suitable sensors for specific pipe sizes and wall thicknesses.				
No sensor				**A**
For the following Universal sensors, temperature range is -40 ... +121 °C (-40 ... +250 °F), FSS200 Universal: select according to outer pipe diameter				
FSS200 Universal	A2	12.7 ... 50 mm (0.5 ... 2")	Track mount and straps provided up to 75 mm (3")	**B**
FSS200 Universal	B3	19 ... 127 mm (0.75 ... 5")	Track mount and straps provided up to 125 mm (5")	**C**
FSS200 Universal	C3	51 ... 305 mm (2 ... 12")	Mounting frame, straps and spacer bar provided up to 330 mm (13")	**D**
FSS200 Universal	D3	203 ... 610 mm (8 ... 24")	Mounting frame and straps and spacer bar provded up to 600 mm (24")	**E**
FSS200 Universal	E2	304 ... 9144 mm (12 ... 360")	Mounting frame and straps and spacer bar provided up to 1200 mm (48")	**F**
For the following High Precision sensors T1, temperature range is -40 ... +120 °C (-40 ... +248 °F), FSS200 High Precision: select according to pipe wall thickness				
FSS200 HP	A1H	0.6 ... 1.0 mm (0.025 ... 0.4")	Track mount and straps provided up to 75 mm (3")	**G**
FSS200 HP	A2H	1.0 ... 1.5 mm (0.04 ... 0.06")	Track mount and straps provided up to 75 mm (3")	**H**
FSS200 HP	A3H	1.5 ... 2.0 mm (0.06 ... 0.08")	Track mount and straps provided up to 75 mm (3")	**J**
FSS200 HP	B1H	2.0 ... 3.0 mm (0.08 ... 0.12")	Track mount and straps provided up to 125 mm (5")	**K**
FSS200 HP	B2H	3.0 ... 4.1 mm (0.12 ... 0.16")	Track mount and straps provided up to 125 mm (5")	**L**
FSS200 HP	C1H	4.1 ... 5.8 mm (0.16 ... 0.23")	Mounting frame, straps and spacer bar up to 600 min (24")	**M**
FSS200 HP	C2H	5.8 ... 8.1 mm (0.23 ... 0.32")	Mounting frame, straps and spacer bar up to 600 min (24")	**N**
FSS200 HP	D1H	8.1 ... 11.2 mm (0.32 ... 0.44")	Mounting frame and straps provided up to 1200 mm (48")[1]	**P**
FSS200 HP	D2H	11.2 ... 15.7 mm (0.44 ... 0.62")	Mounting frame and straps provided up to 1200 mm (48")[1]	**Q**
FSS200 HP	D4H	15.7 ... 31.8 mm (0.62 ... 1.25")	Mounting frame and straps provided up to 1200 mm (48")[1]	**R**
For the following High Temperature sensors, temperature range is -40 ... +230 °C (-40 ... +446 °F), FSS200 High Temperature: select according go outer diameter				
FSS200 HT	Size 2	30 ... 200 mm (1 ... 8")	Mounting track and straps provided up to 250 mm (10")	**Z P 1 A**
FSS200 HT	Size 3	150 ... 610 mm (6 ... 24")	Mounting track and straps provided up to 650 mm (26")	**Z P 2 A**
FSS200 HT	Size 4	400 ... 1200 mm (16 ... 48")	Mounting track and straps provided up to 1250 mm (50")	**Z P 3 A**
Sensor cable (pair - terminated)				
No sensor cable				**A**
Sensor cable, HDPE jacket, submersible, length • 5 m (16.4 ft)				**P**
• 10 m (32.8 ft)				**Q**
• 20 m (65.6 ft)				**R**
Approvals				
UL, ULc, CE				**1**

[1] Supplied spacer bar supports pipes up to 1050 mm (42"). For pipes larger than 1050 mm (42") purchase also, spare part 7ME3960-0MS40 (1012BN-4).

[2] Made of stainless steel construction.

© Siemens 2021

SITRANS FST020 ultrasonic flow transmitter, wall mount housing

Selection and ordering data	Order code
Further designs Please add "**-Z**" to Article No. and specify Order code(s).	
Cable termination kit for customer supplied sensor cable pair Sensor cable termination for standard and plenum cable	**T01**
Mass storage Enable mass storage function or SD-card (not available for USA)	**S30**
Tag and name plates Tag plate, transmitter and sensor	**Y19**

Dimensional drawings

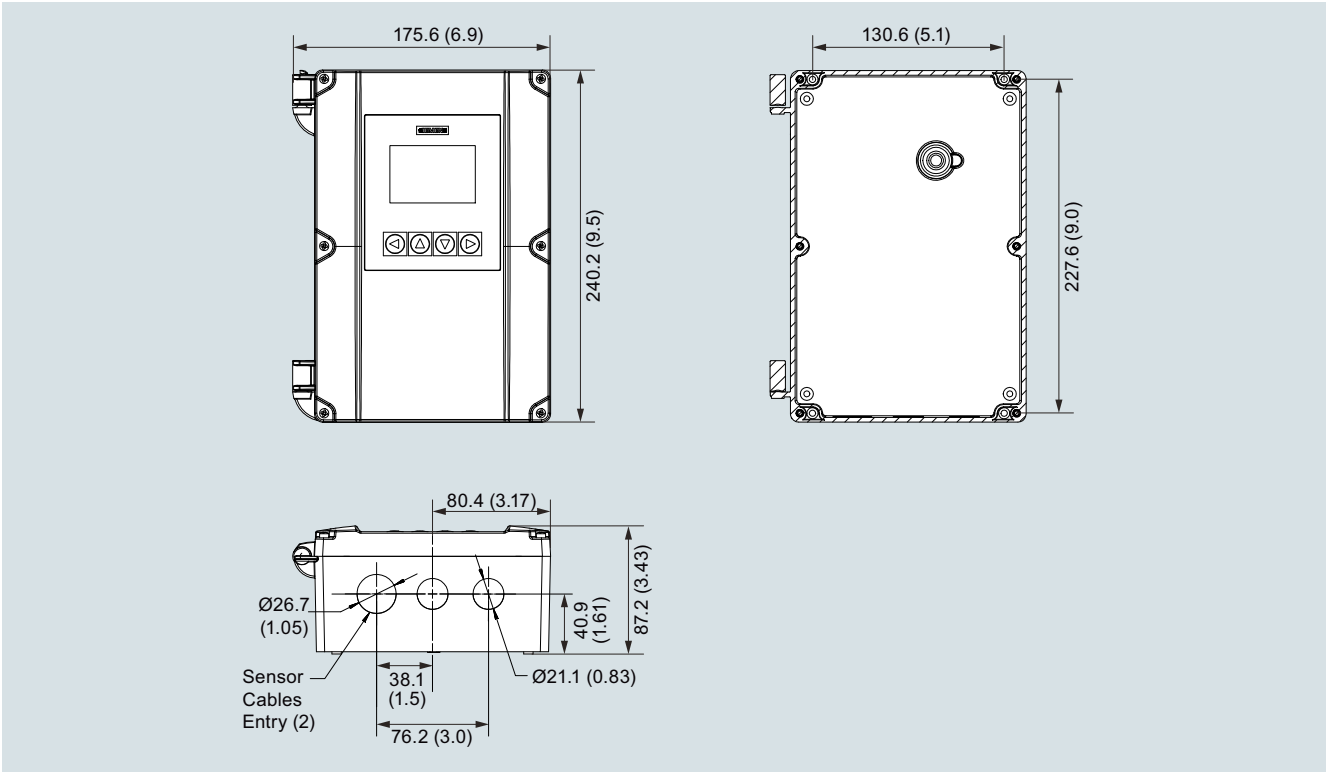

SITRANS FST020 IP65 (NEMA 4X), wall mount enclosure, dimensions in mm (inch)

© Siemens 2021

Overview



The thickness gauge is used to measure the wall thickness of the pipe that a clamp-on ultrasonic flowmeter is installed on. The wall thickness value is a vital factor in the flow computation model and a prerequisite for precise clamp-on ultrasonic flow measurement. When measuring any pipe wall thickness the thickness gauge can also be used as a stand-alone tool used to measure the wall thickness of any metallic or non-metallic pipe materials capable of acting as an ultrasonic wave conductor.

Benefits

The thickness gauge is an indispensable tool in accurate clamp-on ultrasonic flow measurement. For a flowmeter to measure correctly it needs to know the exact wall thickness of the pipe it is measuring on. Since even the smallest miscalculation can have a major effect on the flow reading, the pipe thickness gauge has to be extremely precise. This is why the standard probe operates at a 5 MHz frequency making it capable of measuring pipe thickness ranging from 0.1 to 200 mm (0.03“ to 7.9“) with a very high resolution of up to 0.1 mm (0.004“).

Application

The thickness gauge can be used in any field application where there is a need for flow measurement.

Design

The hand-held micro-processor controlled gauge is designed to measure the thickness of various metallic or non-metallic pipe. Such materials include steel, aluminum, titanium, plastics and ceramics. Measurement results are shown in either inches or millimeter; only a simple pre-calibration to a known thickness or sound velocity is required. The simple-to-read 4-digit LCD display featuring a basic user friendly menu is easily navigable with only three conveniently located push buttons. The lightweight computing unit weighs a mere 150 g (5.3 oz) making it ideal for quick and easy on-site pipe wall thickness measurement and with two AAA alkaline batteries trouble-free operation is ensured for 250 hours.

Function

The thickness gauge measurement is based on the transit time ultrasonic wave propagation principle: a high frequency ultrasonic beam is transmitted into the pipe being measured through a probe acting as a sender and receiver. When the probe subsequently retrieves that same signal, an internal counter calculates the time taken for the signals to be sent and received through the pipe. This value is used to evaluate the speed of sound through the pipe and consequently, the thickness of the pipe wall.

Technical specifications

Thickness gauge	
Display type	4-digit LCD
Display resolution	0.1 mm (0.004“)
Measurement units	Metric and imperial
Sound velocity range	1 000 … 9 999 m/s (3 280 … 32 805 ft/s)
Operating temperature	-10 ... +50 °C (14 ... 122 °F)
Probe/pipe temperature	70 °C (158 °F)
Update range	4 Hz
Frequency	5 MHz
Power source	2 x 1.5 V AAA dry cells
Power consumption	Working current is less than 3 mA
Battery life	Approx. 250 h on a set of batteries
Dimensions (W x H x D)	61 x 108 x 28 mm (2.4 x 4.3 x 1.1“)
Weight	150 g (5.3 oz)

Selection and ordering data

	Article No.
Thickness gauge	**7ME3951-0TG20**

© Siemens 2021

3

Selection and ordering data

Accessories / Spare parts for Clamp-on ultrasonic flowmeters

Description	Article No.	
Universal Portable Sensors Selected generally for portable systems where a wide variety of pipes are to be measured. Since they are selected based on diameter only, a wide range of pipe sizes and materials can be covered with a minimum number of sensors. These can also be selected as a cost savings on applications where standard accuracy is sufficient.	**7ME3951-...**	
High Precision Sensors Selected generally for dedicated meters since the need to cover a range of pipes is not a requirement. They provide the highest accuracy achievable by the meters and therefore should be selected whenever higher accuracy/repeatability is required. They are only applicable to steel pipes but no other metals, and are selected solely by wall thickness.	**7ME3950-...**	
High Temperature Sensors Are selected whenever pipe temperature will exceed 250 °F (120 °C) up to a maximum of 450 °F (232 °C). They are universal type and can therefore be used on any pipe material and are selected by pipe diameter.	**7ME3950-...**	
High Precision Mount These provide the most secure and strongest mounting of the flow sensors. They are generally selected for "High End" meter types where maximum performance criteria applies. They accommodate high precision sensors designed to mount inside these enclosures. May be welded to the pipe if so desired by the customer. They come in 2-piece or 1-piece configurations depending upon the application pipe size and type (Liquid/Gas).	**7ME3960-...**	
Mounting tracks Typically used on smaller pipes for easier and more stable mounting for dedicated universal style sensor size A or B, also available for dedicated high precision sensor size A or B.	**7ME3960-...**	

Description	Article No.	
Magnetic mounting frames Magnetic mounting frames are designed to simplify clamp-on sensor installation on pipelines 8 inches (DN200) and larger by eliminating the need for straps to secure them.They feature powerful magnets to ensure quick and accurate setup.Compatible with all C, D and E universal and high-precision sensors belonging to the SITRANS F US clamp-on family, magnetic mounting frames can be installed on any carbon steel pipe and are constructed in aluminum for a high level of durability.	**7ME3960-0MD02**	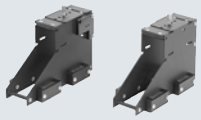
Mounting Frames These items are useful in simplifying sensor installation. They are strapped to the pipe first then the sensors are installed, making the installation less cumbersome and more precise. They also enable easy repeated mounting of the sensors assuring conformation to the original sensor positioning. They may be left in place at each measurement location where periodic flow surveys are conducted to simplify subsequent installations and ensure repeatable results.	**7ME3960-...**	
Spacer Bars Sensors are required to be mounted at a set distance from each other as determined by pipe size and medium being measured. The spacer bar simplifies this requirement by eliminating the need to undertake a precise dimensional measurement. The flowmeter will specify a specific spacing index which is easily accommodated with the marked indices on the bar.	**7ME3960-...**	
Clamp-On RTD's 1000 W platinum RTD's for use where temperature is required. Used with Energy Meters to record supply/return temperature. For this purpose precision matched pairs (to 0.02 °C) are supplied. Single RTD's are also used with FUH and FUG meters to enable live calculations of "Liquident" and Standard Volume Correction.	**7ME3950-...**	
Insert RTD's Are identical to clamp-on RTD's as described above except that they are inserted into the pipe (In a Thermowell). They provide more precise and quicker responding temperature measurement. They are selected when precise temperature measurement of the actual liquid or gas is required as opposed to pipe "skin temperature". Since they project into the pipe they cannot be used in pipeline that undergo periodic "pigging".	**7ME3950-...**	

© Siemens 2021

Selection and ordering data (continued)

Description	Article No.	
Standard Cable (Flow Sensor or RTD) Selected for general purpose installations where no special application requirements exist.	**7ME3960-...**	
Submersible Cable (Flow Sensor) Polyethylene jacketed, for locations that experience periodical or continual submersion of the flow sensors.	**7ME3960-...**	
Plenum Cable (Flow Sensor or RTD) For temperatures above 180 °F. Teflon jacketed to withstand high temperatures, is used when high temp sensors are specified.	**7ME3960-...**	
Armored Cable (Flow Sensor) Double shielded cable, selected when cable will not be installed in conduit between meter and sensors.	**7ME3960-...**	
Temperature sensor cable Cable to connect field installed RTD to flow meter, available in Teflon wrapped, plenum or submersible grade. Typically used for FUE, FUH and FUG series meters where a temperature sensor is employed.	**7ME3960-...**	
Straps Used to fasten sensors or mounting frames to pipe for dedicated meter installations. Stainless steel construction for corrosion resistance.	**7ME3960-...**	
Chains (EZ clamps) Used to fasten portable sensors or mounting frames to pipe. Thumbscrews eliminate need for hand tools when mounting sensors, and allow for easy on/off operations.	**7ME3960-...**	
Ultrasonic Couplant Fills any voids between sensor emitting surface and pipe wall to allow maximum energy transfer between sensor and pipe. Several different types of couplants are employed as determined by the application conditions and type of installation (Temporary or permanent).	**7ME3960-...**	

Description	Article No.	
Dry Couplant The dry coupling pad is intended for use in any liquid, clamp-on transit time or Doppler applications that require a more durable coupling material. Installation is easy by simply placing one strip of material between sensor and pipe. Not intended for clamp-on gas where damping material is used. The temperature range is -34 to +200 °C (-30 to +392 °F).	**7ME3960-...**	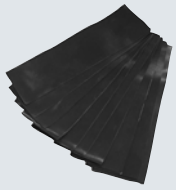
Damping Material Used with gas meters, and required as part of their sensor installation. This material absorbs excess ultrasonic energy from the pipe wall to enable the meter to detect and operate with low amplitude sensor signals normally associated with Clamp-on Gas applications.	**7ME3960-...**	
Test Block Used for checking operation of a meter and sensors prior to a field installation, or as a troubleshooting tool. Selected by sensor size, each block accommodates 2 sensor sizes. Available only for universal sensors.	**7ME3960-...**	
Termination Kit (Flow Sensor or RTD) Provides the connectors, labels and shrink tubing or other associated hardware to complete the termination of a specific cable type. These can be provided in cases where users will be purchasing bulk cable directly and cutting to length at their site, or when existing cable length is to be altered. Selected by cable type.	**7ME3960-...**	
Cable Gland Kit Cable gland kit for use with SITRANS FUS1010, FUH1010 and FUG1010 Ultrasonic Flowmeters housed in IP65 NEMA 4X wall mount enclosures. Kit contains a total of 5 glands to manage and seal the exit and entry of wires and cables to ancillary devices.	**A5E32834162**	

© Siemens 2021

Selection and ordering data (continued)

RTD cable selection chart (Dedicated, each)

RTD cable codes for length and type				
Cable length m (ft)	Standard -40 … +200 °C (-40 … +392 °F)	Submersible -40 … +200 °C (-40 … +392 °F)	for insert RTD -40 ... +200 °C (-40 ... 392 °F)	for submersible insert RTD -40 ... +200 °C (-40 ... 392 °F)
	Order code			
6 (20)	**R01**	**R11**	**R21**	**R31**
15 (50)	**R02**	**R12**	**R22**	**R32**
30 (100)	**R03**	**R13**	**R23**	**R33**
46 (150)	**R04**	**R14**	**R24**	**R34**
61 (200)	**R05**	**R15**	**R25**	**R35**
91 (300)	**R06**	**R16**	**R26**	**R36**

© Siemens 2021

Overview



SITRANS FX vortex flowmeters provide accurate volumetric and mass flow measurement of steam, gases and liquids as an all-in-one solution with integrated temperature and pressure compensation.

Benefits

- 2-wire technology with HART communication
- Integrated temperature compensation for saturated steam as standard feature
- Integrated temperature and pressure compensation enabling direct measurement of mass, standard volume flow rate and energy
- One instrument for measuring pressure, temperature and flow. No additional installation of pressure and temperature sensors
- Maximum process reliability thanks to Intelligent Signal Processing (ISP) - stable readings, free of external disturbances
- Fully welded stainless steel construction with high corrosion, pressure and temperature resistance
- Maintenance-free design
- Ready to use due to plug & play feature
- Minimal pressure drop
- Compact or remote design
- Free Air Delivery (FAD) measurement of a compressor

Application

The SITRANS FX300 is a flowmeter in a single or dual transmitter version, suitable for measuring industrial steam, gases, as well as conductive and non-conductive liquids, e.g. steam (saturated steam, superheated steam), industrial gases (compressed air, nitrogen, liquefied gases, flue gases), and conductive and non-conductive liquids (demineralized water, boiler feed water, solvents, heat transfer oil).

The main applications of SITRANS FX300 can be found in the following sectors:

- Chemical
- Petrochemical
- Oil & Gas
- Power plants
  - Air
  - Heating
  - Cooling
  - Chilling
- Food & beverage
  - Pharmaceutical
  - Sugar refineries
  - Dairies
  - Breweries
  - Production of soft drinks
- Pulp & paper
- Water & waste water

System overview

Version	Flange	Sandwich	Dual transmitter
Compact			
Remote			

© Siemens 2021

Design

SITRANS FX300 vortex flowmeters are available in the following variants:

SITRANS FX300 Single transmitter

The single transmitter variant exists in flange or sandwich design. In flange design the SITRANS FX300 offers a sensor with integrated nominal diameter reduction up to two nominal diameter sizes. That ensures best results in accuracy and optimal measuring ranges even in pipelines with large diameters, designed for low pressure loss. By forgoing complex pipeline reduction installations, space and cost saving installations can be realized. At the same time the number of potential leakages is reduced to a minimum.

The flowmeters in sandwich design will be supplied with additional optimised centring rings. With installation of the centring rings the SITRANS FX300 can be aligned centrically and eliminates any offset between the sensor and the pipeline.

The SITRANS FX300 is also available as a remote version. This feature allows separating the transmitter from the sensor up to a distance of 15m (49 ft). The remote mounted transmitter allows easy operation and optimal readability.

The following configurations can be selected for the single transmitter variant:

- Basic version
  Suitable for liquids and gases, integrated temperature compensation included as standard for saturated steam
- With integrated pressure compensation
  Version with integrated temperature and pressure compensation for gases, wet gases, gas mixtures or steam (energy measurement optional)
- With integrated pressure compensation and isolation valve
  Allowing the pressure sensor to be shut off for the purpose of pressure and leak testing of the pipeline or for being exchanged without interrupting the process.
- Remote version
  With this version transmitter and sensor are locally seperated. In addition, it offers the same features as the compact version (integrated temperature and pressure compensation, isolation valve).

SITRANS FX300 Dual transmitter
This is a genuine redundant system with two independent sensors and transmitters providing twofold functional reliability and availability of the measurement. This variant is optimally suited for measurements in multi-product pipelines.

The dual transmitter version is available as:

- Basic version
  Suitable for liquids and gases, temperature compensation integrated as standard for saturated steam

Function

Operating Principle

SITRANS FX vortex flowmeters measure flow rate by detecting the frequency at which alternating vortices are shed from a bluff body inserted into the flow stream. This principle of measurement is derived from the Karman phenomenon of vortex shedding. The frequency of the alternating vortices is proportional to the flow rate.
The passage of a vortex causes a slight stress on a pick-up sensor placed downstream of the bluff body. The stress is detected by piezo-electric crystals placed inside the pick-up sensor.

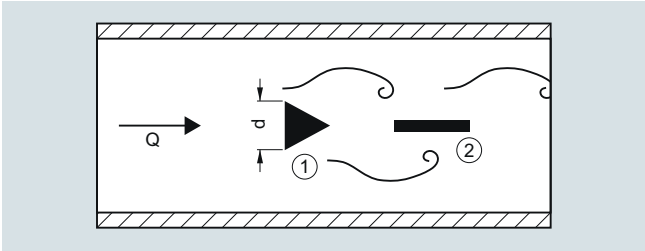

① = Bluff Body, ② = Pick-up

The flowmeter calculates the flow velocity using the following equation:

$Q = A \cdot V = A \cdot d / St \cdot f = 101.93 \cdot f / K$ [m^3/h]

Where:

Q = flow rate [m^3/h]

f = vortex shedding frequency [Hz]

K = calibration constant [pulses/m^3]

d = width of the bluff body [m]

St = Strouhal Number

A = cross-section area [m^2]

V = flow velocity [m/s]

Requirements

In order to generate the vortex streets, the medium must have a minimum velocity:

- For steam and gases, the flow velocity must be 2 to 80 m/s (6.6 to 262 ft/s)
- For liquids the flow velocity must be 0.4 to 10 m/s (1.3 to 32.8 ft/s)

© Siemens 2021

Configuration

Valid combinations of sensor/connections size with flange norm/nominal pressure are shown in the following table

SITRANS FX Flanged - Single transmitter (7ME2600-...)										
Sensor size	**Connection size**	**EN 1092-1, Form B1/B2, PN 10**	**EN 1092-1, Form B1/B2, PN 16**	**EN 1092-1, Form B1/B2, PN 25**	**EN 1092-1, Form B1/B2, PN 40**	**EN 1092-1, Form B1/B2, PN 63**	**EN 1092-1, Form B1/B2, PN 100**	**ANSI B16.5, class 150**	**ANSI B16.5, class 300**	**ANSI B16.5, class 600**
DN15	DN 15	-	-	-	•	-	•	•	•	•
	DN 25	-	-	-	•	-	•	•	•	•
	DN 40	-	-	-	•	-	•	•	•	•
DN 25	DN 25	-	-	-	•	-	•	•	•	•
	DN 40	-	-	-	•	-	•	•	•	•
	DN 50	-	•	-	•	•	•	•	•	•
DN 40	DN 40	-	-	-	•	-	•	•	•	•
	DN 50	-	•	-	•	•	•	•	•	•
	DN 80	-	•	-	•	•	•	•	•	•
DN 50	DN 50	-	•	-	•	•	•	•	•	•
	DN 80	-	•	-	•	•	•	•	•	•
	DN 100	-	•	-	•	•	•	•	•	•
DN 80	DN 80	-	•	-	•	•	•	•	•	•
	DN 100	-	•	-	•	•	•	•	•	•
	DN 150	-	•	-	•	•	•	•	•	•
DN 100	DN 100	-	•	-	•	•	•	•	•	•
	DN 150	-	•	-	•	•	•	•	•	•
	DN 200	•	•	•	•	-	-	•	•	-
DN 150	DN 150	-	•	-	•	•	•	•	•	•
	DN 200	•	•	•	•	-	-	•	•	-
	DN 250	•	•	•	•	-	-	•	•	-
DN 200	DN 200	•	•	•	•	-	-	•	•	-
	DN 250	•	•	•	•	-	-	•	•	-
	DN 300	•	•	•	•	-	-	•	•	-
DN 250	DN 250	•	•	•	•	-	-	•	•	-
	DN 300	•	•	•	•	-	-	•	•	-
DN 300	DN 300	•	•	•	•	-	-	•	•	-

• available
- not available

© Siemens 2021

Technical specifications

Input	
Measuring range limits	See "Dimensional Drawings"
Media pressure	1 ... 100 bar (14.5 … 1450 psi) (Higher pressures on request)
Output	
Current output	
• Measuring range	4 … 20 mA
• Over range	20.8 mA ± 1 % (105 % ± 1 %)
• Load	
- min.	100 Ω
- max.	$R_{max} = (U_{Power\ Supply} - 14\ V)/22\ mA$
• Error signal	NAMUR NE 43
• Maximum output	22 mA (112.5 %)
• Multidrop mode	4 mA
Digital output	
• Communication	HART
• Physical layer	FSK
• Device category	Transmitter
Pulse output	
Passive pulse output, setting pulse value (meter factor) for totalized flow or heat quantity (energy) with option Y47 (e.g.: 1 pulse/kg or 1 pulse/kWh)	
• Pulse frequency	Max. 0.5 Hz
• Power supply	Min. 24 V DC as NAMUR or
• Non-Ex version	open < 1 mA, max. 36 V, closed 100 mA, U < 2 V
• Ex version	open < 1 mA, max. 30 V, closed 100 mA, U < 2 V
Accuracy	
Standard version	
• For liquids	± 0.75 %
- Re ≥ 20 000	
• For steam and gases	± 1 %
- Re ≥ 20 000	
• For steam, gases and liquids	± 2 %
- 10 000 < Re < 20 000	
Pressure and temperature compensated version	
• For liquids	
- 10 000 < Re < 20 000	± 2 %
- Re ≥ 20 000	± 0.75 %
• For gases and steam	
- 10 000 < Re < 20 000	± 2.5 %
- Re ≥ 20 000	± 1.5 %
Repeatability	± 0.1 %
Installation conditions	
(At different conditions, e.g. installation after control valve, bends or reductions, please refer to the operating instructions.)	
• Inlet run	≥ 20 x DN
• Outlet run	≥ 5 x DN

Software	
Uncompensated for liquids and gases, density-compensated by temperature for saturated steam	Order option 1
Density-compensated by temperature and pressure for superheated steam	Order option 4
Gross heat meter	
When the thermal energy of steam is to be measured	Order option 5
Following information is required at option Y51 to Y56	• Y51 Variable current output: Flow rate, power • Y52 Power unit Select one of the following units: kJ/h, MJ/h, GJ/h, Btu/h, kcal/h, kW, MW or special (custom) • Y53 Fullscale value power • Y54 Variable pulse output: Totalized flow, energy • Y55 Totalizer on/off • Y56 Energy unit Select one of the following units: kJ, MJ, GJ, Btu th, kcal, kWh, MWh or special (custom).
Density compensated by temperature and pressure for gases, wet gases	Order option 7
Wet gases	Select Y49 and enter relative humidity of process medium in %
FAD - Free Air Delivery	
When the delivered air of a compressor is to be measured	Order option 8
In Y81 to Y87 add information regarding:	• Y81 Inlet suction temperature • Y82 Atmospheric pressure • Y83 Pressure drop at inlet suction filter • Y84 Inlet relative humidity • Y85 Actual compressor rotation (rpm) • Y86 Rated compressor rotation (rpm)Rated compressor rotation (rpm) • Y87 Relative humidity at compressor output
Mixed gases	When fluid is a gas mixture, specifiy the single gas components and their amount/concentration in %.
Rated operation conditions	
Ambient temperature	
• Non-Ex version	-40 … +85 °C (-40 … +185 °F)
• Ex version	-40 … +65 °C (-40 … +149 °F)
Storage temperature	-50 … +85 °C (-58 … +185 °F)
Media temperature	-40 … +240 °C (-40 … +464 °F)
Density	Taken into consideration when dimensioning
Viscosity	< 10 cP
Reynold's number	10 000 … 2 300 000
Media pressure limit	Max. 100 bar (1450 psi) Higher pressure on request (contact your local Siemens representative)

© Siemens 2021

Technical specifications (continued)

Design	
Material	
• Sensor/Pick-up	AISI 316L (1.4404)/AISI 316L (1.4435)
	Hastelloy C22/2.4602 available on request (contact your local Siemens representative)
• Transmitter housing	Aluminum
• Sensor gaskets (Pick-up/Pressure sensor)	AISI 316L(1.4435) /FPM or FFKM
	FPM (Viton) for steam and non-aggressive gases
	FFKM (Kalrez) for chlorine and other aggressive gases.
	(The meter is fitted with FPM/FFKM gasket only when configured with pressure sensor.)
Process connections	Flange norm DIN EN 1092-1 form B1/B2 or ANSI B16.5 RF.
	Other flanges on request (contact your local Siemens representative)
• Flange version	DN 15 … 300 (½ … 12")
• Sandwich version	DN 15 … 100 (½ … 4")
Degree of protection	IP66/IP67
Dimensions and weights	See “Dimensional Drawings”
Display and operating interface	
Local display	2 lines, 10 characters per line
Languages	German, English, French
Power supply	
• Standard version	14 … 36 V DC
• Ex version	14 … 30 V DC
Certificates and approvals	
Explosion protection	
• ATEX	II 2G EEx d ia [ia] IIC T6
• FM US/C	Class I, II, III, Div 1 & 2
Calibration	All flowmeters will be delivered with a 3 point calibration certificate
Material Certificate	Certificate of compliance, pressure test, material certificate, material in acc. of NACE and PMI of pressure bearing metal parts.
Cleaning	Choose Cleaning Class1 when fluid is oxygen or contains chloride.
Certificates	X-ray and dye penetration test on pressure bearing weldings

© Siemens 2021

3

Selection and ordering data

Article No.

SITRANS FX300 Flanged Single transmitter and T_{max} = 240 °C (464 °F) ↗		7ME2600-					-					Ord. Code		
↗ Click on the Article No. for the online configuration in the PIA Life Cycle Portal.														
Sensor size	**Connection size**													
DN 15 (½")	DN 15 (½")	1	A											
	DN 25 (1")	1	B											
	DN 40 (1½")	1	C											
DN 25 (1")	DN 25 (1")	2	B											
	DN 40 (1½")	2	C											
	DN 50 (2")	2	D											
DN 40 (1½")	DN 40 (1½")	2	K											
	DN 50 (2")	2	L											
	DN 80 (3")	2	M											
DN 50 (2")	DN 50 (2")	2	R											
	DN 80 (3")	2	S											
	DN 100 (4")	2	T											
DN 80 (3")	DN 80 (3")	3	L											
	DN 100 (4")	3	M											
	DN 150 (6")	3	R											
DN 100 (4")	DN 100 (4")	3	S											
	DN 150 (6")	3	T											
	DN 200 (8")	3	Q											
DN 150 (6")	DN 150 (6")	4	M											
	DN 200 (8")	4	P											
	DN 250 (10")	4	Q											
DN 200 (8")	DN 200 (8")	4	T											
	DN 250 (10")	4	U											
	DN 300 (12")	4	V											
DN 250 (10")	DN 250 (10")	4	W											
	DN 300 (12")	4	Y											
DN 300 (12")	DN 300 (12")	5	E											
Flange norm and nominal pressure														
Form B1/B2	**EN 1092-1**													
PN 10	DN 200 ... 300			A										
PN 16	DN 50 ... 300			B										
PN 25	DN 200 ... 300			C										
PN 40	DN 15 ... 300			D										
PN 63	DN 50 ... 150			E										
PN 100	DN 15 ... 150			F										
RF	**ANSI B16.5**													
class 150	1½ ... 12"			J										
class 300	1½ ... 12"			K										
class 600	1½ ... 6"			L										
Sensor material/Gasket														
Stainless steel AISI 316L (1.4404)/AISI 316L (1.4435)/FPM					1									
Stainless steel AISI 316L (1.4404)/AISI 316L (1.4435)/FFKM					5									
Transmitter design														
Compact version - no cable						1								
Remote version														
5 m (16.4 ft)						2								
10 m (32.8 ft)						3								
15 m (49.2 ft)						4								

Article No.

SITRANS FX300 Flanged Single transmitter and T_{max} = 240 °C (464 °F)	7ME2600-					-					Ord. Code		
Approval and cable gland													
Non-Ex, M20 x 1.5						1							
Non-Ex, ½" NPT						2							
FM approval Class 1 Div. 2, M20 x 1.5						3							
ATEX, M20 x 1.5						4							
ATEX, ½" NPT						5							
FM approval Class 1 Div. 1, M20 x 1.5						6							
FM approval Class 1 Div. 1, 1/2" NPT						7							
FM approval Class 1 Div. 2, 1/2" NPT						8							
Further approvals and cable glands													
IEC Ex with M20 x 1.5						9					N	0	A
IEC Ex with ½" NPT						9					N	0	B
Transmitter, display and communication													
With display, HART							A						
Pressure sensor and isolation valve													
Without pressure sensor								A					
With pressure sensor, range:													
• 4 bar (58 psi)								B					
• 6 bar (87 psi)								D					
• 10 bar (145 psi)								E					
• 16 bar (232 psi)								G					
• 25 bar (363 psi)								H					
• 40 bar (580 psi)								K					
• 60 bar (870 psi)								L					
• 100 bar (1450 psi)								N					
With isolation valve and pressure sensor, range:													
• 4 bar (58 psi)								P					
• 6 bar (87 psi)								Q					
• 10 bar (145 psi)								R					
• 16 bar (232 psi)								S					
• 25 bar (363 psi)								U					
• 40 bar (580 psi)								V					
• 60 bar (870 psi)								W					
• 100 bar (1450 psi)								Y					
Software													
Uncompensated for liquids and gases, density compensated by temperature for saturated steam									1				
Density compensation for superheated steam									4				
Density compensated by temperature and pressure for superheated steam, gross heat meter - setting of energy metering at option Y51 ... Y56									5				
Density compensation for gases, wet gases and mixed gases - setting of relative humidity at option Y49									7				
Density compensation for gases, wet gases and mixed gases, Free air delivery (FAD) - setting of FAD at option Y81 ... Y87 and relative humidity at option Y49									8				

© Siemens 2021

Selection and ordering data

	Order code
Additional information	
Please add "**-Z**" to Article No. and specify as minimum Order code Y40, Y41, Y42 and Y45 and plain text.	
Input process data	
Specify medium (liquid, gas, steam or customer-specific)	**Y40**
Temperature: Specify operating temperature with unit	**Y41**
Pressure: Specify operating pressure with unit	**Y42**
Density (only for customer-specified medium): Specify density with unit	**Y43**
Viscosity (only for customer-specified medium): Specify viscosity with unit	**Y44**
Flow rate: Specify max. flow rate with units	**Y45**
Setting of pulse output: Specify pulse value (meter factor) for totalized flow (1 pulse/unit)	**Y47**
Relative humidity of process medium in %	**Y49**
Settings of gross heat	
Variable current output: Flow rate, power	**Y51**
Power unit (specify: kJ/h, MJ/h, GJ/h, Btu/h, kcal/h, kW, MW or special (custom))	**Y52**
Fullscale value power	**Y53**
Variable pulse output: Totalized flow, energy	**Y54**
Totalizer on/off	**Y55**
Energy unit (specify: kJ, MJ, GJ, Btu th, kcal, kWh, MWh or special (custom))	**Y56**
Settings of FAD	
Inlet suction temperature[1)]	**Y81**
Atmospheric pressure[1)]	**Y82**
Pressure drop at inlet suction filter[2)]	**Y83**
Inlet relative humidity[1)]	**Y84**
Actual compressor rotation (rpm)[2)]	**Y85**
Rated compressor rotation (rpm)[2)]	**Y86**
Relative humidity at compressor outlet[2)]	**Y87**

1) Required information from customer.

2) Required information from compressor manufacturer (data sheet).

	Order code
Further designs	
Please add "**-Z**" to Article No. and specify Order code.	
Converter housing material	
Aluminum for increased requirement, color: petrol green	**A10**
Material certificate	
Certificate of compliance EN 10204-2.1	**C10**
Pressure test + 3.1 accordance EN 10204	**C11**
Material certificate of pressure bearing parts + certificate 3.1	**C12**
Material in accordance with NACE MR 0175-01	**C13**
PMI of pressure bearing metal parts + certificate 3.1	**C14**
Material certificate of pressure bearing parts + PMI + certificate 3.1	**C15**
Calibration certificate FX300	
As standard the flow device has a 3-point calibration certificate	
5-point calibration certificate	**D11**
Hardness test	
Hardness test on pressure bearing parts + certificate 3.1	**H30**
Cleaning	
Cleaning class 1	**K46**
Cleaning class 1 + certificate 3.1 acc. EN 10204	**K48**
Certificates	
X-ray test on pressure bearing weldings	**M56**
Dye penetration test on pressure bearing weldings	**M58**
Tag name plate	
Stainless steel tag with 3 mm characters, max. 2 x 8 characters (40 x 20 mm, add plain text)	**Y17**
Stainless steel tag with 2.5 mm characters, max. 8 x 40 characters (120 x 46 mm, add plain text)	**Y18**

© Siemens 2021

3

Selection and ordering data

Article No. **7ME2700-**

SITRANS FX300 Sandwich Single transmitter and T_{max} = 240 °C (464 °F) ↗							-					Ord. Code	
↗ Click on the Article No. for the online configuration in the PIA Life Cycle Portal.													
Sensor size	**Connection size**												
DN 15 (½")	DN 15 (½")	**1**	**A**										
DN 25 (1")	DN 25 (1")	**2**	**B**										
DN 40 (1½")	DN 40 (1½")	**2**	**K**										
DN 50 (2")	DN 50 (2")	**2**	**R**										
DN 80 (3")	DN 80 (3")	**3**	**L**										
DN 100 (4")	DN 100 (4")	**3**	**S**										
Nominal pressure													
Form B1/B2	**EN 1092-1**												
PN 16	DN 50 ... 300			**B**									
PN 40	DN 15 ... 300			**D**									
PN 63	DN 50 ... 150			**E**									
PN 100	DN 15 ... 150			**F**									
RF	**ANSI B16.5**												
class 150	1½ ... 4"			**J**									
class 300	1½ ... 4"			**K**									
class 600	1½ ... 4"			**L**									
Sensor material/Gasket													
Stainless steel AISI 316L (1.4404)/AISI 316L (1.4435)/FPM					**1**								
Stainless steel AISI 316L (1.4404)/AISI 316L (1.4435)/FFKM					**5**								
Transmitter design													
Compact version - no cable						**1**							
Remote version													
5 m (16.4 ft)						**2**							
10 m (32.8 ft)						**3**							
15 m (49.2 ft)						**4**							
Approval and cable gland													
Non-Ex, M20 x 1.5							**1**						
Non-Ex, ½" NPT							**2**						
FM approval Class 1 Div. 2, M20 x 1.5							**3**						
ATEX, M20 x 1.5							**4**						
ATEX, ½" NPT							**5**						
FM approval Class 1 Div. 1, M20 x 1.5							**6**						
FM approval Class 1 Div. 1, 1/2" NPT							**7**						
FM approval Class 1 Div. 2, 1/2" NPT							**8**						
Further approvals and cable glands													
IEC Ex with M20 x 1.5							**9**					**N**	**0** **A**
IEC Ex with ½" NPT							**9**					**N**	**0** **B**
Transmitter, display and communication													
With display, HART								**A**					

Article No. **7ME2700-**

SITRANS FX300 Sandwich Single transmitter and T_{max} = 240 °C (464 °F)	-					Ord. Code	
Pressure sensor and isolation valve							
Without pressure sensor				**A**			
With pressure sensor, range:							
• 4 bar (58 psi)				**B**			
• 6 bar (87 psi)				**D**			
• 10 bar (145 psi)				**E**			
• 16 bar (232 psi)				**G**			
• 25 bar (363 psi)				**H**			
• 40 bar (580 psi)				**K**			
• 60 bar (870 psi)				**L**			
• 100 bar (1450 psi)				**N**			
With isolation valve and pressure sensor, range:							
• 4 bar (58 psi)				**P**			
• 6 bar (87 psi)				**Q**			
• 10 bar (145 psi)				**R**			
• 16 bar (232 psi)				**S**			
• 25 bar (363 psi)				**U**			
• 40 bar (580 psi)				**V**			
• 60 bar (870 psi)				**W**			
• 100 bar (1450 psi)				**Y**			
Software							
Uncompensated for liquids and gases, density compensated by temperature for saturated steam					**1**		
Density compensation for superheated steam					**4**		
Density compensated by temperature and pressure for superheated steam, gross heat meter - setting of energy metering at option Y51 ... Y56					**5**		
Density compensation for gases, wet gases and mixed gases - setting of relative humidity at option Y49					**7**		
Density compensation for gases, wet gases and mixed gases, Free air delivery (FAD) - setting of FAD at option Y81 ... Y87 and relative humidity at option Y49					**8**		

© Siemens 2021

Selection and ordering data

	Order code
Additional information	
Please add "**-Z**" to Article No. and specify as minimum Order code Y40, Y41, Y42 and Y45 and plain text.	
Input process data	
Specify medium (liquid, gas, steam or customer-specific)	**Y40**
Temperature: Specify operating temperature with unit	**Y41**
Pressure: Specify operating pressure with unit	**Y42**
Density (only for customer-specified medium): Specify density with unit	**Y43**
Viscosity (only for customer-specified medium): Specify viscosity with unit	**Y44**
Flow rate: Specify max. flow rate with units	**Y45**
Setting of pulse output: Specify pulse value (meter factor) for totalized flow (1 pulse/unit)	**Y47**
Relative humidity of process medium in %	**Y49**
Settings of gross heat	
Variable current output: Flow rate, power	**Y51**
Power unit (specify: kJ/h, MJ/h, GJ/h, Btu/h, kcal/h, kW, MW or special (custom))	**Y52**
Fullscale value power	**Y53**
Variable pulse output: Totalized flow, energy	**Y54**
Totalizer on/off	**Y55**
Energy unit (specify: kJ, MJ, GJ, Btu th, kcal, kWh, MWh or special (custom))	**Y56**
Settings of FAD	
Inlet suction temperature[1)]	**Y81**
Atmospheric pressure[1)]	**Y82**
Pressure drop at inlet suction filter[2)]	**Y83**
Inlet relative humidity[1)]	**Y84**
Actual compressor rotation (rpm)[2)]	**Y85**
Rated compressor rotation (rpm)[2)]	**Y86**
Relative humidity at compressor outlet[2)]	**Y87**

[1)] Required information from customer.

[2)] Required information from compressor manufacturer (data sheet).

	Order code
Further designs	
Please add "**-Z**" to Article No. and specify Order code.	
Converter housing material	
Aluminum for increased requirement, color: petrol green	**A10**
Material certificate	
Certificate of compliance EN 10204-2.1	**C10**
Pressure test + 3.1 accordance EN 10204	**C11**
Material certificate of pressure bearing parts + certificate 3.1	**C12**
Material in accordance with NACE MR 0175-01	**C13**
PMI of pressure bearing metal parts + certificate 3.1	**C14**
Material certificate of pressure bearing parts + PMI + certificate 3.1	**C15**
Calibration certificate FX300	
As standard the flow device has a 3-point calibration certificate	
5-point calibration certificate	**D11**
Hardness test	
Hardness test on pressure bearing parts + certificate 3.1	**H30**
Cleaning	
Cleaning class 1	**K46**
Cleaning class 1 + certificate 3.1 acc. EN 10204	**K48**
Certificates	
X-ray test on pressure bearing weldings	**M56**
Dye penetration test on pressure bearing weldings	**M58**
Tag name plate	
Stainless steel tag with 3 mm characters, max. 2 x 8 characters (40 x 20 mm, add plain text)	**Y17**
Stainless steel tag with 2.5 mm characters, max. 8 x 40 characters (120 x 46 mm, add plain text)	**Y18**

© Siemens 2021

3

Selection and ordering data

		Article No. 7ME2700-	Ord. Code
SITRANS FX300 Sandwich Dual transmitter and T_{max} = 240 °C (464 °F) ↗			
↗ Click on the Article No. for the online configuration in the PIA Life Cycle Portal.			
Sensor size	**Connection size**		
DN 40 (1½")	DN 40 (1½")	**2 K**	
DN 50 (2")	DN 50 (2")	**2 R**	
DN 80 (3")	DN 80 (3")	**3 L**	
DN 100 (4")	DN 100 (4")	**3 S**	
DN 150 (6")	DN 150 (6")	**4 M**	
DN 200 (8")	DN 200 (8")	**4 T**	
DN 250 (10")	DN 250 (10")	**4 W**	
DN 300 (12")	DN 300 (12")	**5 E**	
Flange norm and nominal pressure			
Form B1/B2	**EN 1092-1**		
PN 10	DN 200 ... 300	**A**	
PN 16	DN 50 ... 300	**B**	
PN 25	DN 200 ... 300	**C**	
PN 40	DN 40 ... 300	**D**	
PN 63	DN 50 ... 150	**E**	
PN 100	DN 40 ... 150	**F**	
RF	**ANSI B16.5**		
class 150	1½ ... 12"	**J**	
class 300	1½ ... 12"	**K**	
class 600	1½ ... 6"	**L**	
Sensor material/Gasket			
Stainless steel AISI 316L (1.4404)/AISI 316L (1.4435)/FPM		**1**	
Stainless steel AISI 316L (1.4404)/AISI 316L (1.4435)/FFKM		**5**	
Transmitter design			
Compact version - no cable		**1**	
Remote version			
5 m (16.4 ft)		**2**	
10 m (32.8 ft)		**3**	
15 m (49.2 ft)		**4**	
Approval and cable gland			
Non-Ex, M20 x 1.5		**1**	
Non-Ex, ½" NPT		**2**	
FM approval Class 1 Div. 2, M20 x 1.5		**3**	
ATEX, M20 x 1.5		**4**	
ATEX, ½" NPT		**5**	
FM approval Class 1 Div. 1, M20 x 1.5		**6**	
FM approval Class 1 Div. 1, 1/2" NPT		**7**	
FM approval Class 1 Div. 2, 1/2" NPT		**8**	
Further approvals and cable glands			
IEC Ex with M20 x 1.5		**9**	**N 0 A**
IEC Ex with ½" NPT		**9**	**N 0 B**
Transmitter, display and communication			
With display, HART		**A**	
Pressure sensor and isolation valve			
Without pressure sensor		**A**	
Software			
Uncompensated for liquids and gases, density-compensated by temperature for saturated steam		**1**	

	Order code
Additional information	
Please add "**-Z**" to Article No. and specify as minimum Order code Y40, Y41, Y42 and Y45 and plain text.	
Input process data	
Specify medium (liquid, gas, steam or customer-specific)	**Y40**
Temperature: Specify operating temperature with unit	**Y41**
Pressure: Specify operating pressure with unit	**Y42**
Density (only for customer-specified medium): Specify density with unit	**Y43**
Viscosity (only for customer-specified medium): Specify viscosity with unit	**Y44**
Flow rate: Specify max. flow rate with units	**Y45**
Setting of pulse output: Specify pulse value (meter factor) for totalized flow (1 pulse/unit)	**Y47**
Relative humidity of process medium in %	**Y49**
Further designs	
Please add "**-Z**" to Article No. and specify Order code.	
Converter housing material	
Aluminum for increased requirement, color: petrol green	**A10**
Material certificate	
Certificate of compliance EN 10204-2.1	**C10**
Pressure test + 3.1 accordance EN 10204	**C11**
Material certificate of pressure bearing parts + certificate 3.1	**C12**
Material in accordance with NACE MR 0175-01	**C13**
PMI of pressure bearing metal parts + certificate 3.1	**C14**
Material certificate of pressure bearing parts + PMI + certificate 3.1	**C15**
Calibration certificate FX300	
As standard the flow device has a 3-point calibration certificate	
5-point calibration certificate	**D11**
Hardness test	
Hardness test on pressure bearing parts + certificate 3.1	**H30**
Cleaning	
Cleaning class 1	**K46**
Cleaning class 1 + certificate 3.1 acc. EN 10204	**K48**
Certificates	
X-ray test on pressure bearing weldings	**M56**
Dye penetration test on pressure bearing weldings	**M58**
Tag name plate	
Stainless steel tag with 3 mm characters, max. 2 x 8 characters (40 x 20 mm, add plain text)	**Y17**
Stainless steel tag with 2.5 mm characters, max. 8 x 40 characters (120 x 46 mm, add plain text)	**Y18**

© Siemens 2021

Selection and ordering data (continued)

Operating instructions for SITRANS FX300

Description	Article No.
• English	**A5E2100423**
• German	**A5E02171807**

All literature is available to download for free, in a range of languages, at
http://www.siemens.com/processinstrumentation/documentation

Spare parts for SITRANS FX300

Description	Article No.	
Electronic		
• Basic D-HART	**A5E02181531**	
• Steam D-HART	**A5E02181541**	
• Gas D-HART	**A5E02181544**	
Serial number of flow meter must be specified on order.		
Display	**A5E02181558**	
Sensor replacement (incl. seal disc, pickup, O-rings for pickup, and pressure screw)		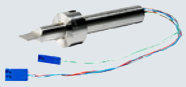
• DN 15 (incl. ½" socket)	**KRH-16111100**	
• DN 25 (incl. 1" socket)	**KRH-16111150**	
• DN 40 ... 100	**KRH-16111200**	
• DN 150 ... 300	**KRH-16111300**	
Pressure sensor replacement (incl. pressure sensor, DUBOX plug, 2 O-rings and calibration certificate)		
• 4 bar (58 psi)	**A5E02181157**	
• 6 bar (87 psi)	**A5E02181175**	
• 10 bar (145 psi)	**A5E02181180**	
• 16 bar (232 psi)	**A5E02181221**	
• 25 bar (363 psi)	**A5E02181307**	
• 40 bar (580 psi)	**A5E02181316**	
• 60 bar (870 psi)	**A5E02181322**	
• 100 bar (1450 psi)	**A5E02181437**	
Service Toolbox for programming software (basic, steam and gas); for changing settings and diagnostics Note: Dedicated service training is required. Please contact Customer Support.	**A5E02375819**	
Connection cable for remote mounting		
• 15 m (49 ft)	**A5E36832003**	

Dimensional drawings

Compact version

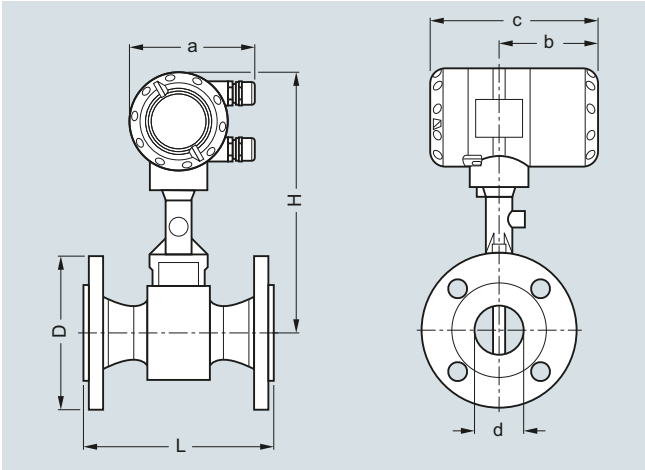

Flange version

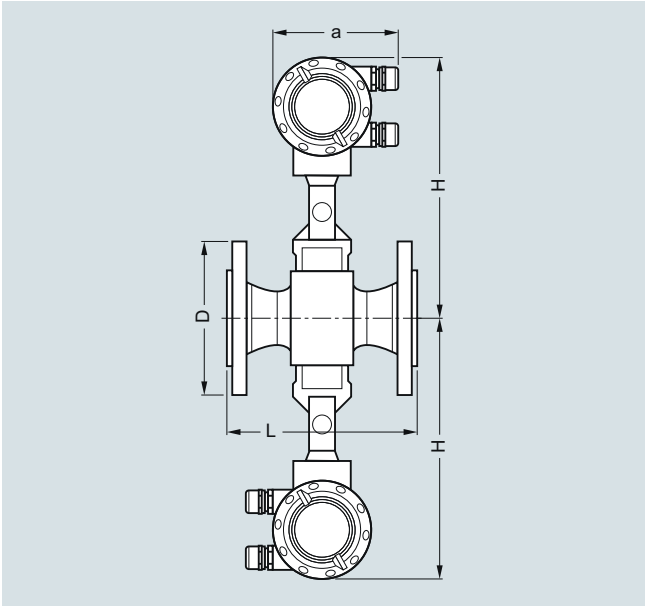

Flange version, dual converter

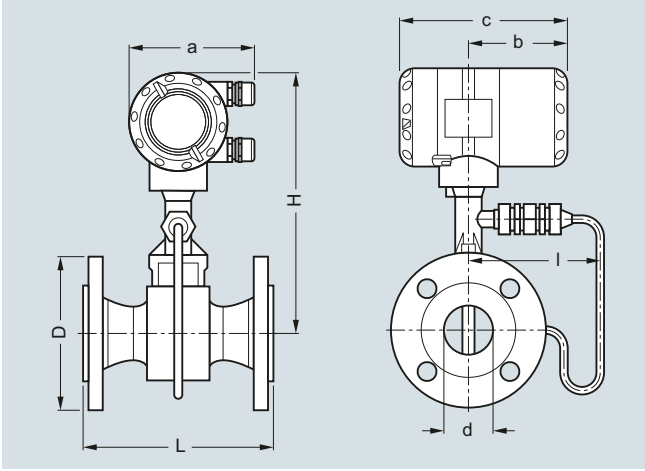

Flange version with pressure sensor

© Siemens 2021

Dimensional drawings (continued)

Flange version DIN EN 1092-1

Size	Pressure rating	Dimensions [mm (inch)] a = 135 (5.32), b = 108 (4.26), c = 184 (7.25)							Weight [kg (lb)][1]	
DN	PN	d	d FR[2]	d FR[3]	D	L	H	I	Flowmeter (without pressure sensor)	Flowmeter (with pressure sensor)
15	40	17.3 (0.68)	-	-	95 (3.74)	200 (7.87)	315 (12.40)	144 (5.67)	5.5 (12.13)	6.1 (13.45)
15	100	17.3 (0.68)	-	-	105 (4.13)	200 (7.87)	315 (12.40)	144 (5.67)	6.5 (14.33)	7.1 (15.65)
25	40	28.5 (1.12)	17.3 (0.68)	-	115 (4.53)	200 (7.87)	315 (12.40)	144 (5.67)	7.3 (16.09)	7.9 (17.42)
25	100	28.5 (1.12)	17.3 (0.68)	-	140 (5.51)	200 (7.87)	315 (12.40)	144 (5.67)	9.3 (20.50)	9.9 (21.83)
40	40	43.1 (1.70)	28.5 (1.12)	17.3 (0.68)	150 (5.91)	200 (7.87)	320 (12.60)	144 (5.67)	10.2 (22.49)	10.8 (23.81)
40	100	42.5 (1.67)	28.5 (1.12)	17.3 (0.68)	170 (6.69)	200 (7.87)	320 (12.60)	144 (5.67)	14.2 (31.31)	14.8 (32.63)
50	16	54.5 (2.15)	42.5 (1.67)	28.5 (1.12)	165 (6.50)	200 (7.87)	325 (12.80)	144 (5.67)	12.1 (26.68)	12.7 (28.00)
50	40	54.5 (2.15)	42.5 (1.67)	28.5 (1.12)	165 (6.50)	200 (7.87)	325 (12.80)	144 (5.67)	12.3 (27.12)	12.9 (28.44)
50	63	54.5 (2.15)	42.5 (1.67)	28.5 (1.12)	180 (7.09)	200 (7.87)	325 (12.80)	144 (5.67)	16.3 (35.94)	16.9 (37.26)
50	100	53.9 (2.12)	42.5 (1.67)	28.5 (1.12)	195 (7.68)	200 (7.87)	325 (12.80)	144 (5.67)	17.8 (39.24)	18.4 (40.57)
80	16	82.5 (3.25)	54.5 (2.15)	42.5 (1.67)	200 (7.87)	200 (7.87)	340 (13.39)	154 (6.06)	16.8 (37.04)	17.4 (38.36)
80	40	82.5 (3.25)	54.5 (2.15)	42.5 (1.67)	200 (7.87)	200 (7.87)	340 (13.39)	154 (6.06)	18.8 (41.45)	19.4 (42.77)
80	63	81.7 (3.22)	54.5 (2.15)	42.5 (1.67)	215 (8.46)	200 (7.87)	340 (13.39)	154 (6.06)	22.8 (50.27)	23.4 (51.59)
80	100	80.9 (3.19)	54.5 (2.15)	42.5 (1.67)	230 (9.06)	200 (7.87)	340 (13.39)	154 (6.06)	26.8 (59.08)	27.4 (60.41)
100	16	107.1 (4.22)	80.9 (3.19)	54.5 (2.15)	220 (8.66)	250 (9.84)	360 (14.17)	164 (6.46)	21.4 (47.18)	22 (48.50)
100	40	107.1 (4.22)	80.9 (3.19)	54.5 (2.15)	235 (9.25)	250 (9.84)	360 (14.17)	164 (6.46)	24.4 (53.79)	25 (55.12)
100	63	106.3 (4.19)	80.9 (3.19)	54.5 (2.15)	250 (9.84)	250 (9.84)	360 (14.17)	164 (6.46)	29.4 (64.82)	30 (66.14)
100	100	104.3 (4.11)	80.9 (3.19)	54.5 (2.15)	265 (10.43)	250 (9.84)	360 (14.17)	164 (6.46)	35.4 (78.04)	36 (79.37)
150	16	159.3 (6.27)	107.1 (4.22)	80.9 (3.19)	285 (11.22)	300 (11.81)	375 (14.76)	174 (6.85)	35.2 (77.60)	35.8 (78.93)
150	40	159.3 (6.27)	107.1 (4.22)	80.9 (3.19)	300 (11.81)	300 (11.81)	375 (14.76)	174 (6.85)	41.2 (90.83)	41.8 (92.15)
150	63	157.1 (6.19)	107.1 (4.22)	80.9 (3.19)	345 (13.58)	300 (11.81)	375 (14.76)	174 (6.85)	59.2 (130.51)	59.8 (131.84)
150	100	154.1 (6.07)	107.1 (4.22)	80.9 (3.19)	355 (13.98)	300 (11.81)	375 (14.76)	174 (6.85)	67.2 (148.15)	67.8 (149.47)
200	10	206.5 (8.13)	159.3 (6.27)	107.1 (4.22)	340 (13.39)	300 (11.81)	400 (15.75)	194 (7.64)	37.8 (83.33)	38.4 (84.66)
200	16	206.5 (8.13)	159.3 (6.27)	107.1 (4.22)	340 (13.39)	300 (11.81)	400 (15.75)	194 (7.64)	37.8 (83.33)	38.4 (84.66)
200	25	206.5 (8.13)	159.3 (6.27)	107.1 (4.22)	360 (14.17)	300 (11.81)	400 (15.75)	194 (7.64)	46.8 (103.18)	47.4 (104.50)
200	40	206.5 (8.13)	159.3 (6.27)	107.1 (4.22)	375 (14.76)	300 (11.81)	400 (15.75)	194 (7.64)	54.8 (120.81)	55.4 (122.14)
250	10	260.4 (10.25)	206.5 (8.13)	159.3 (6.27)	395 (15.55)	380 (14.96)	420 (16.54)	224 (8.82)	57.4 (126.55)	58.0 (127.87)
250	16	260.4 (10.25)	206.5 (8.13)	159.3 (6.27)	405 (15.94)	380 (14.96)	420 (16.54)	224 (8.82)	58.4 (128.75)	59.0 (130.07)
250	25	258.8 (10.19)	206.5 (8.13)	159.3 (6.27)	425 (16.73)	380 (14.96)	420 (16.54)	224 (8.82)	74.4 (164.02)	75.0 (165.35)
250	40	258.8 (10.19)	206.5 (8.13)	159.3 (6.27)	450 (17.72)	380 (14.96)	420 (16.54)	224 (8.82)	92.4 (203.71)	93.0 (205.03)
300	10	309.7 (12.19)	260.4 (10.25)	206.5 (8.13)	445 (17.52)	450 (17.72)	445 (17.52)	244 (9.61)	75.7 (166.89)	76.3 (168.21)
300	16	309.7 (12.19)	260.4 (10.25)	206.5 (8.13)	460 (18.11)	450 (17.72)	445 (17.52)	244 (9.61)	82.2 (181.22)	82.8 (182.54)
300	25	307.9 (12.12)	260.4 (10.25)	206.5 (8.13)	485 (19.09)	450 (17.72)	445 (17.52)	244 (9.61)	98.7 (217.60)	99.3 (218.92)
300	40	307.9 (12.12)	260.4 (10.25)	206.5 (8.13)	515 (20.28)	450 (17.72)	445 (17.52)	244 (9.61)	127.5 (281.09)	128.1 (282.41)

[1] For dual converter: specified weight + 2.80 kg (6.17 lb).

[2] FR - single reduction

[3] F2R - double reduction

© Siemens 2021

Dimensional drawings (continued)

Flange version ANSI B16.5

Size	Pressure rating	Dimensions [mm (inch)] a = 135 (5.32), b = 108 (4.26), c = 184 (7.25)							Weight [kg (lb)][1]	
DN	Class	d	d FR[2]	d FR[3]	D	L	H	I	Flowmeter (without pressure sensor)	Flowmeter (with pressure sensor)
½	150	15.8 (0.62)	-	-	90 (3.54)	200 (7.87)	315 (12.40)	144 (5.67)	4.5 (9.92)	5.1 (11.24)
½	300	15.8 (0.62)	-	-	95 (3.74)	200 (7.87)	315 (12.40)	144 (5.67)	4.9 (10.80)	5.5 (12.13)
½	600	13.9 (0.55)	-	-	95 (3.74)	200 (7.87)	315 (12.40)	144 (5.67)	5.1 (11.24)	5.7 (12.57)
1	150	26.6 (1.05)	15.8 (0.62)	-	110 (4.33)	200 (7.87)	315 (12.40)	144 (5.67)	6.2 (13.67)	6.8 (14.99)
1	300	26.6 (1.05)	15.8 (0.62)	-	125 (4.92)	200 (7.87)	315 (12.40)	144 (5.67)	7.2 (15.87)	7.8 (17.20)
1	600	24.3 (0.96)	15.8 (0.62)	-	125 (4.92)	200 (7.87)	315 (12.40)	144 (5.67)	7.5 (16.53)	8.1 (17.86)
1½	150	40.9 (1.61)	26.6 (1.05)	15.8 (0.62)	125 (4.92)	200 (7.87)	320 (12.60)	144 (5.67)	8.3 (18.30)	8.9 (19.62)
1½	300	40.9 (1.61)	26.6 (1.05)	15.8 (0.62)	155 (6.10)	200 (7.87)	320 (12.60)	144 (5.67)	10.4 (22.93)	11 (24.25)
1½	600	38.1 (1.50)	26.6 (1.05)	15.8 (0.62)	155 (6.10)	200 (7.87)	320 (12.60)	144 (5.67)	11.4 (25.13)	12 (26.46)
2	150	52.6 (2.07)	40.9 (1.61)	26.6 (1.05)	150 (5.91)	200 (7.87)	325 (12.80)	144 (5.67)	11 (24.25)	11.6 (25.57)
2	300	52.6 (2.07)	40.9 (1.61)	26.6 (1.05)	165 (6.50)	200 (7.87)	325 (12.80)	144 (5.67)	12.4 (27.34)	13 (28.66)
2	600	49.3 (1.94)	40.9 (1.61)	26.6 (1.05)	165 (6.50)	200 (7.87)	325 (12.80)	144 (5.67)	13.9 (30.64)	14.5 (31.97)
3	150	78 (3.07)	52.6 (2.07)	40.9 (1.61)	190 (7.48)	200 (7.87)	340 (13.39)	154 (6.06)	19.8 (43.65)	20.4 (44.97)
3	300	78 (3.07)	52.6 (2.07)	40.9 (1.61)	210 (8.27)	200 (7.87)	340 (13.39)	154 (6.06)	22.8 (50.27)	23.4 (51.59)
3	600	73.7 (2.90)	52.6 (2.07)	40.9 (1.61)	210 (8.27)	200 (7.87)	340 (13.39)	154 (6.06)	23.8 (52.47)	24.4 (53.79)
4	150	102.4 (4.03)	78 (3.07)	52.6 (2.07)	230 (9.06)	250 (9.84)	360 (14.17)	164 (6.46)	23.4 (51.59)	24 (52.91)
4	300	102.4 (4.03)	78 (3.07)	52.6 (2.07)	255 (10.04)	250 (9.84)	360 (14.17)	164 (6.46)	31.4 (69.23)	32 (70.55)
4	600	97.2 (3.83)	78 (3.07)	52.6 (2.07)	275 (10.83)	250 (9.84)	360 (14.17)	164 (6.46)	40.4 (89.07)	41 (90.39)
6	150	154.2 (6.07)	102.4 (4.03)	78 (3.07)	280 (11.02)	300 (11.81)	375 (14.76)	174 (6.85)	36.2 (79.81)	36.8 (81.13)
6	300	154.2 (6.07)	102.4 (4.03)	78 (3.07)	320 (12.60)	300 (11.81)	375 (14.76)	174 (6.85)	51.2 (112.88)	51.8 (114.20)
6	600	146.3 (5.76)	102.4 (4.03)	78 (3.07)	355 (13.98)	300 (11.81)	375 (14.76)	174 (6.85)	76.2 (157.99)	76.8 (169.31)
8	150	202.7 (7.98)	154.2 (6.07)	102.4 (4.03)	345 (13.58)	300 (11.81)	400 (15.75)	194 (7.64)	50.0 (110.23)	50.6 (111.55)
8	300	202.7 (7.98)	154.2 (6.07)	102.4 (4.03)	380 (14.96)	300 (11.81)	400 (15.75)	194 (7.64)	74.8 (164.91)	75.4 (166.23)
10	150	254.5 (10.02)	202.7 (7.98)	154.2 (6.07)	405 (15.94)	380 (14.96)	420 (16.54)	224 (8.82)	74.4 (164.02)	75.0 (165.35)
10	300	254.5 (10.02)	202.7 (7.98)	154.2 (6.07)	455 (17.91)	380 (14.96)	420 (16.54)	224 (8.82)	106.4 (234.57)	107.0 (235.89)
12	150	304.8 (12.00)	254.5 (10.02)	202.7 (7.98)	485 (19.09)	450 (17.72)	445 (17.52)	244 (9.61)	106.3 (234.35)	106.9 (235.67)
12	300	304.8 (12.00)	254.5 (10.02)	202.7 (7.98)	520 (20.47)	450 (17.72)	445 (17.52)	244 (9.61)	151.3 (333.56)	151.9 (334.88)

[1] For dual converter: specified weight + 2.80 kg (6.17 lb)

[2] FR - single reduction

[3] F2R - double reduction

© Siemens 2021

3

Dimensional drawings (continued)

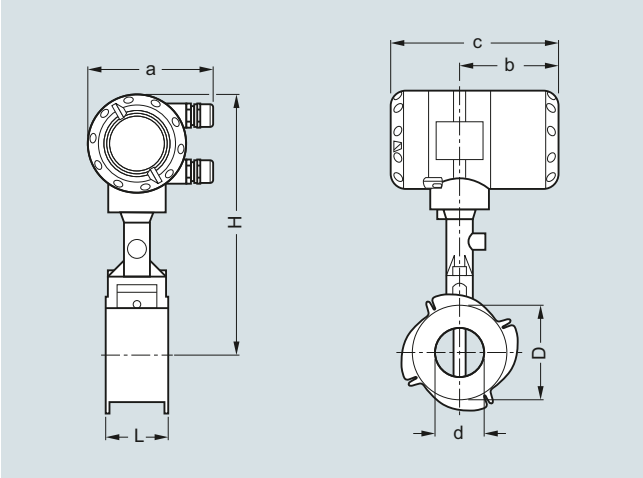

Sandwich version

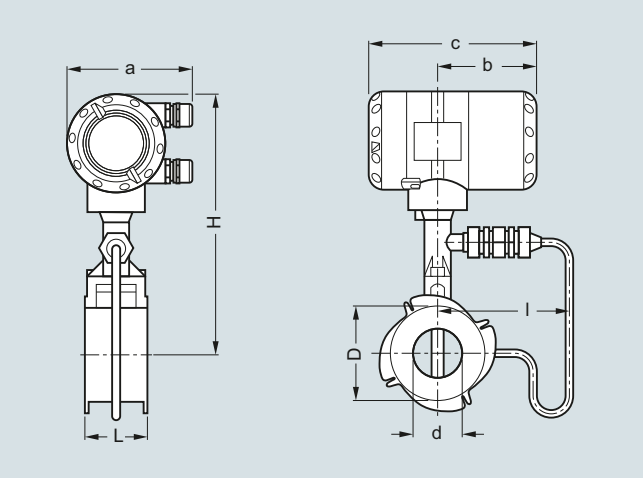

Sandwich version with pressure sensor

Sandwich version EN

Size	Pressure rating	Dimensions [mm (inch)]								Weight [kg (lb)]	
DN	PN	a	b	c	d	D	L	H	l	Flowmeter (without pressure sensor)	Flowmeter (with pressure sensor)
15	16 ... 100	133 (5.24)	105 (4.13)	179 (7.05)	16 (0.63)	45 (1.77)	65 (2.56)	265 (10.43)	144 (5.67)	3.5 (7.72)	4.1 (9.04)
25	16 ... 100	133 (5.24)	105 (4.13)	179 (7.05)	24 (0.94)	65 (2.56)	65 (2.56)	265 (10.43)	144 (5.67)	4.3 (9.48)	4.9 (10.80)
40	16 ... 100	133 (5.24)	105 (4.13)	179 (7.05)	38 (1.50)	82 (3.23)	65 (2.56)	270 (10.63)	144 (5.67)	4.9 (10.80)	5.5 (12.13)
50	16 ... 100	133 (5.24)	105 (4.13)	179 (7.05)	50 (1.97)	102 (4.02)	65 (2.56)	275 (10.83)	144 (5.67)	6 (13.23)	6.6 (14.55)
80	16 ... 100	133 (5.24)	105 (4.13)	179 (7.05)	74 (2.91)	135 (5.31)	65 (2.56)	290 (11.42)	155 (6.10)	8.2 (18.08)	8.8 (19.40)
100	16 ... 100	133 (5.24)	105 (4.13)	179 (7.05)	97 (3.82)	158 (6.22)	65 (2.56)	310 (12.20)	164 (6.46)	9.5 (20.94)	10.1 (22.27)

Sandwich version ANSI

Size	Pressure rating	Dimensions [mm (inch)]								Weight [kg (lb)]	
DN	Class	a	b	c	d	D	L	H	l	Flowmeter (without pressure sensor)	Flowmeter (with pressure sensor)
½"	150, 300, 600	5.24	4.13	7.05	0.63	1.77	2.56	10.43	5.67	7.72	9.04
1"	150, 300, 600	5.24	4.13	7.05	0.94	2.56	2.56	10.43	5.67	9.48	10.80
1½"	150, 300, 600	5.24	4.13	7.05	1.50	3.23	2.56	10.63	5.67	10.80	12.13
2"	150, 300, 600	5.24	4.13	7.05	1.97	4.02	2.56	10.83	5.67	13.23	14.55
3"	150, 300, 600	5.24	4.13	7.05	2.91	5.31	2.56	11.42	6.10	18.08	19.4
4"	150, 300, 600	5.24	4.13	7.05	3.82	6.22	2.56	12.20	6.46	20.94	22.27

© Siemens 2021

Dimensional drawings (continued)

Remote version

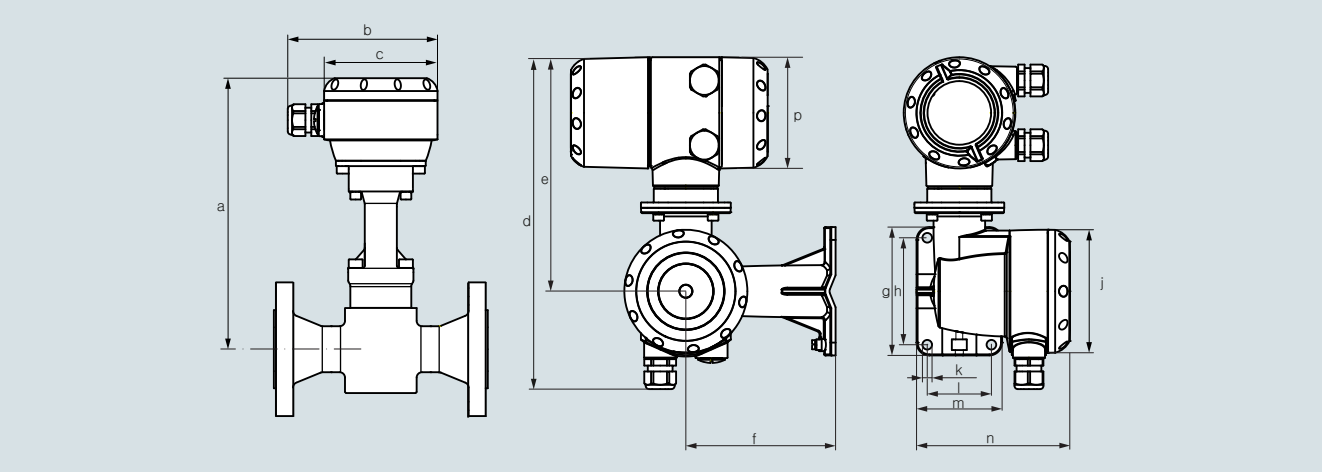

Flanged version

DN	15	25	40	50	80	100	150	200	250	300
	½"	1"	1½"	2"	3"	4"	6"	8"	10"	12"
	a									
[mm]	248	248	253	258	273	293	308	333	353	378
[inch]	9.77	9.77	9.97	10.2	10.8	11.5	12.1	13.1	13.9	14.9

	b	c	d	e	f	g	h	j	k	l	m	n	p
[mm]	140	Ø106	310	219	140	120	100	Ø115	Ø9 (4x)	60	80	144	104
[inch]	5.52	Ø4.18	12.2	8.63	5.52	4.73	3.94	Ø4.53	Ø0.36 (4x)	2.36	3.15	5.67	4.09

Sandwich version

DN	15	25	40	50	80	100
	½"	1"	1½"	2"	3"	4"
	a					
[mm]	248	248	253	258	273	293
[inch]	9.77	9.77	9.97	10.2	10.8	11.5

	b	c	d	e	f	g	h	j	k	l	m	n	p
[mm]	140	Ø106	310	219	140	120	100	Ø115	Ø9 (4x)	60	80	144	104
[inch]	5.52	Ø4.18	12.2	8.63	5.52	4.73	3.94	Ø4.53	Ø0.36 (4x)	2.36	3.15	5.67	4.09

© Siemens 2021

Dimensional drawings (continued)

Flow tables

Measuring Range Limits

Water

Size		Q_{min}	Q_{max}	Q_{min}	Q_{max}
DN to EN 1092-1	**DN to NSI B16.5**	**EN 1092-1 [m^3/h]**	**EN 1092-1 [m^3/h]**	**ANSI B16.5 [m^3/h]**	**ANSI B16.5 [m^3/h]**
15	½"	0.45	5.07	0.44	4.94
25	1"	0.81	11.40	0.81	11.40
40	1½"	2.04	28.58	2.04	28.58
50	2"	3.53	49.48	3.53	49.48
80	3"	7.74	108.37	7.74	108.37
100	4"	13.30	186.22	13.30	186.21
150	6"	30.13	421.86	30.13	421.86
200	8"	56.60	792.42	56.60	792.42
250	10"	90.48	1 266.8	90.48	1 266.8
300	12"	131.41	1 839.8	131.41	1 839.8

Values based on water at 20 °C (68 °F)

Air

Size		Q_{min}	Q_{max}	Q_{min}	Q_{max}
DN to EN 1092-1	**DN to ANSI B16.5**	**EN 1092-1 [m^3/h]**	**EN 1092-1 [m^3/h]**	**ANSI B16.5 [m^3/h]**	**ANS B16.5 [m^3/h]**
15	½"	6.80	25.33	6.72	24.70
25	1"	10.20	81.43	10.20	81.43
40	1½"	25.35	326.63	25.35	326.63
50	2"	43.89	565.49	43.89	565.49
80	3"	96.14	1 238.64	96.14	1 238.6
100	4"	165.19	2 128.27	165.19	2 128.27
150	6"	374.23	4 821.60	374.23	4 821.6
200	8"	702.95	9 056.8	702.95	9 056.8
250	10"	1 123.7	14 478.0	1 123.7	14 478.0
300	12"	1 632.1	21 028.0	1 632.1	21 028.0

Values based on air at 20 °C (68 °F) and 1.013 bar_{abs} (14.7 psi_{abs})

Flow rate limits

Product	Nominal sizes		Minimum flow rates	Maximum flow rates
	to EN	to ANSI	[m/s]	[m/s]
Liquids	DN 15 … 300	DN ½" … 12"	$0.5 \times (998/\rho)^{0.51)}$	$7 \times (998/\rho)^{0.47\ 1)}$
Gas, steam/vapor	DN 15 … 300	DN ½" … 12"	$6 \times (1.29/\rho)^{0.52)}$	$7 \times (998/\rho)^{0.47\ 3)}$

ρ = operating density [kg/m^3]

1) Minimum flow rate 0.3 m/s (0.984 ft/s) - maximum flow rate 7 m/s (23 ft/s)
2) Minimum flow rate 2 m/s (6.6 ft/s)
3) Maximum flow rate 80 m/s (262 ft/s); DN 15: 45 m/s (148 ft/s) and DN 25: 70 m/s (230 ft/s)

© Siemens 2021

Dimensional drawings (continued)

Measuring range saturated steam: 1 to 7 bar

Overpressure [bar]		**1**		**3.5**		**5.2**		**7**	
Density [kg/m³]		**1.13498**		**2.4258**		**3.27653**		**4.16732**	
Temperature [°C]		**120.6**		**148.2**		**160.4**		**170.6**	
Flow [kg/h]		**min.**	**max.**	**min.**	**max.**	**min.**	**max.**	**min.**	**max.**
DN to EN 1092-1	**DN to ASME B16.5**								
15	½"	5.87	28.75	7.68	61.46	8.93	83.01	10.06	105.57
25	1"	11.82	92.42	17.28	197.53	20.09	266.81	22.66	339.35
40	1½"	29.64	370.71	43.33	792.33	50.63	1 070.2	56.80	1 361.2
50	2"	51.31	641.82	75.02	1 371.8	87.19	1 852.8	98.33	2 356.6
80	3"	112.41	1 405.8	164.33	3 004.7	191.00	4 058.4	215.39	5 161.8
100	4"	193.14	2 415.5	282.36	5 162.7	328.16	6 973.3	370.09	8 869.2
150	6"	437.56	5 472.4	639.69	11 696.0	743.45	15 798.0	838.44	20 093.0
200	8"	821.9	10 279.0	1 201.6	21 970.0	1 396.5	29 675.0	1 574.9	37 743.0
250	10"	1 313.9	16 433.0	1 920.9	35 122.0	2 232.5	47 439.0	2 517.7	60 337.0
300	12"	1 908.3	23 866.0	2 789.8	51 010.0	3 242.4	68 899.0	3 656.6	87 630.0

Measuring range saturated steam: 10.5 … 20 bar

Overpressure [bar]		**10.5**		**14.0**		**17.5**		**20.0**	
Density [kg/m³]		**5.88803**		**7.60297**		**9.31702**		**10.5442**	
Temperature [°C]		**186.2**		**198.5**		**208.7**		**215.0**	
Flow [kg/h]		**min.**	**max.**	**min.**	**max.**	**min.**	**max.**	**min.**	**max.**
DN to EN 1092-1	**DN to ANSI B16.5**								
15	½"	12.78	149.17	16.51	192.61	20.23	236.04	22.89	267.12
25	1"	26.93	479.46	30.60	619.11	33.87	758.69	36.04	858.62
40	1½"	67.51	1 878.2	76.72	2 150.7	84.93	2 395.3	90.35	2 557.7
50	2"	116.89	3 251.7	132.82	3 723.4	147.03	4 147.0	156.42	4 428.1
80	3"	256.03	7 122.4	290.93	8 155.8	322.06	9 083.7	342.62	9 699.3
100	4"	439.91	12 238	499.90	14 013.0	553.38	15 608.0	588.69	16 666.0
150	6"	996.62	27 725.0	1 132.5	31 747.0	1 253.7	35 359.0	1 333.7	37 756.0
200	8"	1 872.1	52 079.0	2 127.3	59 634.0	2 354.9	66 419.0	2 505.2	70 921.0
250	10"	2 992.7	83 254.0	3 400.7	95 333.0	3 764.6	106 180.0	4 004.9	113 380.0
300	12"	4 346.5	120 920.0	4 939.1	138 460.0	5 467.5	154 210.0	5 816.5	164 660.0

Measuring range saturated steam: 15 … 100 psig

Overpressure [psig]		**15**		**50**		**75**		**100**	
Density [lbs/ft³]		**0.0719**		**0.1497**		**0.2036**		**0.2569**	
Temperature [°F]		**249.98**		**297.86**		**320.36**		**338.184**	
Flow [lbs/h]		**min.**	**max.**	**min.**	**max.**	**min.**	**max.**	**min.**	**max.**
DN to EN 1092-1	**DN to ANSI B16.5**								
15	½"	12.95	64.35	16.83	133.87	19.62	182.02	22.04	229.63
25	1"	26.25	206.83	37.86	430.30	44.15	585.06	49.59	738.09
40	1½"	65.81	829.61	94.92	1 726	110.68	2 346.7	124.32	2 960.5
50	2"	113.94	1 436.3	164.34	2 988	191.63	4 062.9	215.23	5 125.6
80	3"	249.57	3 146.1	360.00	6 545.3	419.74	8 899.4	471.45	11 227
100	4"	428.81	5 405.7	618.51	11 246	721.21	15 291	810.06	19 291
150	6"	971.47	12 246	1 401.2	25 478	1 633.9	34 642	1 835.2	43 703
200	8"	1 824.8	23 004	2 632.1	47 859	3 069.1	65 072	3 447.2	82 092
250	10"	2 917.2	36 774	4 207.7	76 508	4 906.4	104 030	5 510.8	131 230
300	12"	4 236.8	53 410	6 111.1	111 120	7 125.8	151 080	8 003.6	190 600

© Siemens 2021

Dimensional drawings (continued)

Measuring range saturated steam: 150 … 300 psig

Overpressure [psig]		150		200		250		300	
Density [lbs/ft³]		0.3627		0.4681		0.5735		0.6792	
Temperature [°F]		366.08		388.04		406.22		422.06	
Flow [lbs/h]		min.	max.	min.	max.	min.	max.	min.	max.
DN to EN 1092-1	DN to ANSI B16.5								
15	½"	27.79	324.21	35.86	418.47	43.94	512.66	52.04	607.12
25	1"	58.93	1 042.1	66.94	1 345.1	74.10	1 647.8	80.63	1 951.5
40	1½"	147.72	4 107.2	167.83	4 702.8	185.76	5 237	202.15	5 728
50	2"	255.75	7 111.9	290.56	8 141.9	321.60	9 066.8	350.00	9 917
80	3"	560.19	15 578	636.44	17 834	704.43	19 860	766.60	21 722
100	4"	962.54	26 766	1 093.5	30 643	1 210.4	34 124	1 317.2	37 324
150	6"	2 180.6	60 639	2 477.4	69 421	2 742.1	77 307	2 984	84 556
200	8"	4 096.1	113 900	4 653.6	130 400	5 150.7	145 210	5 605.2	158 830
250	10"	6 548.1	182 090	7 439.3	208 460	8 234.1	232 140	8 960.6	253 910
300	12"	9 510.2	264 460	10 805	302 760	11 959	337 150	13 014	368 770

Circuit diagrams

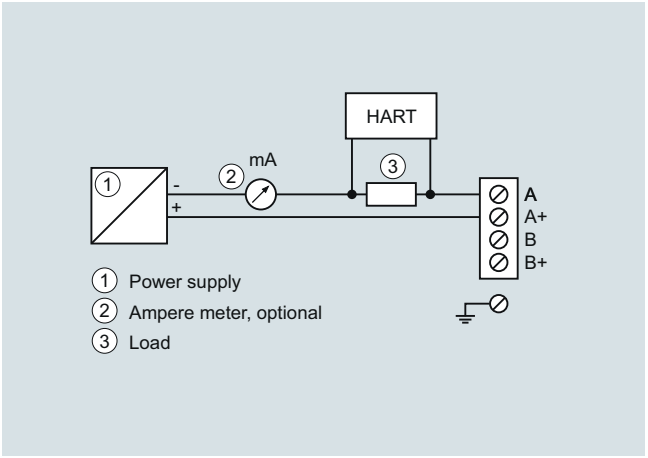

Connection power supply and HART communication

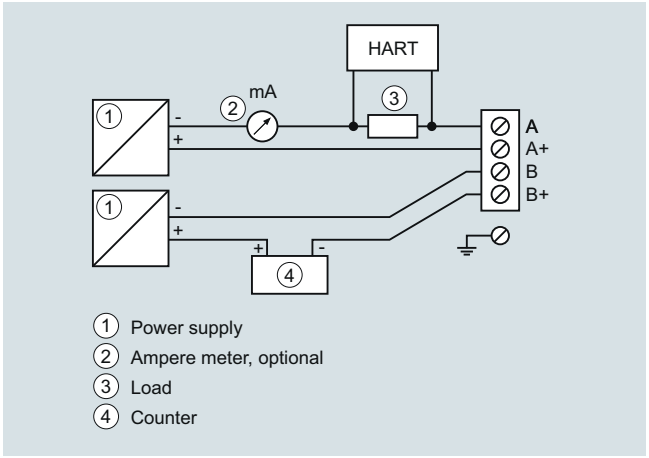

Connection pulse output

© Siemens 2021

Overview



SITRANS FX vortex flowmeter are designed for use in industrial applications and optimally suited to the demands in auxiliary supply systems.

The proven principle of vortex flowmeters is suitable for measurement of liquids, gases and vapors unaffected by conductivity, viscosity, temperature and pressure.

Benefits

- Integrated pressure and temperature compensation
- Temperature compensation for saturated steam included as standard
- High measuring accuracy
- Maintenance-free sensor
- Non-wearing, fully welded stainless steel construction with high resistance to corrosion, pressure and temperature
- SIL2 certified according to IEC 61508 Edition 2
- Use in hazardous areas
- Integrated reduction of nominal diameter for space-saving and economic installation and large measuring ranges
- Redundant data management: Easy exchange of electronics without loss of calibration and configuration data
- FAD (Free Air Delivery) functionality
- Gross and net heat calculation to support advanced energy management
- Remote version with cable length up to 50 m (164 ft) (in preparation)

Even the basic version of the vortex flowmeter SITRANS FX330 is equipped with temperature compensation for saturated steam applications. With the optional pressure sensor the SITRANS FX330 has integrated density compensation for calculation of corrected volume and mass (online density compensation). The density compensation for calculation of corrected volume and mass is based on the standards of NIST for gases and IAPWS for steam.

Higher measuring accuracy with the use of compact measuring systems

With the classic installation of a vortex flowmeter and separate pressure and temperature sensor as well as flow calculator, all errors occurring in the measuring chain must be taken into account when determining system accuracy. This can result in a measuring error between ± 3 to 5 %.

Using a vortex flowmeter with integrated pressure and temperature compensation such as the SITRANS FX330 allows you not only to lower installation costs but also increase the measuring accuracy of the measuring point. In this case the accuracy is ± 1.5 % of the measured value.

classic

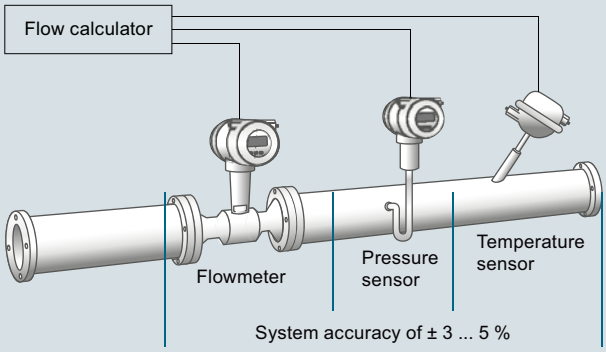

integrated

Flowmeter with integrated pressure and temperature compensation

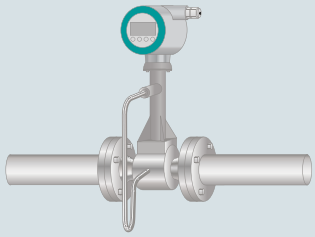

System accuracy of ±1.5 %

The SITRANS FX330 in flange design is available with integrated reduction of nominal diameter for space-saving installations and large measuring spans. About 90% of all vortex flowmeters are ordered one size smaller than the line diameter in order to increase the flow speed and to get a wider measuring range. Here, the line has to be reduced before and widened after the sensor, typically including 20x DN inlet and 5x DN outlet run. With the reduction and widening of nominal diameter included in the sensor, it is no longer necessary. To compensate the non-existent straight inlet run between reduction and the vortex bluff body, these devices are specially calibrated and linearized.

A new feature of the SITRANS FX330 is the advanced signal processing and filtering called AVFD (Advanced Vortex Frequency Detection): Interferences and disturbances in the measuring signal are suppressed, signals outside from the relevant frequency band are filtered out.

Redundant data management prevents loss of calibration and configuration data when changing electronics or display.

By default, all SITRANS FX330 meters are factory-calibrated (traceable to international standards) and pre-set according to customer specifications. The SITRANS FX330 also comes with an installation wizard to ease installation; e.g. in a steam application it will only show related settings.

Developed according to the standard IEC 61508 edition 2, the SITRANS FX330 can be used in safety-related application with classification SIL2 for continuous volume flow measurement.

© Siemens 2021

SITRANS FX330

Application

- Measurement of saturated steam and superheated steam
- Steam boiler monitoring
- Heat metering of steam and hot water
- Measurement of consumption of industrial gases
- Measurement of consumption in compressed air systems
- Monitoring of compressor output
- Evaluation of Free Air Delivery (FAD)
- SIP and CIP processes in the food, beverage and pharmaceutical industries
- Measuring of conductive and non-conductive liquids
- Safety-related measurement in SIL applications (SIL2)

Gross and net heat quantity calculation

The SITRANS FX330 was designed for applications in auxiliary and supply service lines, such as internal monitoring of energy flows for saturated and superheated steam or hot water. Equipped with temperature sensor as standard, the device can be installed as heat meter in the feed line directly connected with an external temperature sensor in the return line. The gross and net heat calculation can be fed into a DCS to support advanced energy management.

When it comes to energy, the most accurate measurement of consumption is essential. By combining flow, temperature and pressure measurements in one device, SITRANS FX330 provides the basis for a precise mass flow calculation.

In steam applications, the software even determines the enthalpy - the heat content - of the steam. Therefore, SITRANS FX330 is able to calculate the gross heat quantity.

In case net heat quantity consumption of process is asked for, a single temperature sensor can be added to the return line. SITRANS FX330 uses the readings to calculate the amount of heat consumed.

The SITRANS FX330 thereby proves itself to be a reliable partner.

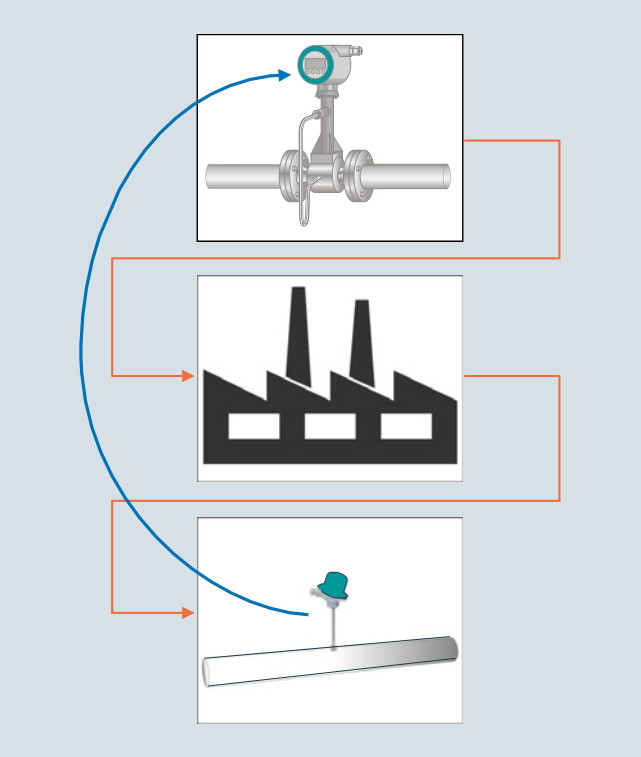

Design

SITRANS FX330 **Flange**	**SITRANS FX330** **Sandwich**
	
Flange version with integrated temperature compensation as standard for saturated steam and optional pressure compensation for superheated steam, gases and wet gases.	All advantages of the flange version in a space-saving sandwich design; centering rings guarantee an easy installation without any offset.
Integrated reduction of nominal diameter for space-saving and economic installations plus large measuring ranges.	Integrated reduction of nominal diameter not available
Also in remote design with field housing and connection cable up to 50 m (164 ft) (in preparation)	
With shut off valve allowing • exchange and calibration of pressure sensor • pressure and leak testing of pipeline without interrupting the process	

Function

Vortex flowmeters are used to measure the flow of gases, vapors and liquids in completely filled pipes. The measuring principle is based on the principle of the Karman vortex street. Inside the measuring sensor vortices are shed from a bluff body and are detected by a sensor located behind. The frequency **f** of the vortex shedding is proportional to the flow velocity **v**.

The nondimensional Strouhal number **S** describes the relationshipbetween vortex frequency **f,** width **b** of the bluff body and the mean flow velocity **v**:

f = (S . v) / b

The vortex frequency is recorded at the sensor and evaluated at the converter.

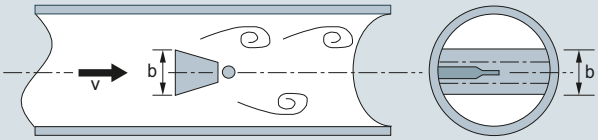

Functional principle

© Siemens 2021

Configuration

Available combinations of sensors and connection size for SITRANS FX330 in flanged design are shown in the table below.

SITRANS FX330 Flanged (7ME2610-...)										
Sensor size	**Connection size**	**EN 1092-1, Form B1/B2, PN 10**	**EN 1092-1, Form B1/B2, PN 16**	**EN 1092-1, Form B1/B2, PN 25**	**EN 1092-1, Form B1/B2, PN 40**	**EN 1092-1, Form B1/B2, PN 63**	**EN 1092-1, Form B1/B2, PN 100**	**ANSI B16.5, class 150**	**ANSI B16.5, class 300**	**ANSI B16.5, class 600**
DN15	DN 15	-	-	-	•	-	•	•	•	•
	DN 25	-	-	-	•	-	•	•	•	•
	DN 40	-	-	-	•	-	•	•	•	•
DN 25	DN 25	-	-	-	•	-	•	•	•	•
	DN 40	-	-	-	•	-	•	•	•	•
	DN 50	-	•	-	•	•	•	•	•	•
DN 40	DN 40	-	-	-	•	-	•	•	•	•
	DN 50	-	•	-	•	•	•	•	•	•
	DN 80	-	•	-	•	•	•	•	•	•
DN 50	DN 50	-	•	-	•	•	•	•	•	•
	DN 80	-	•	-	•	•	•	•	•	•
	DN 100	-	•	-	•	•	•	•	•	•
DN 80	DN 80	-	•	-	•	•	•	•	•	•
	DN 100	-	•	-	•	•	•	•	•	•
	DN 150	-	•	-	•	•	•	•	•	•
DN 100	DN 100	-	•	-	•	•	•	•	•	•
	DN 150	-	•	-	•	•	•	•	•	•
	DN 200	•	•	•	•	-	-	•	•	-
DN 150	DN 150	-	•	-	•	•	•	•	•	•
	DN 200	•	•	•	•	-	-	•	•	-
	DN 250	•	•	•	•	-	-	•	•	-
DN 200	DN 200	•	•	•	•	-	-	•	•	-
	DN 250	•	•	•	•	-	-	•	•	-
	DN 300	•	•	•	•	-	-	•	•	-
DN 250	DN 250	•	•	•	•	-	-	•	•	-
	DN 300	•	•	•	•	-	-	•	•	-
DN 300	DN 300	•	•	•	•	-	-	•	•	-

• available
- not available

© Siemens 2021

3

Technical specifications

Range of application	Flow measurement of liquids, gases and vapors	
Mode of operation		
Measuring principle	Karman vortex street	
Primary measured value	• Volume flow • Mass flow • Corrected volume flow • Density • Temperature • Pressure • Heat energy	
Design		
Transmitter		
• Compact and remote version	Cable length up to 50 m (164 ft) (in preparation)	
Sensor	Flange version	Sandwich version
• Integrated temperature measurement	•	•
• Reduction of nominal diameter	•	
• Pressure and temperature compensation	•	•
• Isolation valve	•	
• Dual measuring device	•	•
Display	4-line graphical display (backlit) with control keys	
Operation	• Via local display (languages: German, English, French) • Via SIMATIC PDM	
Accuracy		
Volume flow		
• Liquids		
- Re ≥ 20 000	± 0.75 % of measured value	
- 10 000 < Re < 20 000	± 2.0 % of measured value	
• Gases and vapors		
- Re ≥ 20 000	± 1.0 % of measured value	
- 10 000 < Re < 20 000	± 2.0 % of measured value	
Mass flow/Corrected volume flow		
• Gases and vapors		
- Re ≥ 20 000	± 1.5 % of measured value	
- 10 000 < Re < 20 000	± 2.5 % of measured value	
Mass flow		
• Liquid/water		
- Re ≥ 20 000	± 1.5 % of measured value	
- 10 000 < Re < 20 000	± 2.5 % of measured value	
Repeatability (Volume flow)	± 0.1 % of measured value	
Operating conditions		
Temperature ratings		
• Medium	-40 … +240 °C (-40 … +465 °F)	
• Ambient		
- Non-Ex	-40 … +85 °C (-40… +185 °F)	
- Ex	-40 … +65 °C (-40… +140 °F)	
• Storage	-50 … +85 °C (-58… +185 °F)	
Pressure ratings	Max. 100 bar (1450 psi), higher pressure rates on request	
Max. allowable test pressure		
• With integrated pressure sensor and isolation valve (closed)	1.5 x PN	
• With integrated pressure sensor and without isolation valve	2 times the measuring range of pressure sensor	
Process medium		
• Density	Taken into consideration when sizing	
• Viscosity	< 10 cP	
• Reynold's number	> 10000	
Recommended flow velocities		
• Liquids	0.3 ... 7 m/s (0.98 ... 23 ft/s)	
• Gases and vapors DN 15: DN 25:	2.0 ... 80 m/s (6.6 ... 262.5 ft/s) 3.0 ... 45 m/s (9.8 ... 148 ft/s) 2.0 ... 70 m/s (6.6 ... 230 ft/s)	

	For detailed information see operating instructions "Intended use"
Installation conditions	
Inlet run	
• For undisturbed flow profile, after pipe section with reducer, after 1 x 90° pipe bend	≥ 15 x DN
• After 2 x 90° pipe bend	≥ 30 x DN
• After 2 x 90° three-dimensional pipe bend	≥ 40 x DN
• After control valves	≥ 50 x DN
• Before flow conditioner	≥ 2 x DN
• After flow conditioner	≥ 8 x DN
Outlet run	≥ 5 x DN
Material	
Sensor and process connections	
• Standard	1.4404/316L
• Option	Hastelloy C22 on request
Transmitter housing	Aluminum
• Standard	Aluminum die-cast, two-layer coating (epoxy/polyester)
• Option	Die-cast aluminum with finish for advanced requirements
Pressure sensor gasket	
• Standard	FPM
• Option	FFKM
Sensor gasket (Pick-up)	
• Standard	1.4535/316L
• Option	Hastelloy C276
Process connections	
DIN EN 1092-1	DN 15 ... DN 300/PN 16 ... PN 100
ANSI B16.5	½" ... 12"/150 ... 600 lb
	For valid combinations of connection size and pressure rating see table in section Configuration
Enclosure rating	
Standard	Compact and remote version: IP66/IP67
Option	Remote version: IP66/IP68 for sensor
Power supply	
Non-Ex version	14 … 36 V DC
Ex version	14 … 30 V DC
Inputs/Outputs	
Current output	4 ... 20 mA, HART
Binary output	Pulse/Frequency/Status/Limit switch
Current input	4 ... 20 mA, passive
Communication	HART 7
Calibration	
Standard calibration	3-point calibration: 3 x 15 %, 3 x 50 %, 3 x 80 %
Special calibration	5-point calibration: 3 x 15 %, 3 x 30 %, 3 x 50 %, 3 x 60 %, 3 x 80 %
Certificates and approvals	
Ex approvals	ATEX, QPS, IECEx
CE declaration of conformity	PED 2014/68/EU EMC 2014/30/EU
Safety integration level (SIL)	SIL2 according to IEC 61508

© Siemens 2021

Selection and ordering data

	Article No.
SITRANS FX330 Flanged	
• **Not approved for SIL2 safety applications** ↗	**7ME2610-**
• **Approved for SIL2 safety applications** ↗	**7ME2611-**
	■■■■■ - ■■■■

↗ Click on the Article No. for the online configuration in the PIA Life Cycle Portal.

Sensor size	**Connection size**	
DN 15 (½")	DN 15 (½")	**1 A**
	DN 25 (1")	**1 B**
	DN 40 (1½")	**1 C**
DN 25 (1")	DN 25 (1")	**2 B**
	DN 40 (1½")	**2 C**
	DN 50 (2")	**2 D**
DN 40 (1½")	DN 40 (1½")	**2 K**
	DN 50 (2")	**2 L**
	DN 80 (3")	**2 M**
DN 50 (2")	DN 50 (2")	**2 R**
	DN 80 (3")	**2 S**
	DN 100 (4")	**2 T**
DN 80 (3")	DN 80 (3")	**3 L**
	DN 100 (4")	**3 M**
	DN 150 (6")	**3 R**
DN 100 (4")	DN 100 (4")	**3 S**
	DN 150 (6")	**3 T**
	DN 200 (8")	**3 Q**
DN 150 (6")	DN 150 (6")	**4 M**
	DN 200 (8")	**4 P**
	DN 250 (10")	**4 Q**
DN 200 (8")	DN 200 (8")	**4 T**
	DN 250 (10")	**4 U**
	DN 300 (12")	**4 V**
DN 250 (10")	DN 250 (10")	**4 W**
	DN 300 (12")	**4 Y**
DN 300 (12")	DN 300 (12")	**5 E**
Process connection and pressure rate		
EN 1092-1 Form B1		
PN 10	DN 200 ... 300	**A**
PN 16	DN 50 ... 300	**B**
PN 25	DN 200 ... 300	**C**
PN 40	DN 15 ... 300	**D**
PN 63	DN 50 ... 150	**E**
PN 100	DN 15 ... 150	**F**
ANSI B16.5 RF		
Class 150	½ ... 12"	**J**
Class 300	½ ... 12"	**K**
Class 600	½ ... 6"	**L**
System design		
Compact version	No cable	**0**
Remote version (in preparation)	Cable length with Order code L..	**1**
Transmitter housing		
Aluminum		**0**
Aluminum, silicon free		**1**
Dual version, aluminum		**6**
Dual version, aluminum, silicon free		**7**

	Article No.
SITRANS FX330 Flanged	
• **Not approved for SIL2 safety applications**	**7ME2610-**
• **Approved for SIL2 safety applications**	**7ME2611-**
	■■■■■ - ■■■■
Communication	
HART	**0**
PROFIBUS PA	**1**
FOUNDATION Fieldbus	**2**
Ex approval	
Without Ex approval	**A**
ATEX II2 G Ex ia	**B**
ATEX II2 G Ex d	**C**
ATEX II3 G Ex nA	**D**
ATEX II2 D Ex tb	**E**
QPS IS Class I Div.1	**F**
QPS XP Class I Div.1	**G**
QPS NI Class I Div. 2	**H**
QPS DIP Class I, III Div. 1	**J**
IECEx II2 G Ex ia	**K**
IECEx II2 G Ex d	**L**
IECEx II3 G Ex nA	**M**
IECEx II2 D Ex tb	**N**
Pressure sensor and gasket material	
Without pressure sensor	**A**
With pressure sensor and gasket material FPM (Viton), Range:	
1 bar (14.5 psi)	**B**
2 bar (29 psi)	**C**
4 bar (58 psi)	**D**
6 bar (87 psi)	**E**
10 bar (145 psi)	**F**
16 bar (232 psi)	**G**
25 bar (363 psi)	**H**
40 bar (580 psi)	**J**
60 bar (870 psi)	**K**
100 bar (1450 psi)	**L**
With pressure sensor and gasket material FFKM (Kalrez), Range:	
1 bar (14.5 psi)	**M**
2 bar (29 psi)	**N**
4 bar (58 psi)	**P**
6 bar (87 psi)	**Q**
10 bar (145 psi)	**R**
16 bar (232 psi)	**S**
25 bar (363 psi)	**T**
40 bar (580 psi)	**U**
60 bar (870 psi)	**V**
100 bar (1450 psi)	**W**
Software version	
Standard - Uncompensated for gases, steam and liquids including temperature compensation for saturated steam	**0**
Standard + Heat meter for saturated steam and water	**1**
Density compensation for steam + Heat meter for saturated and superheated steam	**2**
Density compensation for gases, wet gases and mixed gases + FAD	**3**

© Siemens 2021

3

Selection and ordering data

	Article No.
SITRANS FX330 Sandwich	
• Not approved for SIL2 safety applications ↗	**7ME2710-**
• Approved for SIL2 safety applications ↗	**7ME2711-**
	■■■■■-■■■■
↗ Click on the Article No. for the online configuration in the PIA Life Cycle Portal.	
Sensor size	
DN 15 (½")	**1 A**
DN 25 (1")	**2 B**
DN 40 (1½")	**2 K**
DN 50 (2")	**2 R**
DN 80 (3")	**3 L**
DN 100 (4")	**3 S**
Pressure rating	
EN 1092-1	
PN 16 — DN 15 ... 100	**B**
PN 25 — DN 15 ... 100	**C**
PN 40 — DN 15 ... 100	**D**
PN 63 — DN 15 ... 100	**E**
PN 100 — DN 15 ... 100	**F**
ANSI B16.5	
Class 150 — ½ ... 4"	**J**
Class 300 — ½ ... 4"	**K**
Class 600 — ½ ... 4"	**L**
System design	
Compact version — No cable	**0**
Remote version (in preparation) — Cable length with Order code L..	**1**
Transmitter housing	
Aluminum	**0**
Aluminum, silicon free	**1**
Communication	
HART	**0**
PROFIBUS PA	**1**
FOUNDATION Fieldbus	**2**
Ex approval	
Without Ex approval	**A**
ATEX II2 G Ex ia	**B**
ATEX II2 G Ex d	**C**
ATEX II3 G Ex nA	**D**
ATEX II2 D Ex tb	**E**
QPS IS Class I Div.1	**F**
QPS XP Class I Div.1	**G**
QPS NI Class I Div. 2	**H**
QPS DIP Class I, III Div. 1	**J**
IECEx II2 G Ex ia	**K**
IECEx II2 G Ex d	**L**
IECEx II3 G Ex nA	**M**
IECEx II2 D Ex tb	**N**

	Article No.
SITRANS FX330 Sandwich	
• Not approved for SIL2 safety applications	**7ME2710-**
• Approved for SIL2 safety applications	**7ME2711-**
	■■■■■-■■■■
Pressure sensor and gasket material	
Without pressure sensor	**A**
With pressure sensor and gasket material FPM (Viton), Range:	
1 bar (14.5 psi)	**B**
2 bar (29 psi)	**C**
4 bar (58 psi)	**D**
6 bar (87 psi)	**E**
10 bar (145 psi)	**F**
16 bar (232 psi)	**G**
25 bar (363 psi)	**H**
40 bar (580 psi)	**J**
60 bar (870 psi)	**K**
100 bar (1450 psi)	**L**
With pressure sensor and gasket material FFKM (Kalrez), Range:	
1 bar (14.5 psi)	**M**
2 bar (29 psi)	**N**
4 bar (58 psi)	**P**
6 bar (87 psi)	**Q**
10 bar (145 psi)	**R**
16 bar (232 psi)	**S**
25 bar (363 psi)	**T**
40 bar (580 psi)	**U**
60 bar (870 psi)	**V**
100 bar (1450 psi)	**W**
Software version	
Standard - Uncompensated for gases, steam and liquids including temperature compensation for saturated steam	**0**
Standard + Heat meter for saturated steam and water	**1**
Density compensation for steam + Heat meter for saturated and superheated steam	**2**
Density compensation for gases, wet gases and mixed gases + FAD	**3**
Additional information	Order code
Please add "**-Z**" to Article No. and specify as minimum Order code Y40, Y41, Y42 and Y45 and plain text.	
Application data	
Medium: Specify medium (Liquid, gas, steam or customer-specific)	**Y40**
Temperature: Specify operating temperature with unit	**Y41**
Pressure: Specify operating pressure with unit	**Y42**
Density (only for customer-specified medium): Specify density with unit	**Y43**
Viscosity (only for customer-specified medium): Specify viscosity with unit	**Y44**
Flow rate: Specify max. flow rate with units	**Y45**

Operating instruction

Description	Article No.
English	A5E2100423

All literature is available to download for free, in a range of languages, at
http://www.siemens.com/processinstrumentation/documentation

© Siemens 2021

Selection and ordering data

	Order code
Further designs	
Please add "**-Z**" to Article No. and specify Order code.	
Cable connection	
Without cable glands	**A01**
M20x1.5 cable glands made of plastic, grey	
• 3 pcs	**A02**
• 2 pcs.	**A12**
• 1 pc.	**A22**
M20x1.5 cable glands made of plastic, blue	
• 3 pcs	**A03**
• 2 pcs.	**A13**
• 1 pc.	**A23**
M20x1.5 cable glands made of brass, Ex-d/t approved	
• 3 pcs	**A04**
• 2 pcs.	**A14**
• 1 pc.	**A24**
M20x1.5 cable glands made of brass, Ex-nA approved	
• 3 pcs	**A05**
• 2 pcs.	**A15**
• 1 pc.	**A25**
M20x1.5 cable glands in stainless steel, Ex-d/t approved	
• 3 pcs	**A06**
• 2 pcs.	**A16**
• 1 pc.	**A26**
1/2" NPT conduit connection in plastic (cable glands not included)	
• 3 pcs	**A07**
• 2 pcs.	**A17**
• 1 pc.	**A27**
Isolation valve	
With isolation valve	**B10**
Certificates	
Certificate of compliance according to EN 10204-2.1	**C10**
Pressure test + Inspection certificate according to EN 10204-3.1	**C11**
Material certification of pressure bearing metal parts according to EN 10204-3.1	**C12**
Material in accordance with NACE MR0175/ISO 15156	**C13**
PMI of pressure bearing metal parts + Inspection certificate according to EN 10204-3.1	**C14**
Material certificate of pressure bearing metal parts according to EN 10204-3.1 + PMI	**C15**
Dye penetration test of wetted welds	**C16**
X-ray test of wetted welds	**C17**

	Order code
Calibration	
5-point calibration with certificate	**D11**
Cleaning	
Free of oil and grease (wetted parts)	**K46**
Free of oil and grease (wetted parts) + Inspection certificate according to EN 10204-3.1	**K48**
Cable length for remote version (in preparation)	
5 m (16 ft)	**L01**
10 m (32 ft)	**L02**
15 m (49 ft)	**L03**
20 m (65 ft)	**L04**
25 m (82 ft)	**L05**
30 m (98 ft)	**L06**
35 m (114 ft)	**L07**
40 m (131 ft)	**L08**
45 m (147 ft)	**L09**
50 m (164 ft)	**L10**
Tag name plate	
TAG name plate in stainless steel 40 × 20mm (Add plain text)	**Y17**
TAG name plate in stainless steel tag 120 × 46 mm (Add plain text)	**Y18**

© Siemens 2021

3

Selection and ordering data

SITRANS FX330 spare parts

	Article No.
Transmitter electronic for SITRANS FX330	
• FXT030 in compact design with HART (non-Ex/Ex-i)	**A5E38663070**
• FXT030 in compact design with HART (Ex-d)	**A5E38663398**
Display with HMI and data memory	**A5E38663613**
Seal disc 21.8 x12 x 0.1	**KRH-17000700**
O-ring pickup	**KRH-17001400**
O-ring for pressure screw 17.13 x 2.62, FPM 70	**KRH-17001200**
Cover gasket O-ring	**KRH-16000300**
Front Cover (non Ex)	**KRH-16002000**
Front Cover (Ex)	**KRH-16002500**
Back Cover	**KRH-16003000**
Converter housing gasket, 59,35,5-2-N	**KRH-16000400**
O-ring	
• 20 x 1, FPM (DIN 3771)	**KRH-17001100**
• 10 x 2, NBR	**KRH-17001000**
DUBOX plug 5 pole, linear, RM2	**KRH-17000800**
Cable feed through 10 pole (non Ex)	**KRH-16000500**
Shut-off valve	**KRH-17004000**
Centering rings for Sandwich-Version	
• DN 15	**KRH-17006000**
• DN 25	**KRH-17006001**
• DN 40	**KRH-17006002**
• DN 50	**KRH-17006003**
• DN 50 (300 lbs, 600 lbs)	**KRH-17006004**
• DN 50 (JIS 10K, 16K, 20K)	**KRH-17006005**
• DN 80	**KRH-17006006**
• DN 100	**KRH-17006007**
Wall housing incl. Neck (incl. Screws, Gaskets and cable glands)	**KRH-16112002**
Sensor replacement kit including seal disc, socket, pickup and O-rings (for pickup and pressure screw)	
• DN 15	**KRH-16111100**
• DN 15 Conical	**KRH-16111110**
• DN 25	**KRH-16111150**
• DN 25 Conical	**KRH-16111160**
• DN 40	**KRH-16111200**
• DN 50	**KRH-16111210**
• DN 80	**KRH-16111220**
• DN 100	**KRH-16111230**
• DN 150 ... DN 300	**KRH-16111300**
Pressure sensor replacement kit including pressure sensor with calibration certificate, DUBOX plug and O-rings	
• 1 bar	**KRH-16111350**
• 2 bar	**KRH-16111370**
• 4 bar	**KRH-16111400**
• 6 bar	**KRH-16111401**
• 10 bar	**KRH-16111402**
• 16 bar	**KRH-16111403**
• 25 bar	**KRH-16111404**
• 40 bar	**KRH-16111405**
• 60 bar	**KRH-16111406**
• 100 bar	**KRH-16111407**
SITRANS FX300 upgrade kit (in preparation)	

SITRANS FX330 Flow Straightener ↗	**7ME2900-**	■	■	■	0	0
↗ Click on the Article No. for the online configuration in the PIA Life Cycle Portal.						
Material						
Stainless steel 1.4404 (316L)		**1**				
Nominal size						
DN 15 / ANSI ½"			**A**			
DN 25 / ANSI 1"			**B**			
DN 40 / ANSI 1½"			**C**			
DN 50 / ANSI 2"			**D**			
DN 80 / ANSI 3"			**E**			
DN 100 / ANSI 4"			**F**			
DN 150 / ANSI 6"			**G**			
DN 200 / ANSI 8"			**H**			
DN 250 / ANSI 10"			**J**			
DN 300 / ANSI 12"			**K**			
Pressure rating						
PN 10				**A**		
PN 16				**B**		
PN 25				**C**		
PN 40				**D**		
PN 63				**E**		
PN 100				**F**		
Class 150				**J**		
Class 300				**K**		
Class 600				**L**		

Additional information	Order code
Please add "**-Z**" to Article No. and specify Order code.	
Certificates	
Certificate of compliance to EN 10204-2.1	**C10**
Material certification of pressure bearing parts to EN 10204-3.1	**C12**
Material in accordance with NACE MR0175/ISO 15156	**C13**
PMI of pressure bearing parts + Inspection certificate according to EN 10204-3.1	**C14**
Material certificate of pressure bearing parts according to EN 10204-3.1 + PMI	**C15**
Cleaning	
Free of oil and grease (wetted parts)	**K46**
Free of oil and grease (wetted parts) + Inspection certificate according to EN 10204-3.1	**K48**

© Siemens 2021

Dimensional drawings

Compact version

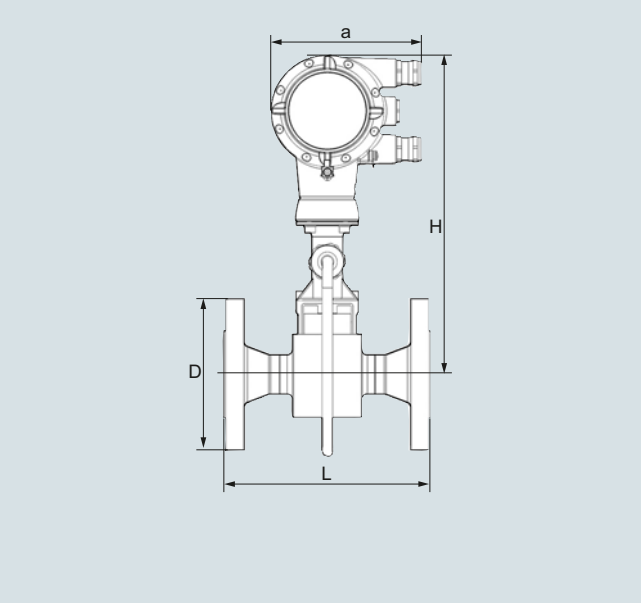

SITRANS FX330 (Vortex), Flanged version with pressure sensor, front view

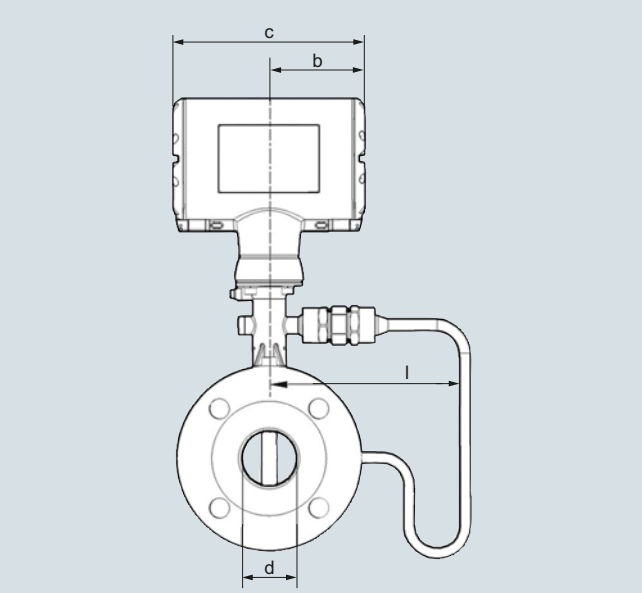

SITRANS FX330 (Vortex), Flanged version with pressure sensor, side view

© Siemens 2021

Dimensional drawings (continued)

Flange version EN 1092-1

Size	Pressure rating	Dimensions [mm (inch)] a = 148.5 (5.85), b = 85.8 (3.38), c = 171.5 (6.76)							Weight [kg (lb)]	
DN	PN	d	d FR[1)]	d FR[2)]	D	L	H	I	Flowmeter (without pressure sensor)	Flowmeter (with pressure sensor)
15	40	17.3 (0.68)	-	-	95 (3.74)	200 (7.87)	358.8 (14.2)	169.3 (6.67)	5.5 (12.13)	6.1 (13.45)
15	100	17.3 (0.68)	-	-	105 (4.13)	200 (7.87)	358.8 (14.2)	169.3 (6.67)	6.5 (14.33)	7.1 (15.65)
25	40	28.5 (1.12)	17.3 (0.68)	-	115 (4.53)	200 (7.87)	358.4 (14.1)	169.3 (6.67)	7.3 (16.09)	7.9 (17.42)
25	100	28.5 (1.12)	17.3 (0.68)	-	140 (5.51)	200 (7.87)	358.4 (14.1)	169.3 (6.67)	9.3 (20.50)	9.9 (21.83)
40	40	43.1 (1.70)	28.5 (1.12)	17.3 (0.68)	150 (5.91)	200 (7.87)	362.3 (14.3)	169.5 (6.67)	10.2 (22.49)	10.8 (23.81)
40	100	42.5 (1.67)	28.5 (1.12)	17.3 (0.68)	170 (6.69)	200 (7.87)	362.3 (14.3)	169.5 (6.67)	14.2 (31.31)	14.8 (32.63)
50	16	54.5 (2.15)	42.5 (1.67)	28.5 (1.12)	165 (6.50)	200 (7.87)	368.3 (14.5)	169.3 (6.67)	12.1 (26.68)	12.7 (28.00)
50	40	54.5 (2.15)	42.5 (1.67)	28.5 (1.12)	165 (6.50)	200 (7.87)	368.3 (14.5)	169.3 (6.67)	12.3 (27.12)	12.9 (28.44)
50	63	54.5 (2.15)	42.5 (1.67)	28.5 (1.12)	180 (7.09)	200 (7.87)	368.3 (14.5)	169.3 (6.67)	16.3 (35.94)	16.9 (37.26)
50	100	53.9 (2.12)	42.5 (1.67)	28.5 (1.12)	195 (7.68)	200 (7.87)	368.3 (14.5)	169.3 (6.67)	17.8 (39.24)	18.4 (40.57)
80	16	82.5 (3.25)	54.5 (2.15)	42.5 (1.67)	200 (7.87)	200 (7.87)	380.3 (15.0)	169.3 (6.67)	16.8 (37.04)	17.4 (38.36)
80	40	82.5 (3.25)	54.5 (2.15)	42.5 (1.67)	200 (7.87)	200 (7.87)	380.3 (15.0)	169.3 (6.67)	18.8 (41.45)	19.4 (42.77)
80	63	81.7 (3.22)	54.5 (2.15)	42.5 (1.67)	215 (8.46)	200 (7.87)	380.3 (15.0)	169.3 (6.67)	22.8 (50.27)	23.4 (51.59)
80	100	80.9 (3.19)	54.5 (2.15)	42.5 (1.67)	230 (9.06)	200 (7.87)	380.3 (15.0)	169.3 (6.67)	26.8 (59.08)	27.4 (60.41)
100	16	107 (4.21)	80.9 (3.19)	54.5 (2.15)	220 (8.66)	250 (9.84)	396.8 (15.7)	171.5 (6.75)	21.4 (47.18)	22 (48.50)
100	40	107 (4.21)	80.9 (3.19)	54.5 (2.15)	235 (9.25)	250 (9.84)	396.8 (15.7)	171.5 (6.75)	24.4 (53.79)	25 (55.12)
100	63	106 (4.17)	80.9 (3.19)	54.5 (2.15)	250 (9.84)	250 (9.84)	396.8 (15.7)	171.5 (6.75)	29.4 (64.82)	30 (66.14)
100	100	104 (4.09)	80.9 (3.19)	54.5 (2.15)	265 (10.43)	250 (9.84)	396.8 (15.7)	171.5 (6.75)	35.4 (78.04)	36 (79.37)
150	16	159 (6.26)	107 (4.21)	80.9 (3.19)	285 (11.22)	300 (11.81)	416.3 (16.4)	191.5 (7.54)	35.2 (77.60)	35.8 (78.93)
150	40	159 (6.26)	107 (4.21)	80.9 (3.19)	300 (11.81)	300 (11.81)	416.3 (16.4)	191.5 (7.54)	41.2 (90.83)	41.8 (92.15)
150	63	157 (6.18)	107 (4.21)	80.9 (3.19)	345 (13.58)	300 (11.81)	416.3 (16.4)	191.5 (7.54)	59.2 (130.51)	59.8 (131.84)
150	100	154 (6.06)	107 (4.21)	80.9 (3.19)	355 (13.98)	300 (11.81)	416.3 (16.4)	191.5 (7.54)	67.2 (148.15)	67.8 (149.47)
200	10	207 (8.15)	159 (6.26)	107 (4.21)	340 (13.39)	300 (11.81)	442.1 (17.4)	202.8 (7.98)	37.8 (83.33)	38.4 (84.66)
200	16	207 (8.15)	159 (6.26)	107 (4.21)	340 (13.39)	300 (11.81)	442.1 (17.4)	202.8 (7.98)	37.8 (83.33)	38.4 (84.66)
200	25	207 (8.15)	159 (6.26)	107 (4.21)	360 (14.17)	300 (11.81)	442.1 (17.4)	202.8 (7.98)	46.8 (103.18)	47.4 (104.50)
200	40	207 (8.15)	159 (6.26)	107 (4.21)	375 (14.76)	300 (11.81)	442.1 (17.4)	202.8 (7.98)	54.8 (120.81)	55.4 (122.14)
250	10	260 (10.24)	207 (8.15)	159.3 (6.27)	395 (15.55)	380 (14.96)	468.8 (18.5)	229.5 (9.04)	57.4 (126.55)	58.0 (127.87)
250	16	260 (10.24)	207 (8.15)	159.3 (6.27)	405 (15.94)	380 (14.96)	468.8 (18.5)	229.5 (9.04)	58.4 (128.75)	59.0 (130.07)
250	25	259 (10.20)	207 (8.15)	159.3 (6.27)	425 (16.73)	380 (14.96)	468.8 (18.5)	229.5 (9.04)	74.4 (164.02)	75.0 (165.35)
250	40	259 (10.20)	207 (8.15)	159.3 (6.27)	450 (17.72)	380 (14.96)	468.8 (18.5)	229.5 (9.04)	92.4 (203.71)	93.0 (205.03)
300	10	310 (12.20)	260 (10.24)	207 (8.15)	445 (17.52)	450 (17.72)	492.8 (19.4)	255 (10.04)	75.7 (166.89)	76.3 (168.21)
300	16	310 (12.20)	260 (10.24)	207 (8.15)	460 (18.11)	450 (17.72)	492.8 (19.4)	255 (10.04)	82.2 (181.22)	82.8 (182.54)
300	25	308 (12.13)	260 (10.24)	207 (8.15)	485 (19.09)	450 (17.72)	492.8 (19.4)	255 (10.04)	98.7 (217.60)	99.3 (218.92)
300	40	308 (12.13)	260 (10.24)	207 (8.15)	515 (20.28)	450 (17.72)	492.8 (19.4)	255 (10.04)	127.5 (281.09)	128.1 (282.41)

1) FR - single reduction

2) F2R - double reduction

© Siemens 2021

Dimensional drawings (continued)

Flange version ANSI B16.5

Size	Pressure rating	Dimensions [mm (inch)] a = 148.5 (5.85), b = 85.8 (3.38), c = 171.5 (6.76)							Weight [kg (lb)]	
DN	Class	d	d FR[1)]	d FR[2)]	D	L	H	I	Flowmeter (without pressure sensor)	Flowmeter (with pressure sensor)
½	150	16 (0.63)	-	-	90 (3.5)	200 (7.9)	358.8 (14.2)	169.3 (6.67)	4.5 (9.92)	5.1 (11.24)
½	300	16 (0.63)	-	-	95 (3.7)	200 (7.9)	358.8 (14.2)	169.3 (6.67)	4.9 (10.80)	5.5 (12.13)
½	600	14 (0.55)	-	-	95 (3.7)	200 (7.9)	358.8 (14.2)	169.3 (6.67)	5.1 (11.24)	5.7 (12.57)
1	150	27 (1.1)	15.8 (0.62)	-	110 (4.3)	200 (7.9)	358.4 (14.1)	169.3 (6.67)	6.2 (13.67)	6.8 (14.99)
1	300	27 (1.1)	15.8 (0.62)	-	125 (4.9)	200 (7.9)	358.4 (14.1)	169.3 (6.67)	7.2 (15.87)	7.8 (17.20)
1	600	24 (1.0)	15.8 (0.62)	-	125 (4.9)	200 (7.9)	358.4 (14.1)	169.3 (6.67)	7.5 (16.53)	8.1 (17.86)
1½	150	41 (1.6)	26.6 (1.1)	15.8 (0.6)	125 (4.9)	200 (7.9)	362.3 (14.3)	169.5 (6.67)	8.3 (18.30)	8.9 (19.62)
1½	300	41 (1.6)	26.6 (1.1)	15.8 (0.6)	155 (6.1)	200 (7.9)	362.3 (14.3)	169.5 (6.67)	10.4 (22.93)	11 (24.25)
1½	600	38 (1.5)	26.6 (1.1)	15.8 (0.6)	155 (6.1)	200 (7.9)	362.3 (14.3)	169.5 (6.67)	11.4 (25.13)	12 (26.46)
2	150	53 (2.1)	40.9 (1.6)	26.6 (1.1)	150 (5.9)	200 (7.9)	368.3 (14.5)	169.5 (6.67)	11 (24.25)	11.6 (25.57)
2	300	53 (2.1)	40.9 (1.6)	26.6 (1.1)	165 (6.5)	200 (7.9)	368.3 (14.5)	169.5 (6.67)	12.4 (27.34)	13 (28.66)
2	600	49 (1.9)	40.9 (1.6)	26.6 (1.1)	165 (6.5)	200 (7.9)	368.3 (14.5)	169.5 (6.67)	13.9 (30.64)	14.5 (31.97)
3	150	78 (3.1)	52.6 (2.1)	40.9 (1.6)	190 (7.5)	200 (7.9)	380.3 (15.0)	169.3 (6.67)	19.8 (43.65)	20.4 (44.97)
3	300	78 (3.1)	52.6 (2.1)	40.9 (1.6)	210 (8.3)	200 (7.9)	380.3 (15.0)	169.3 (6.67)	22.8 (50.27)	23.4 (51.59)
3	600	74 (2.9)	52.6 (2.1)	40.9 (1.6)	210 (8.3)	200 (7.9)	380.3 (15.0)	169.3 (6.67)	23.8 (52.47)	24.4 (53.79)
4	150	102 (4.0)	78 (3.1)	52.6 (2.1)	230 (9.1)	250 (9.8)	396.8 (15.7)	171.5 (6.76)	23.4 (51.59)	24 (52.91)
4	300	102 (4.0)	78 (3.1)	52.6 (2.1)	255 (10)	250 (9.8)	396.8 (15.7)	171.5 (6.76)	31.4 (69.23)	32 (70.55)
4	600	97 (3.8)	78 (3.1)	52.6 (2.1)	275 (11)	250 (9.8)	396.8 (15.7)	171.5 (6.76)	40.4 (89.07)	41 (90.39)
6	150	154 (6.1)	102 (4.0)	78.0 (3.1)	280 (11)	300 (12)	416.3 (16.4)	191.5 (7.54)	36.2 (79.81)	36.8 (81.13)
6	300	154 (6.1)	102 (4.0)	78.0 (3.1)	320 (13)	300 (12)	416.3 (16.4)	191.5 (7.54)	51.2 (112.88)	51.8 (114.20)
6	600	146 (5.8)	102 (4.0)	78.0 (3.1)	355 (14)	300 (12)	416.3 (16.4)	191.5 (7.54)	76.2 (167.99)	76.8 (169.31)
8	150	203 (8.0)	154 (6.1)	102 (4.0)	345 (14)	300 (12)	442.1 (17.4)	202.8 (8.0)	50.0 (110.23)	50.6 (111.55)
8	300	203 (8.0)	154 (6.1)	102 (4.0)	380 (15)	300 (12)	442.1 (17.4)	202.8 (8.0)	74.8 (164.91)	75.4 (166.23)
10	150	255 (10.0)	203 (8.0)	154 (6.1)	405 (16)	380 (15)	468.8 (18.5)	229.5 (9.04)	74.4 (164.02)	75.0 (165.35)
10	300	255 (10.0)	203 (8.0)	154 (6.1)	455 (18)	380 (15)	468.8 (18.5)	229.5 (9.04)	106.4 (234.57)	107.0 (235.89)
12	150	305 (12.0)	255 (10.0)	203 (8.0)	485 (19)	450 (18)	492.8 (19.4)	255 (10.0)	106.4 (234.35)	107.0 (235.67)
12	300	305 (12.0)	255 (10.0)	203 (8.0)	520 (21)	450 (18)	492.8 (19.4)	255 (10.0)	151.4 (333.56)	152.0 (334.88)

[1)] FR - single reduction

[2)] F2R - double reduction

© Siemens 2021

3

Dimensional drawings (continued)

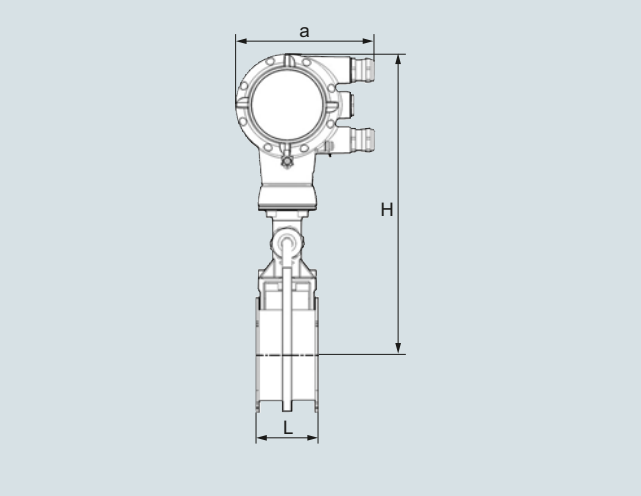

SITRANS FX330 (Vortex), Sandwich version with pressure sensor, front view

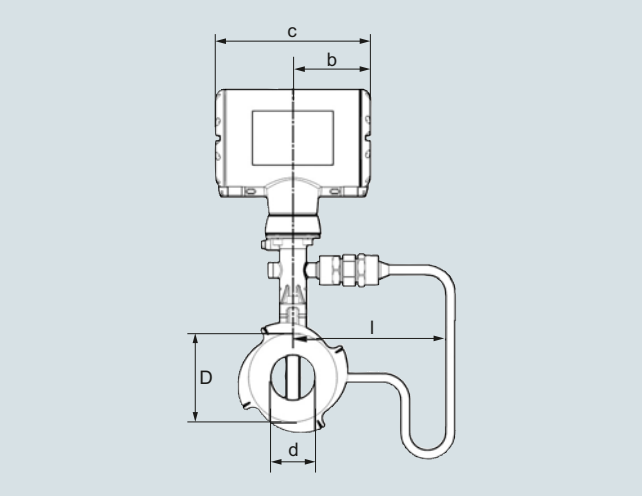

SITRANS FX330 (Vortex), Sandwich version with pressure sensor, side view

Sandwich version EN

Size	Pressure rating	Dimensions [mm (inch)]								Weight [kg (lb)]	
DN	PN	a	b	c	d	D	L	H	l	Flowmeter (without pressure sensor)	Flowmeter (with pressure sensor)
15	16 ... 100	133 (5.24)	105 (4.13)	179 (7.05)	16 (0.63)	45 (1.77)	65 (2.56)	265 (10.43)	174.25 (6.86)	3.5 (7.72)	4.1 (9.04)
25	16 ... 100	133 (5.24)	105 (4.13)	179 (7.05)	24 (0.94)	65 (2.56)	65 (2.56)	265 (10.43)	174.25 (6.86)	4.3 (9.48)	4.9 (10.80)
40	16 ... 100	133 (5.24)	105 (4.13)	179 (7.05)	38 (1.50)	82 (3.23)	65 (2.56)	270 (10.63)	174.5 (6.87)	4.9 (10.80)	5.5 (12.13)
50	16 ... 100	133 (5.24)	105 (4.13)	179 (7.05)	50 (1.97)	102 (4.02)	65 (2.56)	275 (10.83)	174.5 (6.87)	6 (13.23)	6.6 (14.55)
80	16 ... 100	133 (5.24)	105 (4.13)	179 (7.05)	74 (2.91)	135 (5.31)	65 (2.56)	290 (11.42)	174.25 (6.86)	8.2 (18.08)	8.8 (19.40)
100	16 ... 100	133 (5.24)	105 (4.13)	179 (7.05)	97 (3.82)	158 (6.22)	65 (2.56)	310 (12.20)	176.5 (6.95)	9.5 (20.94)	10.1 (22.27)

Sandwich version ANSI

Size	Pressure rating	Dimensions [inch]								Weight [lb]	
DN	Class	a	b	c	d	D	L	H	l	Flowmeter (without pressure sensor)	Flowmeter (with pressure sensor)
½"	150, 300	5.32	4.26	7.25	0.63	1.77	2.56	10.43	6.82	7.72	9.04
½"	600	5.32	4.26	7.25	0.55	1.77	2.56	10.43	6.82	7.72	9.04
1"	150, 300, 600	5.32	4.26	7.25	0.94	2.56	2.56	10.43	6.82	9.48	10.80
1½"	150, 300, 600	5.32	4.26	7.25	1.50	3.23	2.56	10.63	6.82	10.80	12.13
2"	150, 300, 600	5.32	4.26	7.25	1.97	4.02	2.56	10.83	6.82	13.23	14.55
3"	150, 300, 600	5.32	4.26	7.25	2.91	5.31	2.56	11.42	6.82	18.08	19.40
4"	150, 300, 600	5.32	4.26	7.25	3.82	6.22	2.56	12.20	6.82	20.94	22.27

© Siemens 2021

Dimensional drawings (continued)

Remote version

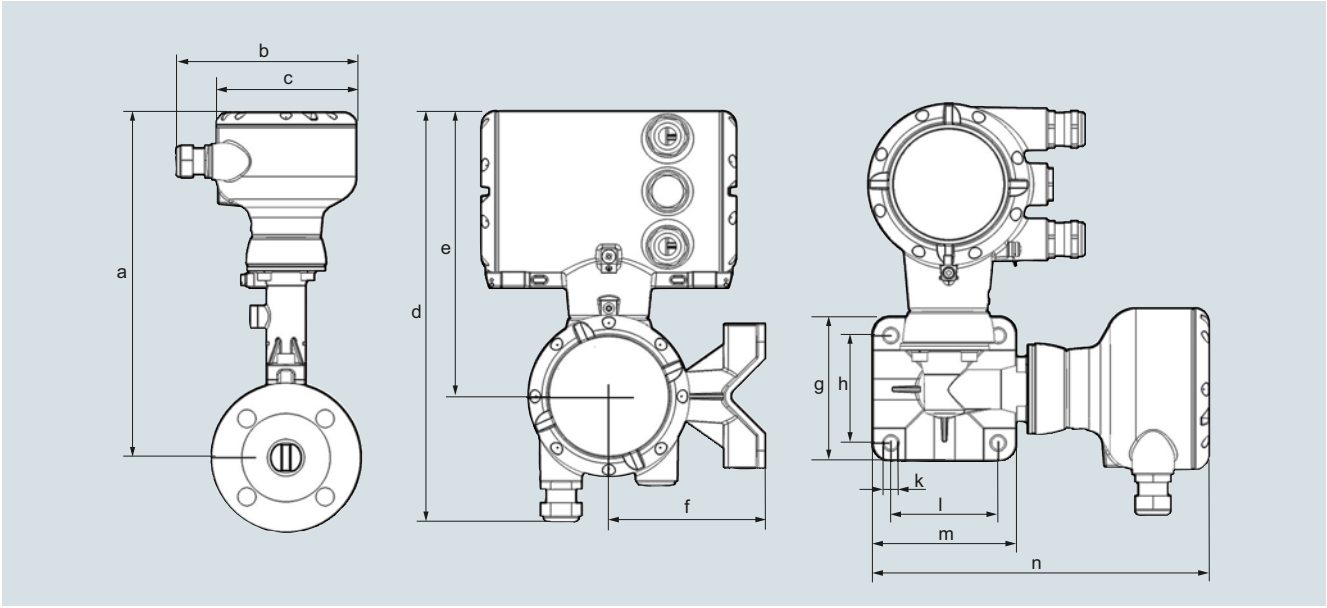

SITRANS FX330 (Vortex), Remote version

Dimension a

	Flanged and Sandwich version						Flanged version			
DN	**15**	**25**	**40**	**50**	**80**	**100**	**150**	**200**	**250**	**300**
	½"	**1"**	**1½"**	**2"**	**3"**	**4"**	**6"**	**8"**	**10"**	**12"**
[mm]	265.7	265.2	269.2	275.2	287.2	303.7	323.2	348.9	375.7	399.7
[inch]	10.5	10.4	10.6	10.8	11.3	12.0	12.7	13.7	14.8	15.7

Dimension a F1/2R

	Flanged version									
DN	**15**	**25**	**40**	**50**	**80**	**100**	**150**	**200**	**250**	**300**
	½"	**1"**	**1½"**	**2"**	**3"**	**4"**	**6"**	**8"**	**10"**	**12"**
F1R[1] [mm]	-	315.7	315.2	319.2	325.2	337.2	353.7	373.2	398.9	425.7
F1R[1] [inch]	-	12.4	12.4	12.6	12.8	13.3	13.9	14.7	15.7	16.8
F2R[2] [mm]	-	-	315.7	315.2	319.2	325.2	337.2	353.7	373.2	398.9
F2R[2] [inch]	-	-	12.4	12.4	12.6	12.8	13.3	13.9	14.7	15.7

Dimension b ... n

	b	c	d	e	f	g	h	j	k	l	m	n
[mm]	139	108	276	191	105	97	72	108	9	72	97	226
[inch]	5.46	4.25	10.9	7.53	4.14	3.82	2.84	4.25	0.35	2.84	3.82	8.90

© Siemens 2021

Dimensional drawings (continued)

Flow tables

Measuring Range Limits

Water

Size DN to EN 1092-1	DN to NSI B16.5	Q_{min} EN 1092-1 [m^3/h]	Q_{max} EN 1092-1 [m^3/h]	Q_{min} ANSI B16.5 [m^3/h]	Q_{max} ANSI B16.5 [m^3/h]
15	½"	0.45	5.07	0.44	4.94
25	1"	0.81	11.40	0.81	11.40
40	1½"	2.04	28.58	2.04	28.58
50	2"	3.53	49.48	3.53	49.48
80	3"	7.74	108.37	7.74	108.37
100	4"	13.30	186.22	13.30	186.21
150	6"	30.13	421.86	30.13	421.86
200	8"	56.60	792.42	56.60	792.42
250	10"	90.48	1 266.8	90.48	1 266.8
300	12"	131.41	1 839.8	131.41	1 839.8

Values based on water at 20 °C (68 °F)

Air

Size DN to EN 1092-1	DN to ANSI B16.5	Q_{min} EN 1092-1 [m^3/h]	Q_{max} EN 1092-1 [m^3/h]	Q_{min} ANSI B16.5 [m^3/h]	Q_{max} ANS B16.5 [m^3/h]
15	½"	6.80	25.33	6.72	24.70
25	1"	10.20	81.43	10.20	81.43
40	1½"	25.35	326.63	25.35	326.63
50	2"	43.89	565.49	43.89	565.49
80	3"	96.14	1 238.64	96.14	1 238.6
100	4"	165.19	2 128.27	165.19	2 128.27
150	6"	374.23	4 821.60	374.23	4 821.6
200	8"	702.95	9 056.8	702.95	9 056.8
250	10"	1 123.7	14 478.0	1 123.7	14 478.0
300	12"	1 632.1	21 028.0	1 632.1	21 028.0

Values based on air at 20 °C (68 °F) and 1.013 bar_{abs} (14.7 psi_{abs})

Flow rate limits

Product	Nominal sizes to EN	to ANSI	Minimum flow rates [m/s]	Maximum flow rates [m/s]
Liquids	DN 15 … DN 300	DN ½"…DN 12"	$0.5 \times (998/\rho)^{0.51)}$	$7 \times (998/\rho)^{0.47\ 1)}$
Gas, steam/vapor	DN 15 … DN 300	DN ½"…DN 12"	$6 \times (1.29/\rho)^{0.52)}$	$7 \times (998/\rho)^{0.47\ 3)}$

ρ = operating density [kg/m^3]

1) Minimum flow rate 0.3 m/s (0.984 ft/s) - maximum flow rate 7 m/s (23 ft/s)

2) Minimum flow rate 2 m/s (6.6 ft/s)

3) Maximum flow rate 80 m/s (262 ft/s); DN 15: 45 m/s (148 ft/s) and DN 25: 70 m/s (230 ft/s)

© Siemens 2021

Dimensional drawings (continued)

Measuring range saturated steam: 1 to 7 bar

Overpressure [bar]		**1**		**3.5**		**5.2**		**7**	
Density [kg/m³]		**1.13498**		**2.4258**		**3.27653**		**4.16732**	
Temperature [°C]		**120.6**		**148.2**		**160.4**		**170.6**	
Flow [kg/h]		**min.**	**max.**	**min.**	**max.**	**min.**	**max.**	**min.**	**max.**
DN to EN 1092-1	**DN to ASME B16.5**								
15	½"	5.87	28.75	7.68	61.46	8.93	83.01	10.06	105.57
25	1"	11.82	92.42	17.28	197.53	20.09	266.81	22.66	339.35
40	1½"	29.64	370.71	43.33	792.33	50.63	1 070.2	56.80	1 361.2
50	2"	51.31	641.82	75.02	1 371.8	87.19	1 852.8	98.33	2 356.6
80	3"	112.41	1 405.8	164.33	3 004.7	191.00	4 058.4	215.39	5 161.8
100	4"	193.14	2 415.5	282.36	5 162.7	328.16	6 973.3	370.09	8 869.2
150	6"	437.56	5 472.4	639.69	11 696.0	743.45	15 798.0	838.44	20 093.0
200	8"	821.9	10 279.0	1 201.6	21 970.0	1 396.5	29 675.0	1 574.9	37 743.0
250	10"	1 313.9	16 433.0	1 920.9	35 122.0	2 232.5	47 439.0	2 517.7	60 337.0
300	12"	1 908.3	23 866.0	2 789.8	51 010.0	3 242.4	68 899.0	3 656.6	87 630.0

Measuring range saturated steam: 10.5 to 20 bar

Overpressure [bar]		**10.5**		**14.0**		**17.5**		**20.0**	
Density [kg/m³]		**5.88803**		**7.60297**		**9.31702**		**10.5442**	
Temperature [°C]		**186.2**		**198.5**		**208.7**		**215.0**	
Flow [kg/h]		**min.**	**max.**	**min.**	**max.**	**min.**	**max.**	**min.**	**max.**
DN to EN 1092-1	**DN to ANSI B16.5**								
15	½"	12.78	149.17	16.51	192.61	20.23	236.04	22.89	267.12
25	1"	26.93	479.46	30.60	619.11	33.87	758.69	36.04	858.62
40	1½"	67.51	1 878.2	76.72	2 150.7	84.93	2 395.3	90.35	2 557.7
50	2"	116.89	3 251.7	132.82	3 723.4	147.03	4 147.0	156.42	4 428.1
80	3"	256.03	7 122.4	290.93	8 155.8	322.06	9 083.7	342.62	9 699.3
100	4"	439.91	12 238	499.90	14 013.0	553.38	15 608.0	588.69	16 666.0
150	6"	996.62	27 725.0	1 132.5	31 747.0	1 253.7	35 359.0	1 333.7	37 756.0
200	8"	1 872.1	52 079.0	2 127.3	59 634.0	2 354.9	66 419.0	2 505.2	70 921.0
250	10"	2 992.7	83 254.0	3 400.7	95 333.0	3 764.6	106 180.0	4 004.9	113 380.0
300	12"	4 346.5	120 920.0	4 939.1	138 460.0	5 467.5	154 210.0	5 816.5	164 660.0

© Siemens 2021

3

Dimensional drawings (continued)

Measuring range saturated steam: 15 to 100 psig

Overpressure [psig]		15		50		75		100	
Density [lbs/ft³]		0.0719		0.1497		0.2036		0.2569	
Temperature [°F]		249.98		297.86		320.36		338.184	
Flow [lbs/h]		min.	max.	min.	max.	min.	max.	min.	max.
DN to EN 1092-1	DN to ANSI B16.5								
15	½"	12.95	64.35	16.83	133.87	19.62	182.02	22.04	229.63
25	1"	26.25	206.83	37.86	430.30	44.15	585.06	49.59	738.09
40	1½"	65.81	829.61	94.92	1 726	110.68	2 346.7	124.32	2 960.5
50	2"	113.94	1 436.3	164.34	2 988	191.63	4 062.9	215.23	5 125.6
80	3"	249.57	3 146.1	360.00	6 545.3	419.74	8 899.4	471.45	11 227
100	4"	428.81	5 405.7	618.51	11 246	721.21	15 291	810.06	19 291
150	6"	971.47	12 246	1 401.2	25 478	1 633.9	34 642	1 835.2	43 703
200	8"	1 824.8	23 004	2 632.1	47 859	3 069.1	65 072	3 447.2	82 092
250	10"	2 917.2	36 774	4 207.7	76 508	4 906.4	104 030	5 510.8	131 230
300	12"	4 236.8	53 410	6 111.1	111 120	7 125.8	151 080	8 003.6	190 600

Measuring range saturated steam: 150 to 300 psig

Overpressure [psig]		150		200		250		300	
Density [lbs/ft³]		0.3627		0.4681		0.5735		0.6792	
Temperature [°F]		366.08		388.04		406.22		422.06	
Flow [lbs/h]		min.	max.	min.	max.	min.	max.	min.	max.
DN to EN 1092-1	DN to ANSI B16.5								
15	½"	27.79	324.21	35.86	418.47	43.94	512.66	52.04	607.12
25	1"	58.93	1 042.1	66.94	1 345.1	74.10	1 647.8	80.63	1 951.5
40	1½"	147.72	4 107.2	167.83	4 702.8	185.76	5 237	202.15	5 728
50	2"	255.75	7 111.9	290.56	8 141.9	321.60	9 066.8	350.00	9 917
80	3"	560.19	15 578	636.44	17 834	704.43	19 860	766.60	21 722
100	4"	962.54	26 766	1 093.5	30 643	1 210.4	34 124	1 317.2	37 324
150	6"	2 180.6	60 639	2 477.4	69 421	2 742.1	77 307	2 984	84 556
200	8"	4 096.1	113 900	4 653.6	130 400	5 150.7	145 210	5 605.2	158 830
250	10"	6 548.1	182 090	7 439.3	208 460	8 234.1	232 140	8 960.6	253 910
300	12"	9 510.2	264 460	10 805	302 760	11 959	337 150	13 014	368 770

© Siemens 2021

Overview



SITRANS FVA250 variable area meter

Benefits

- Standard version available at short notice
- Robust all-metal valve with impact-resistant housing cover
- Can also be used for corrosive and flammable media
- Can be used at high pressures and temperatures
- Product and percentage scales
- Can be optionally fitted with heating and cooling sheaths
- Contamination-resistant guiding for float

Application

The devices are particularly suitable for measuring:

- Water
- Liquids
- Anti-corrosives and lubricants
- Solvents
- Saturated and superheated steam
- Food and beverages
- Industrial gases

Design

Due to its full metal design, the SITRANS FVA250 variable area meter with a standard length of 250 mm (9.84 inch) can be used to measure many different types of liquids and gases passing through closed piping. The robust design means that it can also be used in harsh conditions. The various types of flange connections, linings and float materials satisfy the requirements of the pharmaceutical and chemical industries.

The measured value is displayed directly on the scale with the standard version. For process monitoring and control, the device can be equipped with a transmitter (MEM) as well as limit switches.

Function

Flow measurement with the SITRANS FVA250 is performed according to the float principle. The flowing medium lifts the conical float in the measuring ring. This increases the ring gap until an equilibrium is established between the buoyant force of the medium and the weight of the float. The height of the float is directly proportional to the flow rate. The movement of the float is transmitted from one magnet to another magnet in the display unit outside of the measuring tube.

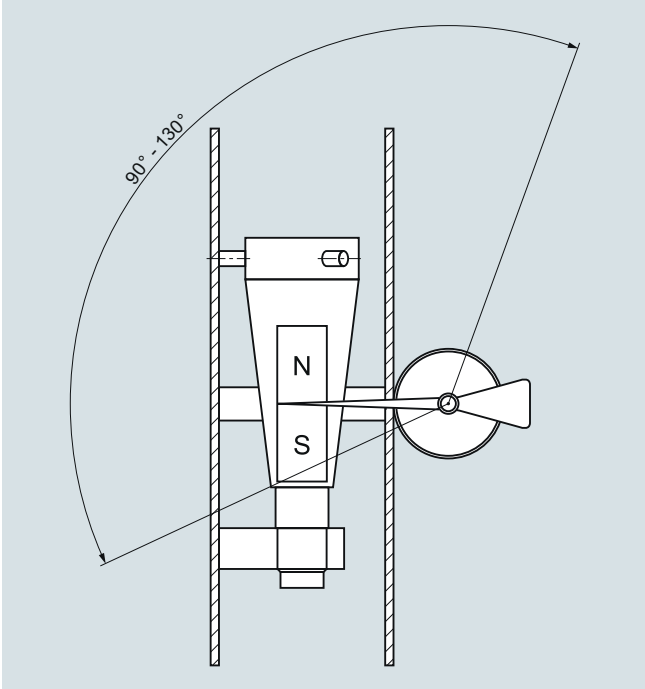

Measuring cone/scale angle

© Siemens 2021

Technical specifications

Application	See page 3/395
Design and function	See page 3/395
Principle of measurement	Variable-area flowmeter
Input	
Measuring range	See table on page 3/397
Pressure ratings	PN 16 to PN 100 (232 to 1 450 psi) depending on the version (see table on page 3/397)
Installation / flow direction	Vertical/from bottom to top
Rated conditions	
Ambient temperature	
• With local display	-40 ... +80 °C (-40 ... +176 °F)
• With limit switches	-40 ... +65 °C (-40 ... +149 °F)
• With electric remote encoder (MEM)	-40 ... +70 °C (-40 ... +158 °F)
Measuring accuracy acc. to VDI/VDE 3513-2	
• For liquids	± 1.6 % (q_G = 50 %)
• For gases	± 2.0 % (q_G = 50 %)
Reproducibility	0.5 % of the measuring range limit (URV)
Operating temperature	See page 3/397
Operating pressure	Minimum operating pressure > 2x pressure drop (see table on page 3/397)
Design	
Flanges	EN 1092-1, ANSI B16.5
Material	
• Fitting	Stainless steel, Hastelloy
• Float	Stainless steel, Hastelloy, PTFE
• Wetted parts materials	Stainless steel, PTFE, Hastelloy depending on version
Degree of protection (display unit)	
• Display unit made of aluminum	IP65
• Display unit made of stainless steel	IP66
Electromagnetic compatibility	
• EN 61000-6-2: 2011	Interference immunity industrial sector
• EN 61000-6-3	Interference immunity residential sector
• EN 55011: 2011	Group 1, Class B
• NAMUR recommendation	NE 21

Classification according to pressure equipment directive (PED 2014/68/EU)

	Article No. 7ME586.-	Permissible media	Category
DN 15	xAxxx-xxxx	Gases of fluid group 1 and liquids of fluid group 1	Article 4.3
DN 20	xBxxx-xxxx		Article 4.3
DN 25	xCxxx-xxxx		Article 4.3
DN 32	xDxxx-xxxx		III
DN 40	xExxx-xxxx		III
DN 50	xFxxx-xxxx		III
DN 65	xGxxx-xxxx		III
DN 80	xHxxx-xxxx		III
DN 100	xJxxx-xxxx		III

Technical specifications of contacts

Limit switch	
Cable gland	M20x1.5
Auxiliary power supply	5 ... 25 V DC
Isolation (2 contacts)	Electrically isolated
Limit switch	SJ3.5-N-BU
• Switching function	NAMUR NC
Nominal voltage U_O	8.2 V DC (R_i approx. 1 kΩ)
Explosion protection	II 2G EEx ia IIC T6 - T4 Gb
EC Type Examination Certificate for Directive 2014/34/EU	PTB 99 ATEX 2219 X
Transmitter (MEM) with 4 to 20 mA, pulse output and limit switch	
Cable gland	M20x1.5
Auxiliary power supply	14 ... 30 V DC
Analog output	4 ... 20 mA (2-wire)
Binary output	Pulses, limit switch
• Pulses	Max. pulse rate 10 Hz
• Limit switch	SJ3.5-N-BU (NAMUR, IEC 60947-5-6:1999)
Temperature influence	≤ ± 0.5% of the measuring range limit (URV)/10 K
Explosion protection	II 2G Ex ia IIC T6 Gb
EC Type Examination Certificate for Directive 2014/34/EU	BVS 07 ATEX E 033
Transmitter (MEM) PROFIBUS PA	
Cable gland	M20x1.5
Auxiliary power supply	10 ... 25 V DC
Basic current	< 16.5 mA
Fault current	< 18 mA
Transfer rate	31.25 Kbaud
Temperature influence	≤ ± 0.5% of the measuring range limit (URV)/10 K
Explosion protection	II 2G Ex ia IIC T6 Gb
EC Type Examination Certificate for Directive 2014/34/EU	BVS 07 ATEX E 033

Float damping

Float damping is recommended

- Generally for gas measurement
- When air bubbles in the medium cannot be avoided
- When there are pressure surges in the lines caused by a delay in the flow, for example, due to rapid throttling or blocking
- When turbulence, pulsations or other instabilities cause the float to vibrate
- When the flow pressure cannot be built up slowly
- When vibrations in the line cannot be avoided

© Siemens 2021

Technical specifications (continued)

Measuring range availability guide

Version	CF-S	EF-H	FF-P
Wetted parts materials	Mat. No. 1.4404/AISI 316L	Hastelloy	PTFE
Fitting	Mat. No. 1.4404/AISI 316L	≤ DN 25 (1"): Hastelloy > DN 25 (1"): Hastelloy/Mat. No. 1.4404/AISI 316L	Mat. No. 1.4404/AISI 316L with PTFE lining
Flange	Mat. No. 1.4404/AISI 316L	≤ DN 25 (1"): Hastelloy > DN 25 (1"): Hastelloy/Mat. No. 1.4404/AISI 316L	Mat. Nno. 1.4404/AISI 316L with PTFE lining
Float/flow tube	Mat. No. 1.4404/AISI 316L	Hastelloy	PTFE
Max. media temperature	-20 ... +200 °C (-4 ... +392 °F) (optional -80 ... +350 °C (-112 ... +662 °F))		-20 ... +125 °C (-4 ... +257 °F)
Nominal pressure	DN15 ... 50 (1/2" ... 2") PN 40 (580 psi) DN 65 ... 100 (2 1/2" ... 4") PN 16 (232 psi)	DN15 ... 50 (1/2" ... 2") PN 40 (580 psi) DN 65 ... 100 (2 1/2" ... 4") PN 16 (232 psi)	PN 16 (232 psi)
Reference data for measuring range specifications	Fluid in l/h with density: 1.0 kg/l, temperature 20 °C (68 °F), viscosity: 1 mPa.s Gas in m^3/h with density: 1.293 kg/m^3, temperature 0 °C (32 °F), viscosity: 0.0181 mPa·s, p_e = 0 bar (0 psi)		

Order code	Pressure loss [mbar]							Measuring ranges (dynamic 1:10)			
	Measurement cone							Liquids		Gases	
	1	2	3	4	5	6	7	[l/h]	[USgpm]	[m^3/h]	[scfm]
10	40 1)	-	-	-	-	-	-	0.5 ... 5	0.0022 ... 0.022	0.015 ... 0.15	0.0088 ... 0.088
11	44 1)	-	-	-	-	-	-	0 ... 10	0.0044 ... 0.044	0.03 ... 0.3	0.0177 ... 0.177
12	40 1)	-	-	-	-	-	-	1.6 ... 16	0.007 ... 0.07	0.045 ... 0.48	0.0265 ... 0.283
13	40 1)	-	-	-	-	-	-	2.5 ... 25	0.11 ... 0.11	0.075 ... 0.75	0.0441 ... 0.441
14	40 1)	-	-	-	-	-	-	4 ... 40	0.018 ... 0.18	0.13 ... 1.3	0.0765 ... 0.765
15	-	40 2)	-	-	-	-	-	5 ... 50	0.022 ... 0.22	0.15 ... 1.5	0.0883 ... 0.883
16	-	40 2)	-	-	-	-	-	7 ... 70	0.031 ... 0.31	0.2 ... 2.1	0.12 ... 1.24
17	-	60	-	-	-	-	-	10 ... 100	0.044 ... 044	0.3 ... 3	0.177 ... 1.77
20	-	60	-	-	-	-	-	16 ... 160	0.07 ... 0.7	0.5 ... 4.6	0.29 ... 2.71
21	-	60	-	-	-	-	-	25 ... 250	0.11 ... 1.1	0.07 ... 7	0.412 ... 4.12
22	-	70	-	-	-	-	-	40 ... 400	0.176 ... 1.76	1.0 ... 11	0.589 ... 6.47
23	-	80	-	-	-	-	-	60 ... 600	0.264 ... 2.64	1.7 ... 17	1 ... 10
24	-	-	60	-	-	-	-	100 ... 1 000	0.44 ... 4.4	2 ... 30	1.77 ... 17.66
25	-	-	70	-	-	-	-	160 ... 1 600	0.7 ... 7	3 ... 46	2.35 ... 27.07
26	-	-	100	50 2)	-	-	-	250 ... 2 500	1.1 ... 11	6 ... 70	4.12 ... 41.2
27	-	-	240 2)	120 2)	80	-	-	400 ... 4 000	1.76 ... 17.6	10 ... 110	6.47 ... 64.74
30	-	-	-	180 2)	90	-	-	600 ... 6 000	2.64 ... 26.4	16 ... 170	10 ... 100
31	-	-	-	-	110	-	-	1 000 ... 10 000	4.4 ... 44	28 ... 290	17.1 ... 170.7
32	-	-	-	-	230	70	-	1 600 ... 16 000	7 ... 70	45 ... 460	27.1 ... 270.7
33	-	-	-	-	230	70 2)	-	2 000 ... 20 000	8.8 ... 88	55 ... 550	32.4 ... 323.7
34	-	-	-	-	500 2)	100	-	2 500 ... 25 000	11 ... 110	69 ... 700	41.2 ... 412
35	-	-	-	-	-	350 2)	120	4 000 ... 40 000	17.6 ... 176	109 ... 1 100	64.7 ... 647.4
36	-	-	-	-	-	350 2)	120 2)	5 000 ... 50 000	22 ... 220	134 ... 1 350	79.5 ... 794.6
37	-	-	-	-	-	-	360 2)	6 000 ... 60 000	26.4 ... 264	169 ... 1 700	100 ...1 000
40	-	-	-	-	-	-	600 2)	8 000 ... 80 000	35.2 ... 352	239 ... 2 400	141.3 ... 1 413
41	-	-	-	-	-	-	600 2)	10 000 ... 100 000	44 ... 440	299 ... 3 000	176.6 ... 1 766

- Not available

1) Not available for EF-H and FF-P

2) Not available for FF-P

Note: Female thread connector (DIN ISO 228, NPT ANSI B 1.20.1) not available for FF-P.

© Siemens 2021

3

Technical specifications (continued)

Sensor size availability guide

Type CF-S and EF-H

Order code	Diameter		Flow tube						
	Flange		1	2	3	4	5	6	7
A	DN 15	½"	•[1]	•	•	-	-	-	-
B	DN 20	¾"	•[1]	•	•	-	-	-	-
C	DN 25	1"	•[1]	•	•	•[2]	-	-	-
D	DN 32	1¼"	•[1]	•	•	•	-	-	-
E	DN 40	1½"	•[1]	•	•	•	•[2]	-	-
F	DN 50	2"	•[1]	•	•	•	•	-	-
G	DN 65	2½"	-	-	•	•	•	•[2]	-
H	DN 80	3"	-	-	-	•	•	•	-
J	DN 100	4"	-	-	-	-	•	•	•

Type FF-P

Order code	Diameter		Flow tube						
	Flange		1	2	3	4	5	6	7
A	DN 15	½"	-	•[2]	-	-	-	-	-
B	DN 20	¾"	-	•[3]	-	-	-	-	-
C	DN 25	1"	-	•	•	-	-	-	-
D	DN 32	1¼"	-	-	-	-	-	-	-
E	DN 40	1½"	-	-	-	•	-	-	-
F	DN 50	2"	-	-	-	-	•	-	-
G	DN 65	2½"	-	-	-	-	-	-	-
H	DN 80	3"	-	-	-	-	-	•	-
J	DN 100	4"	-	-	-	-	-	-	•

Type CF-S and EF-H

Order code	Diameter		Flow tube						
	Female thread		1	2	3	4	5	6	7
Q	G ¼"	¼" NPT	•	•	-	-	-	-	-
R	G 3/8"	3/8" NPT	•	•	-	-	-	-	-
S	G ½"	½" NPT	•	•	•	•	-	-	-
T	G ¾"	¾" NPT	•	•	•	•	-	-	-
U	G 1"	1" NPT	•	•	•	•	•	-	-
V	G 1¼"	1¼" NPT	•	•	-	•	•	-	-
W	G 1½"	1½" NPT	-	-	-	•	•	-	-
X	G 2"	2" NPT	-	-	-	-	•	-	-

Note: Female thread not available for type FF-P.

• Available

- Not available

[1] Not available for type EF-H.

[2] Only with EN 1092-1 flange.

[3] Only with ANSI B16.5 flange.

© Siemens 2021

Technical specifications (continued)

Flange sealing surface selection guide

Order code	Diameter flange	Flow tube						
	EN 1092-1	**1**	**2**	**3**	**4**	**5**	**6**	**7**
A	DN 15	**N11**	**N11**	**N11**	-	-	-	-
B	DN 20	**N12**	**N12**	**N12**	-	-	-	-
C	DN 25	-	-	**N13**	**N13**	-	-	-
D	DN 32	-	-	-	**N14**	-	-	-
E	DN 40	-	-	-	**N15**	**N15**	-	-
F	DN 50	-	-	-	-	**N16**	-	-
G	DN 65	-	-	-	-	-	**N17**	-
H	DN 80	-	-	-	-	-	**N18**	-
J	DN 100	-	-	-	-	-	-	**N19**

Type FF-P

Order code	Diameter flange	Flow tube						
	ASME B16.5	**1**	**2**	**3**	**4**	**5**	**6**	**7**
A	½"	**N21**	**N21**	**N21**	-	-	-	-
B	¾"	**N22**	**N22**	**N22**	-	-	-	-
C	1"	-	-	**N23**	-	-	-	-
D	1¼"	-	-	-	**N24**	-	-	-
E	1½"	-	-	-	**N25**	-	-	-
F	2"	-	-	-	-	**N26**	-	-
G	2½"	-	-	-	-	**N27**	-	-
H	3"	-	-	-	-	-	**N28**	-
J	4"	-	-	-	-	-	-	**N29**

© Siemens 2021

3

Selection and ordering data

		Article No.
SITRANS FVA250 Full metal variable area meter ↗		**7ME586** ■ - ■ ■ ■ ■ ■ - ■ ■ ■ ■
↗Click on the Article No. for the online configuration in the PIA Life Cycle Portal.		
Flow tube		
Liquid	Gas	
5 ... 40 l/h	0.15 ... 1.3 m^3/h	**1**
50 ... 600 l/h	1.5 ... 17 m^3/h	**2**
1 000 ... 4 000 l/h	30 ... 110 m^3/h	**3**
2.5 ... 6 m^3/h	70 ... 170 m^3/h	**4**
4 ... 25 m^3/h	30 ... 700 m^3/h	**5**
16 ... 50 m^3/h	460 ... 1 350 m^3/h	**6**
60 ... 100 m^3/h	1 700 ... 3 000 m^3/h	**7**
Design		
Type: CF-S (standard)		**2**
Fitting: Stainless steel Flange: Stainless steel Float: Stainless steel		
Type: EF-H		**4**
Fitting: Stainless steel, Hastelloy Flange: Stainless steel, Hastelloy Float: Hastelloy		
Type: FF-P		**5**
Fitting: Stainless steel with PTFE lining Flange: Stainless steel with PTFE lining Float: PTFE		
Diameter		
DN 15/ANSI ½“		**A**
DN 20/ANSI ¾“		**B**
DN 25/ANSI 1“		**C**
DN 32/ANSI 1¼“		**D**
DN 40/ANSI 1½“		**E**
DN 50/ANSI 2“		**F**
DN 65/ANSI 2½“		**G**
DN 80/ANSI 3“		**H**
DN 100/ANSI 4“		**J**
Female thread ¼"		**Q**
Female thread 3/8"		**R**
Female thread ½"		**S**
Female thread ¾"		**T**
Female thread 1"		**U**
Female thread 1¼"		**V**
Female thread 1½"		**W**
Female thread 2"		**X**
Process connection		
EN 1092-1, PN 16, Form B1		**B**
EN 1092-1, PN 40, Form B1		**D**
EN 1092-1, PN 63, Form B2		**E**
EN 1092-1, PN 100, Form B2		**F**
ANSI B16.5, class 150 RF		**J**
ANSI B16.5, class 300 RF		**K**
ANSI B16.5, class 600 RF		**L**
ISO 228-1 G pipe thread PN 63		**T**
ISO 228-1 G pipe thread PN 100		**U**
ANSI B1.20.1 NPT pipe thread 900 lbs		**N**
ANSI B1.20.1 NPT pipe thread 1500 lbs		**P**

© Siemens 2021

Selection and ordering data

				Article No.																
SITRANS FVA250 Full metal variable area meter				**7ME586**	■	-	■	■	■	■	■	-	■	■	■	■			
Measuring ranges																				
Liquids		Gases																		
l/h	(USgpm)	m^3/h	(scfm)																	
0.5 ... 5	(0.0022 ... 0.022)	0.015 ... 0.15	(0.0088 ... 0.088)								**1**	**0**								
0 ... 10	(0.0044 ... 0.044)	0.03 ... 0.3	(0.0177 ... 0.177)								**1**	**1**								
1.6 ... 16	(0.007 ... 0.07)	0.045 ... 0.45	(0.0265 ... 0.283)								**1**	**2**								
2.5 ... 25	(0.011 ... 0.11)	0.075 ... 0.75	(0.0441 ... 0.441)								**1**	**3**								
4 ... 40	(0.018 ... 0.18)	0.13 ... 1.3	(0.0765 ... 0.765)								**1**	**4**								
5 ... 50	(0.022 ... 0.22)	0.15 ... 1.5	(0.0883 ... 0.883)								**1**	**5**								
7 ... 70	(0.031 ... 0.31)	0.2 ... 2	(0.12 ... 1.24)								**1**	**6**								
10 ... 100	(0.044 ... 0.44)	0.3 ... 3	(0.177 ... 1.77)								**1**	**7**								
16 ... 160	(0.07 ... 0.7)	0.5 ... 5	(0.29 ... 2.71)								**2**	**0**								
25 ... 250	(0.11 ... 1.1)	0.7 ... 7	(0.412 ... 4.12)								**2**	**1**								
40 ... 400	(0.176 ... 1.76)	1.0 ... 11	(0.589 ... 6.47)								**2**	**2**								
60 ... 600	(0.264 ... 2.64)	1.7 ... 17	(1 ... 10)								**2**	**3**								
100 ... 1 000	(0.44 ... 4.4)	2 ... 30	(1.77 ... 17.66)								**2**	**4**								
160 ... 1 600	(0.7 ... 7)	3 ... 46	(2.35 ... 27.07)								**2**	**5**								
250 ... 2 500	(1.1 ... 11)	6 ... 70	(4.12 ... 41.2)								**2**	**6**								
400 ... 4 000	(1.76 ... 17.6)	10 ... 110	(6.47 ... 64.74)								**2**	**7**								
600 ... 6 000	(2.64 ... 26.4)	16 ... 170	(10 ... 100)								**3**	**0**								
1 000 ... 10 000	(4.4 ... 44)	28 ... 290	(17.1 ... 170.7)								**3**	**1**								
1 600 ... 16 000	(7 ... 70)	45 ... 460	(27.1 ... 270.7)								**3**	**2**								
2 000 ... 20 000	(8.8 ... 88	55 ... 550	(32.4 ... 323.7)								**3**	**3**								
2 500 ... 25 000	(11 ... 110)	69 ... 700	(41.2 ... 412)								**3**	**4**								
4 000 ... 40 000	(17.6 ... 176)	109 ... 1 100	(64.7 ... 647.4)								**3**	**5**								
5 000 ... 50 000	(22 ... 220)	134 ... 1 350	(79.5 ... 794.6)								**3**	**6**								
6 000 ... 60 000	(26.4 ... 264)	169 ... 1 700	(100 ... 1 000)								**3**	**7**								
8 000 ... 80 000	(35.2 ... 352)	239 ... 2 400	(141.3 ... 1 413)								**4**	**0**								
10 000 ... 100 000	(44 ... ... 440)	299 ... 3 000	(176.6 ... 1 766)								**4**	**1**								
Display unit / process temperature																				
Standard (aluminum) - up to 200 °C with local display/150 °C with electrical output													**0**							
Standard (aluminum) with displaced display - up to 350 °C with local display and electrical outputs													**1**							
Stainless steel IP66 - up to 200 °C with local display/150 °C with electrical outputs													**2**							
Stainless steel IP66 with displaced display - up to 350 °C with local display and electrical outputs													**3**							
Heating/cooling jacket																				
Without (standard)														**A**						
With flange connection EN1092-1 DN 15 PN 40														**B**						
With flange connection ½ " ANSI B16.5 Class 150 RF														**C**						
Display/outputs																				
With display																**A**				
With display, 1 limit switch																**B**				
With display, 2 limit switches																**C**				
With display, HART and 4 to 20 mA																**D**				
With display, HART, 4 to 20 mA, 2 limit switches																**E**				
With display, HART, 4 to 20 mA, 1 limit switch																**F**				
With display, PROFIBUS PA																**G**				
Calibration																				
Standard calibration • Without calibration certificate • With calibration certificate																			**0** **1**	

© Siemens 2021

Selection and ordering data

	Order code
Other types of liquid and gas measurement	
Please add "**-Z**" to Article No. and specify Order code.	
Certificates	
Certificate of compliance EN 10204-2.1	**C10**
Factory inspection certificate EN 10204-2.2	**C11**
Material certificate according to EN 10204-3.1	**C12**
Dye penetration test on pressure bearing weldings	**C13**
X-ray test of pressure bearing weldings	**C14**
Pressure test with acceptance test certificate 3.1 according to EN 10204	**C15**
PMI (positive material identification) test of pressure bearing metal parts	**C16**
Float damping	
With float damping	**D01**
Flange sealing surface	
Sealing surface according to EN 1092-1 welding neck flange	
• DN 15	**N11**
• DN 20	**N12**
• DN 25	**N13**
• DN 32	**N14**
• DN 40	**N15**
• DN 50	**N16**
• DN 65	**N17**
• DN 80	**N18**
• DN 100	**N19**
Sealing surface according to ANSI B16.5 welding neck flange	
• ½ inch	**N21**
• ¾ inch	**N22**
• 1 inch	**N23**
• 1¼ inch	**N24**
• 1½ inch	**N25**
• 2 inch	**N26**
• 2½ inch	**N27**
• 3 inch	**N28**
• 4 inch	**N29**
Specification of medium process data (specify in plain text)	
Specification always required for each order: Medium Operating pressure Operating temperature Density (only for customer-specified medium) Viscosity (only for customer-specified medium) Measuring range	**Y01**
TAG plate	
TAG plate in stainless steel (add plain text)	**Y17**
Cleaning to company standard	
Cleaning Class 2, with identification free of oil and grease	**K46**
Cleaning Class 1, with identification free of oil, grease and silicon	**K48**
Approvals	
With ATEX approval	**M51**
Special version (specify in plain text)	**Y99**

Note:

For possible combinations of nominal sizes and flow tube, see table on page 3/403

Operating instructions

	Article No.
SITRANS FVA250	
• English	**A5E03821131**
• German	**A5E32108136**

All literature is available to download for free, in a range of languages, at
https://www.siemens.com/processinstrumentation/documentation

© Siemens 2021

Dimensional drawings

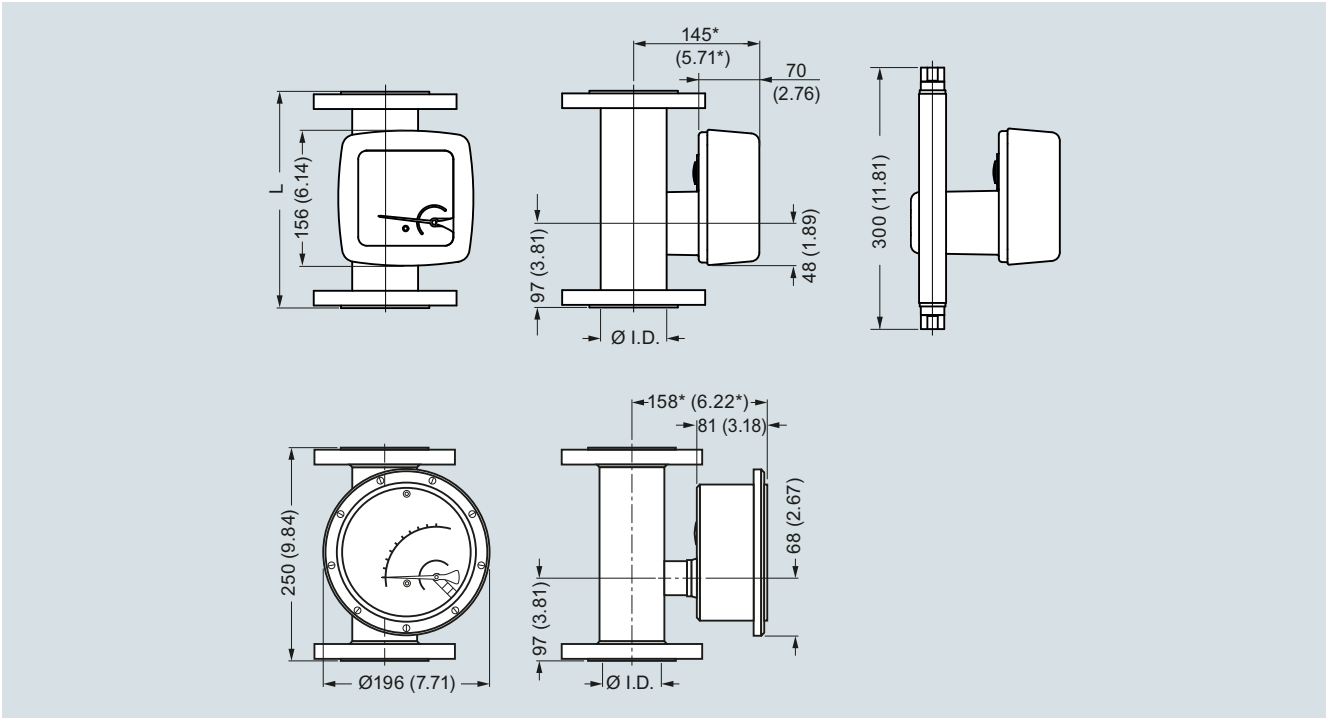

SITRANS FVA250, dimensions in mm

Order code	Diameter flange EN 1092-1	Flow tube I.D. [mm]						
		1	2	3	4	5	6	7
A	DN 15	26[1)]	26[1)]	32[1)]	-	-	-	-
B	DN 20	26[1)]	26[1)]	32[1)]	-	-	-	-
C	DN 25	26	26	32[1)]	46[1)]	-	-	-
D	DN 32	26	26	32	46[1)]	-	-	-
E	DN 40	26	26	32	46[1)]	70[1)]	-	-
F	DN 50	26	26	32	46	70[1)]	-	-
G	DN 65	-	-	32	46	70	102[1)]	-
H	DN 80	-	-	-	46	70	102[1)]	-
J	DN 100	-	-	-	-	70	102	125[1)]

*) +100 mm with pulled-out display unit

[1)] Flange sealing surface not according to EN 1092-1 (Please select N-option for EN 1092-1 compliant flange sealing surface)

Order code	Diameter flange ANSI 1092-1	Flow tube I.D. [mm]						
		1	2	3	4	5	6	7
A	½“	1.02[1)]	1.02[1)]	1.26[1)2)]	-	-	-	-
B	¾“	1.02[1)]	1.02[1)]	1.26[1)]	-	-	-	-
C	1“	1.02	1.02	1.26[1)]	-	-	-	-
D	1¼“	1.02	1.02	1.26	1.81[1)]	-	-	-
E	1½“	1.02	1.02	1.26	1.81[1)]	-	-	-
F	2“	1.02	1.02	1.26	1.81	2.76[1)]	-	-
G	2½“	-	-	1.26	1.81	2.76	-	-
H	3“	-	-	-	1.81	2.76	4.02[1)]	-
J	4“	-	-	-	-	2.76	4.02	4.92[1)]

*) +3.94 inch with pulled-out display unit

[1)] Flange sealing surface not according to ANSI B16.5 (Please select N-option for ANSI B16.5 compliant flange sealing surface)

[2)] Flange with threaded holes

© Siemens 2021

3

Dimensional drawings (continued)

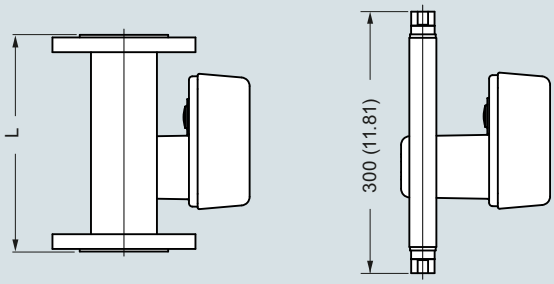

SITRANS FVA250 build-in lenght, dimensions in mm (inch)

Diameter	EN 1092-1				Diameter	ANSI B16.5		
	PN 16	PN 16	PN 16	PN 16		class 150	class 300	class 600
DN 15	-	250 (9.84)	-	250 (9.84)	½"	250 (9.84)	250 (9.84)	250 (9.84)
DN 20	-	250 (9.84)	-	250 (9.84)	¾"	250 (9.84)	250 (9.84)	250 (9.84)
DN 25	-	250 (9.84)	-	250 (9.84)	1"	250 (9.84)	250 (9.84)	250 (9.84)
DN 32	-	250 (9.84)	-	250 (9.84)	1¼"	250 (9.84)	250 (9.84)	250 (9.84)
DN 40	-	250 (9.84)	-	250 (9.84)	1½"	250 (9.84)	250 (9.84)	250 (9.84)
DN 50	-	250 (9.84)	250 (9.84)	300 (11.81)	2"	250 (9.84)	250 (9.84)	300 (11.81)
DN 65	250 (9.84)	250 (9.84)	-	-	2½"	250 (9.84)	300 (11.81)	300 (11.81)
DN 80	250 (9.84)	250 (9.84)	-	-	3"	250 (9.84)	300 (11.81)	300 (11.81)
DN 100	250 (9.84)	250 (9.84)	-	-	4"	250 (9.84)	300 (11.81)	300 (11.81)

- not available

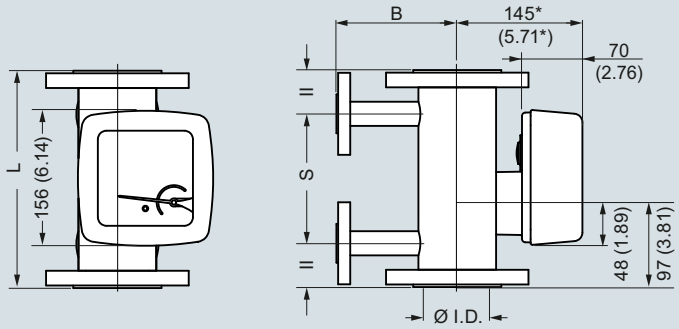

SITRANS FVA250 with heating/cooling jacket, dimensions, in mm (inch)

Diameter		B (flange)		B (Ermeto)		S		Weight	
		mm	inch	mm	inch	mm	inch	kg	lbs
15	½“	110	4.33	53	2.09	150	5.91	3,0	6.6
20	¾“	110	4.33	53	2.09	150	5.91	3,0	6.6
25	1“	110	4.33	58,5	2.3	150	5.91	4,2	9.3
32	1¼“	110	4.33	58,5	2.3	150	5.91	5,2	11.5
40	1½“	130	5.12	63	2.48	150	5.91	6,0	13.2
50	2“	140	5.51	77,5	3.05	150	5.91	7,5	16.5
65	2½“	140	5.51	77,5	3.05	150	5.91	8,5	18.7
80	3“	160	6.3	93,5	3.68	150	5.91	13	28.7
100	4“	175	6.89	110	4.33	120	4.72	18	39.7

* + 100 mm (3.94 inch) with pulled-out display unit

© Siemens 2021

Overview

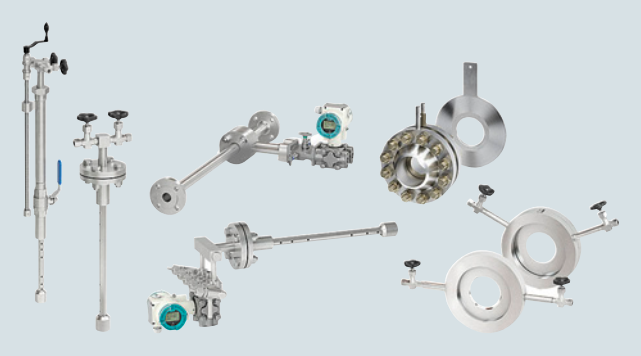

With the SITRANS FP product line Siemens offers a complete solution for differential pressure flow measurements. This well-established technology is suitable for all kinds of applications – liquids, dry or wet gases and steam. Due to the robust though variable design it has been and still is one of the main technologies for flow measurement in various industries.

The new product line offers full flexibility for your processes. SITRANS FP is not a simple substitution of our previous orifice program but a completely new setup. A new digital sizing process ensures minimum effort during presales and full traceability in aftersales. The differential pressure portfolio consists of the averaging pitot tube measuring system SITRANS FPS300 and the differential pressure sensors according to ISO 5167 (orifices) SITRANS FPS200.

© Siemens 2021

3

Overview (continued)

Product overview

SITRANS FP230/FPS200 primary elements according to ISO 5167

	Product name	Fluid	Design	Pressure tapping	Nominal size	Article No.	Catalog page
	**Orifice plate with pressure tappings** Compact orifice plate with integrated pressure tappings in carbon or stainless steel	• Gas • Steam • Liquid	• Remote • Compact	Corner tapping	DN 50 ... 500 (2 ...20 inch)	**7ME171.-.....-....**	**3/413**
	**Orifice plate with annular chamber** Orifice plate with annular chamber pressure tapping in carbon or stainless steel	• Gas • Steam • Liquid	• Remote • Compact	Annular chamber	DN 50 ... 600 (2 ...24 inch)	**7ME172.-.....-....**	**3/421**
	**Orifice meter run** Orifice meter run with flanges ends in carbon or stainless steel	• Gas • Steam • Liquid	• Remote • Compact	Annular chamber	DN 10 ... 50 (3/8 ...2 inch)	**7ME173.-.....-....**	**3/428**
	**Orifice plate** Orifice plate for installation between flanges in stainless steel	• Gas • Steam • Liquid	• Remote	Not included	DN 50 ... 600 (2 ...24 inch)	**7ME174.-.....-....**	**3/434**
	**Orifice plate with orifice flange** Orifice flange pair according to ASME B36.16 with orifice plate in carbon steel (flanges) or stainless steel	• Gas • Liquid	• Remote	In the flange	DN 50 ... 600 (2 ...24 inch)	**7ME175.-.....-....**	**3/437**

SITRANS FP330/FPS300 averaging pitot tube

	Product name	Fuid	Design	Mounting type	Nominal size	Article No.	Catalog page
	**Averaging pitot tube for gas and liquids**	• Gas • Liquid	• Remote • Compact	Flange, cutting ring	DN 40 ... 4000	**7ME161.-.....-....**	**3/443**
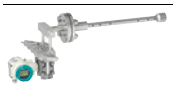	**Averaging pitot tube for steam**	• Superheated steam • Saturated steam	• Remote • Compact	Flange	DN 40 ... 2000	**7ME162.-.....-....**	**3/450**
	**Averaging pitot tube with FASTLOK** The sensor can be assembled and disassembled into the pipe without interrupting plant operation.	• Dry gas • Wet gas • Liquid	• Remote • Compact	Screwed ball valve	DN 40 ... 2000	**7ME163.-.....-....**	**3/455**

© Siemens 2021

Overview (continued)

Sizing procedure

The SITRANS FP sizing tool is available via PIA Life Cycle Portal and supports you in choosing the right device within this portfolio:

https://www.pia-portal.automation.siemens.com

After registration you have access to a web-based sizing procedure generating reference IDs which can be used as application data for the ordering process.

Benefits

- Suitable for a vast range of different applications
- Available as pre-mounted compact system as well as remote parts
- Advanced intelligent sizing procedure
- Web-based sizing and data storage enables full traceability and easy communication
- All benefits of SITRANS P320 available

Application

The SITRANS FP230/330 devices are applicable in a variety of applications:

Chemical industry

- Different materials for aggressive substances
- Namur NE107, self-monitoring and diagnostics
- Namur NE21, increase EMC conformity
- Measurement of various liquid and gas media

Oil & Gas

- Complete setup made of stainless steel
- Robust design and well-established technology
- Measurement of liquid and gas hydrocarbons

Power

- QAL1 approval for continuous emission monitoring applications according to EN 15267
- Specific design for steam applications
- Measurement of steam, condensate and water

and others

- Cost-effective device
- Easy commissioning

Function

Mode of operation

The so-called primary element (orifice plate, averaging pitot tube, etc.) creates a differential pressure. The pressure is transferred to the measuring cell of the differential pressure transmitter. This can be done through a compact installation where the differential pressure transmitter is installed directly at the primary element or as remote installation through separately installed pipes that connect primary element and differential pressure transmitter.

Different types and designs of primary elements for differential pressure flow measurement have been established historically. Traditional primary elements such as orifice meters are harmonized in the international standard ISO 5167. Other primary elements such as the averaging pitot tube follow the same working principle, they are not standardized but are widely used and accepted.

Principle of the differential pressure method

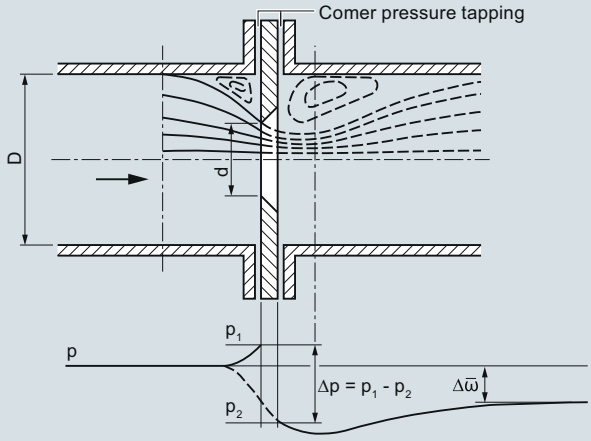

D Internal diameter of pipe
d Diameter of orifice disk aperture
p Pressure in the pipe
p_1 Pressure immediately upstream of primary device
p_2 Pressure immediately downstream of primary device
Δp Differential pressure
$\Delta\bar{\omega}$ Remaining pressure loss

Principle of the differential pressure method: Pressure curve at orifice plate

The differential pressure method is based on the law of continuity and Bernoulli's energy equation. A primary differential pressure device is installed at the measuring point to measure the flow. The primary element restricts the pipe.

According to the law of continuity, the mass flow of a moving fluid (gas, steam or liquid) in a pipeline is the same at all points. If the cross-section is reduced at one point, the flow velocity must increase at this point. Thus, the restriction causes an overpressure directly in front of the primary element and a drop in pressure behind the primary element. This pressure drop is greatly influenced by the degree of restriction. This degree is usually measured in relation of the diameters of the restriction to the diameter of the pipe, the diameter ratio β:

$$\beta = \frac{d}{D}$$

© Siemens 2021

3

Function (continued)

The difference between overpressure before the primary element and lower pressure after the primary element is called differential pressure (Δp, "delta p"). According to Bernoulli's energy equation, the square-root of the differential pressure is proportional to the flow rate:

$q \sim \sqrt{\Delta p}$

The created differential pressure is partly recovered with sufficient distance to the primary element but a permanent pressure drop, $\Delta\omega$, remains.

The exact flow equation of ISO 5167 additionally considers the properties of the primary device, the pipe, and the fluid:

$q = f(C, \Delta p, \rho, \varepsilon, \beta)$

Where:

- q: mass flow
- Δp: differential pressure
- C: "coefficient of discharge"
- ρ: density of fluid before the point of measurement
- ε: expansion number
- β: diameter ratio

The C-factor is determined during design of the differential pressure flow meter. For certain types of flow meters it is a constant (e.g. Venturi flow meters), for others it is slightly non-linear and dependent on flow rate (orifice flow meters).

The expansion number considers the change in fluid properties due to the differential pressure itself.

All factors will be considered during the design of the differential pressure flow meter.

For flow measurement applications where all quantities (density, pressure, temperature, etc.) can – with sufficient accuracy – be considered constant, it can be reduced to the basic relation given above:

$q \sim \sqrt{\Delta p}$

Differential pressure flow measurement in practice

A differential pressure flow measurement usually consists of at least 3 components:

- primary element (orifice, pitot tube, etc.)
- manifold (plus primary shut-off valve for remote installations)
- differential pressure transmitter

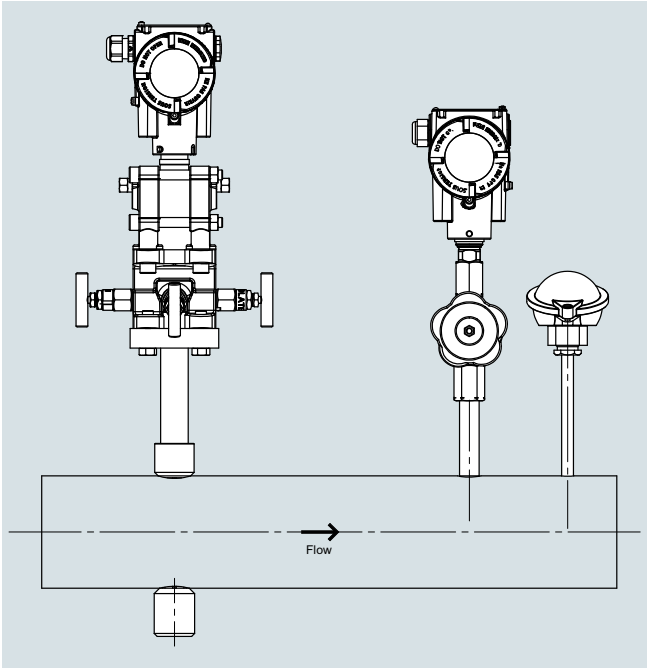

The picture above shows all these components installed together in a "compact" arrangement (manifold and differential pressure transmitter sitting on top of the primary element).

Depending on the process the application might require additional components such as:

- absolute pressure measurement
- temperature measurement

which are also shown above. If absolute pressure and/or temperature are not constant, these quantities have to be measured as well to calculate the density changes caused by the change of these process conditions. This process is called "compensation" meaning re-calculation of actual fluid density based on actual process conditions as explained above.

© Siemens 2021

Characteristic curves

Based on the relations described above differential pressure measurement systems generally show a square-root relationship between differential pressure and flow. Therefore, a square-root transmitter is required to create a linear flow characteristic. If no square-root characteristic is selected, the transmitter will output a signal proportional to differential pressure.

The conversion from differential pressure to flow has to be done in a subsequent system (flow computer, DCS, etc.). This is required if additional measurements such as absolute pressure and/or temperature are connected to such a system to correct for changes in operational density (so called “compensation”).

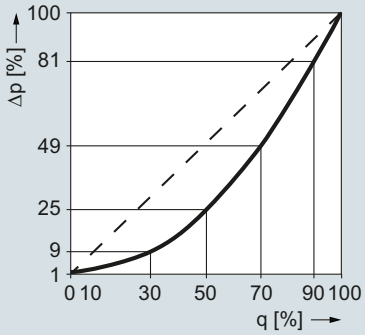

q	0	1	3	5	8	10	15	20	30	40	50	60	70	80	90	100 %
Δp	0	0,01	0,09	0,25	0,64	1	2,25	4	9	16	25	36	49	64	81	100 %

Setting range for application point of square-rooted characteristic for SITRANS P differential pressure transmitter

Relationship between flow q and differential pressure Δp

© Siemens 2021

SITRANS FP230/FPS200 primary elements according to ISO 5167

Overview

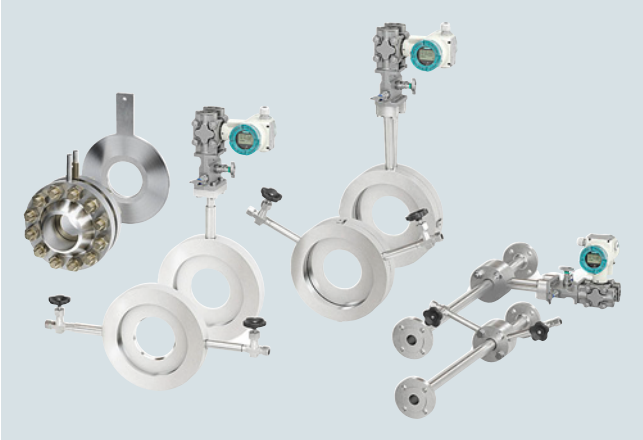

Primary differential pressure devices are standardized mechanical flow sensors, often also referred to as differential pressure transducers. The primary differential pressure devices are calculated and manufactured according to DIN EN ISO 5167.

Through constriction of the line diameter in the pressure device, the flow rate creates a differential pressure that is converted with the help of a differential pressure transmitter into a proportional current signal or flow value. The assignment of differential pressure to flow is created by a calculation of the primary differential pressure device.

Primary differential pressure devices are suitable for single-phase media such as gas, vapor and liquids without solid components.

Benefits

- Suitable for universal use across the globe and widely accepted in all industries
- Very robust and can be used in a wide range of nominal sizes
- Suitable for high temperature and pressure ranges
- Low uncertainty of measurement
- No wet calibration required as they use an internationally standardized flow rate measurement procedure
- Differential pressure transmitter can be used over a long distance from the measuring location
- Differential pressure method is well known and has a large installed base
- SITRANS P differential pressure transmitter is easy to parameterize again if process data change. They are adapted by recalculating and assigning new parameters to the transmitter or, in case of an orifice plate with annular chamber, by using a new orifice disk.

Application

- Technical Gases
- Compressed Air
- Fresh and Combustion Air
- Steam/Heat Quantities
- Heat Transfer Fluids
- Water

Design

Basics: Orifices for flow measurement

Orifice plates are usually differentiated by their type of installation, type of differential pressure tapping and the shape of the orifice.

The characteristic differential pressure is created by the orifice bore which is the defined circular opening. It is usually of square edged concentric type according to ISO 5167-2 positioned in the middle of the pipe.

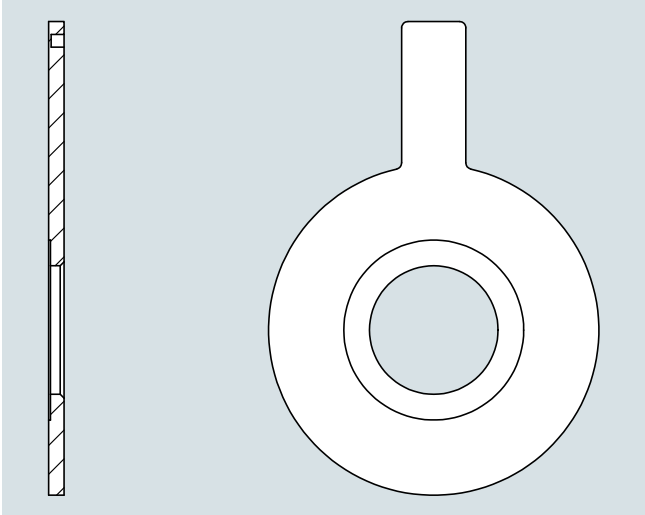

The main features are a sharp edge, a cylindrical bore of a certain length and a conical bevel tapering to the rear. Alternatively, the relevant standards provide for deviating designs, which are used for applications with highly viscous (e.g. quarter-circle nozzles) or contaminated media (e.g. segment orifices).

The standard design is permitted by the standard for an inner diameter of the pipe between 50 mm and 1000 mm. For pipes with smaller inside diameters, standards such as ISO 15377-TR or ASME MFC-14M which go beyond these standards must be taken into account. Orifice plates for pipes with small inside diameters are usually designed as meter tubes.

In order to reduce the uncertainties of these meter tubes, the devices can be calibrated on a flow test bench if required on request.

© Siemens 2021

Design (continued)

Types of differential pressure tappings

The differential pressure can be tapped in different ways:

Corner tapping

Directly in front of and behind the orifice plate an opening is placed in the corner of a carrier ring to measure upstream and downstream pressure. Both pressure signals are routed through these openings to the outside.

Corner tapping with annular chamber

The orifice plated is held by an annular chamber. Upstream and downstream pressure are measured through an annular gap opening between carrier ring and orifice plate. Both pressure signals are averaged over the entire circumference and routed outside.

Flange tapping

The orifice plate is held between two so-called orifice flanges. Upstream and downstream pressure signals are measured through flange taps which are drilled into the flanges.

Tapping with distance D, D/2

The orifice plate is held between regular flanges. Upstream and downstream pressure signals are measured through taps in the pipe with distance of D (upstream) and D/2 (downstream) to the orifice plate.

Designs

- Orifice plate with pressure tappings (7ME171)
- Orifice plate with annular chamber (7ME172)
- Orifice meter run (7ME173)
- Orifice plate (7ME174)
- Orifice plate with orifice flange (7ME175)

Mounting arrangements

For more information on installation position and piping, please see the Operating Instructions "SITRANS FPS200" on SIOS.

Integration

The orifice plate is installed between two flanges in the pipeline. Using condensation pots (for steam) and initial shut-off valves, the differential pressure of the high-pressure side and low-pressure side is directed through differential pressure lines to a manifold and to the differential pressure transmitter. For fluids with pressure and temperature fluctuations it makes sense to take an additional measurement of the pressure and temperature in order to correct the flow signal of the transmitter in a subsequent correction computer.

Selection of mounting point

The flow measuring regulations DIN EN ISO 5167 not only consider the design of primary differential pressure devices, but also assume that their installation is in accordance with the standard so that the specified tolerances can be retained. The required inlet and outlet pipe sections according to ISO 5167 can be found in the calculation protocol of the respective orifice plate. Configuration of the pipeline should allow for standardized installation (required inlet and outlet pipe section). Particular attention must be paid to ensure that the primary device can be fitted in a sufficiently long straight section of pipe. Bends, valves and similar should be fitted sufficiently far upstream of the primary device to prevent them having a detrimental effect. Primary devices with a large diameter ratio are particularly sensitive to interferences.

Design of measuring point

The design of the measuring point depends on the medium and on the spatial conditions. The designs for gas and water only differ with regard to the position of the tapping sockets (see section "Tapping sockets"); condensation pots are provided for steam applications.

Orifice meter runs

On lines with small nominal sizes (DN 10 to DN 50) the measurements are influenced by the wall roughness and diameter tolerances of the pipes, more than measurements with larger nominal sizes. These influences are counteracted by using orifice meter runs with fitted inlet and outlet pipe sections made of precision pipes. For exact measurements with orifice meter runs, the flow coefficient C can be determined by means of calibration.

© Siemens 2021

Technical specifications

General design	
Working principle	Differential pressure orifice meter (other ISO 5167 primary elements on request)
Media	• Steam (saturated, superheated) • Gas (dry, up to 100% water saturated) • Liquids (water, non-conductive liquids, oil, etc.)
Transmitter installation	• Compact mount with differential pressure transmitter (acc. to IEC 61518) • Remote mounted differential pressure transmitter
Bidirectional flow	On request
Design	According to ISO 5167-2 (2003); for orifice plates smaller than 50 mm inner diameter according to ISO/TR 15377 or ASME MFC-14M:2003
Accuracy	
Uncertainty at design flow (of Sensor Coefficient of Discharge)	Typically in the range of 0.5 ... 1.2% (depends on application and final design)
Measurement range	Typically between up to 1:5 ... 1:10 (real measurement range depends on transmitter performance and non-linearity of coefficient of discharge)
Operating conditions	
Pressure	Max. PN 100 or Class 600 (higher pressure ratings on request)
Temperature	According to EN 1092-1 or ASME B16.5 (exact maximum temperature depends on sensor design)
Pressure loss	30 ... 80% of differential pressure
Installation conditions	
Straight inlet diameter	Will be calculated by sizing tool (depends on β-coefficient, typically in the range of 16 ... 44 × inner diameter behind 90° elbow, can be reduced with 0.5% added uncertainty)
Straight outlet diameter	Will be calculated by sizing tool (depends on β-coefficient, typically in the range of 6 ... 8 × inner diameter, can be reduced with 0.5% added uncertainty) Note: For detailed calculation of recommended installation pipe length please refer to sizing tool or manual

Design	
Material orifice plate	Standard: • Stainless steel 1.4404/AISI 316L • Carbon steel (other materials on request)
Material orifice flanges / orifice holder	• Stainless steel 1.4404/AISI 316L • Carbon steel (other materials on request)
Pipe diameter	• DIN: DN 10 ... DN 600 • ASME: 3/8" ... 24" (other sizes on request)
Process connection	Orifice meter runs: Flanges EN 1092-1 B1 or ASME B16.5 RF All other designs: Suitable for installation between flanges EN 1092-1 B1 or ASME B16.5 RF (other process connections on request)
Length	Orifice with carrier ring and pressure tappings: 40 mm (65 mm for compact steam applications) Orifice plate with annular chamber: 65 mm Orifice meter run: depends on pipe diameter (see below) Single piece orifice for orifice flanges (with or without orifice flanges): depends on pipe diameter (see below)
Approvals	
• Hazardous area	(see differential pressure transmitter)
• Enclosure rating	(see differential pressure transmitter)
• Operational safety	(see differential pressure transmitter)

Options

Further versions that are available on request:

- Other types of primary differential pressure device: nozzles, venturi nozzles, classic venturi tubes etc.
- Other nominal sizes and nominal pressures to EN, ASME and other standards
- Other lengths, special lengths
- Other materials
- Sealing face with recess or groove
- Flushing rings
- Other tapping sockets, multiple tappings
- Material acceptance test certificates or cold water pressure tests

More information

For more information please see the Installation Instructions and the Instruction Manuals SITRANS P on SIOS.

© Siemens 2021

Application



SITRANS FP230 compact design

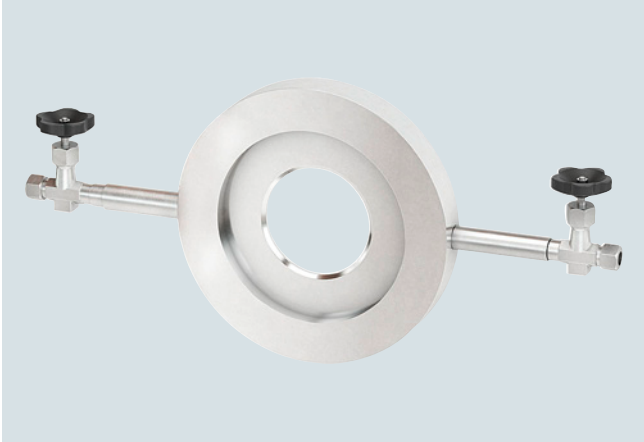

SITRANS FPS200 remote design

Compact orifice plate with integrated pressure tappings in carbon or stainless steel for flow measurement of gas, steam and liquid.

© Siemens 2021

Orifice plate with pressure tappings

Design

Orifice plates with integral tappings are manufactured from a single body and are therefore particularly inexpensive. The pressure tapping takes place at two points and is integrated into the carrier ring. Differential pressure connection can be compact and remote. The instruments are easy to handle and offer good accuracy with reasonable inlet and outlet runs. They are installed between regular flanges.

Nominal size
- EN: DN 50 ... 500
- ASME: 2 ... 20 inch

Nominal pressure
- EN: PN 6 ... 100
- ASME: class 150 ... 600

Connection length

Differential pressure tapping
- Corner tapping: Measurement of differential pressure at 2 points in the corner of the carrier ring

Sealing face
- According to EN 1092-1: flat (for flanges form B1 and B2)
- According to ASME B16.5: flat (for flanges RF and SF)

Overall length
- 40 mm (65 mm for compact steam applications)

Material
- Orifice: Carbon steel / orifice edge: 316L/1.4404
- Orifice: 316L/1.4404 / orifice edge: 316L/1.4404

Compact mount for gas and liquids

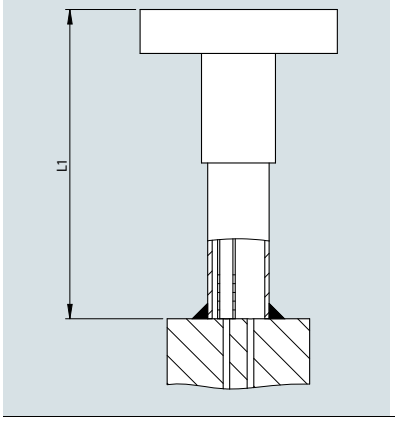

- L1 = 130 mm
- Max. isolation = 110 mm

Compact mount for steam

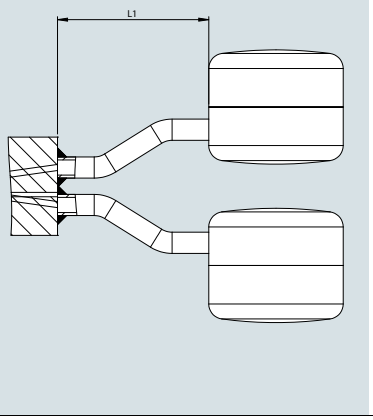

- L1 = 150 mm
- Max. isolation = 110 mm

Remote mount for gas and liquids

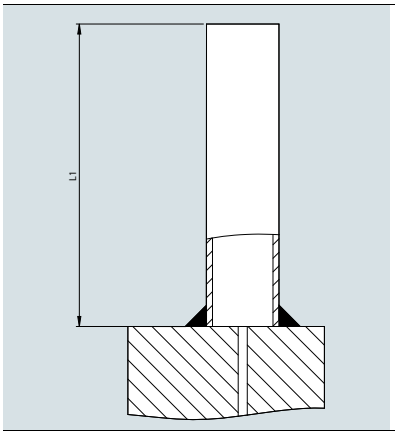

- L1 = 100 mm
- Max. isolation = 80 mm

Remote mount for steam

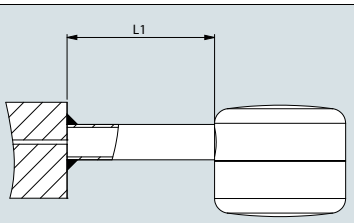

- L1 = 150 mm
- Max. isolation = 140 mm

© Siemens 2021

Design (continued)

Tapping sockets

Gases and liquids

Remote design

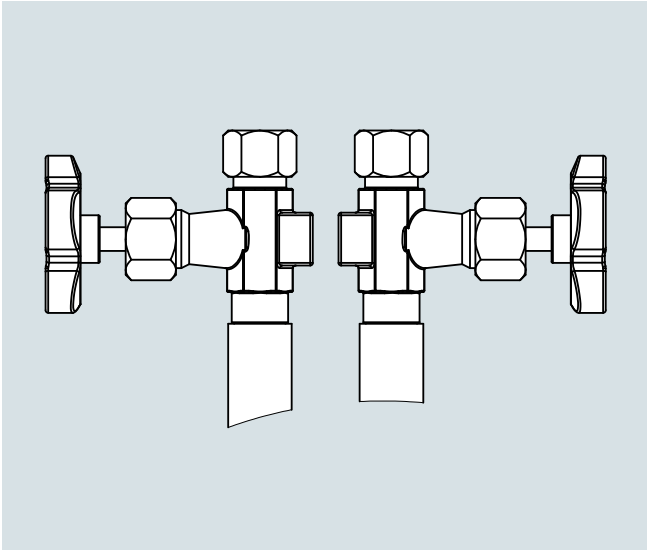

For single body orifice plates in remote design, the angle α between the pressure tap depends on the pressure rating and the nominal size of the flanges.

Compact design

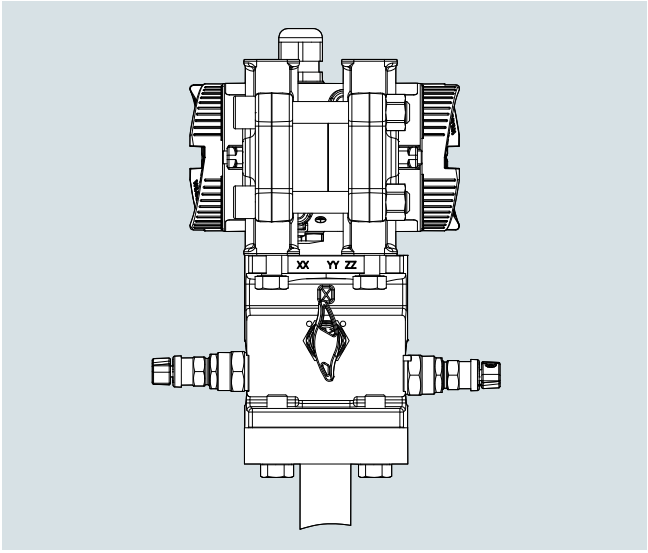

For single body orifice plates in compact design, a so-called flange plate is used. The manifold and the differential pressure transmitter are mounted on this flange plate.

Tap position/angle in horizontal pipe:

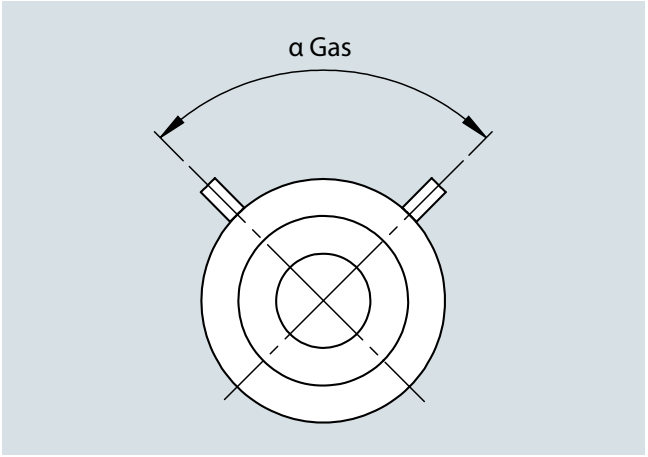

Tap position/angle in horizontal pipe (gas)

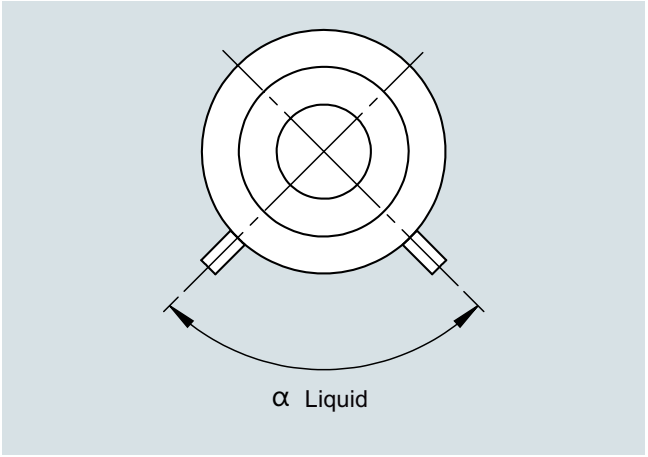

Tap position/angle in horizontal pipe (liquid)

© Siemens 2021

Orifice plate with pressure tappings

Design (continued)

Remote design for gases and liquids for DIN flange

	DIN flange						
Nominal size	**PN 6**	**PN 10**	**PN 16**	**PN 25**	**PN 40**	**PN 64**	**PN 100**
DN 50	135	135	135	135	135	135	135
DN 65	135	135	135*)	90	90	90	90
DN 80	135	90	90	90	90	90	90
DN 100	135	90	90	90	90	90	90
DN 125	90	90	90	90	90	90	90
DN 150	90	90	90	90	90	90	60
DN 175	90	90	90	60	60	60	60
DN 200	90	90	60	60	60	60	60
DN 250	60	60	60	60	60	60	60
DN 300	60	60	60	45	45	45	45
DN 350	60	45	45	45	45	45	45
DN 400	45	45	45	45	45	45	45
DN 450	45	36	36	36	-	-	-
DN 500	36	36	36	36	36	36	36

Remote design for gases and liquids for ANSI flange

	ANSI flange		
Nominal size	**Class 150**	**Class 300**	**Class 600**
2"	135	90	90
2,5"	135	90	90
3"	135	90	90
4"	90	90	90
5"	90	90	90
6"	90	60	60
8"	90	60	60
10"	60	45	45
12"	60	45	36
14"	60	36	36
16"	45	36	36
18"	45	30	36
20"	36	30	30

*) Fitting for DN 65 PN 16 flange with 4 holes. If design for flange with 8 holes is required, please add a comment to the corresponding project within the sizing tool.

© Siemens 2021

Design (continued)

Wet gases

Remote design

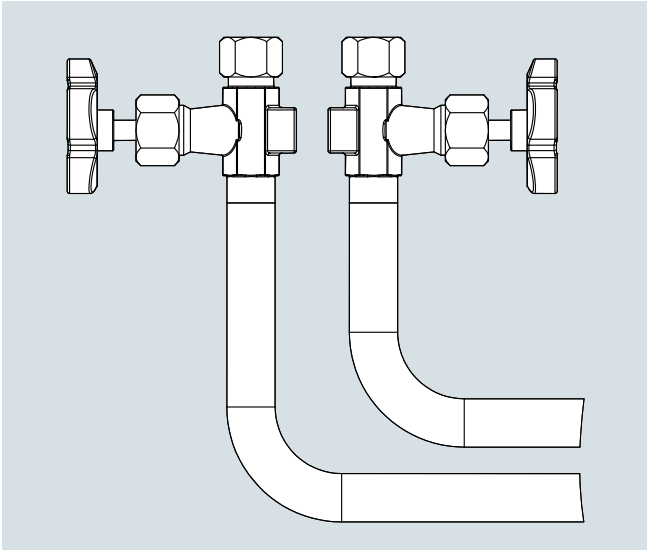

For single body orifice plates in remote design for wet gases, nozzles bent at right angles with welded-on valves are used. This design is only necessary for vertical pipes. For horizontal pipes, the design for gases and liquids can be selected because the nozzles point up as listed in the table above.

Compact design

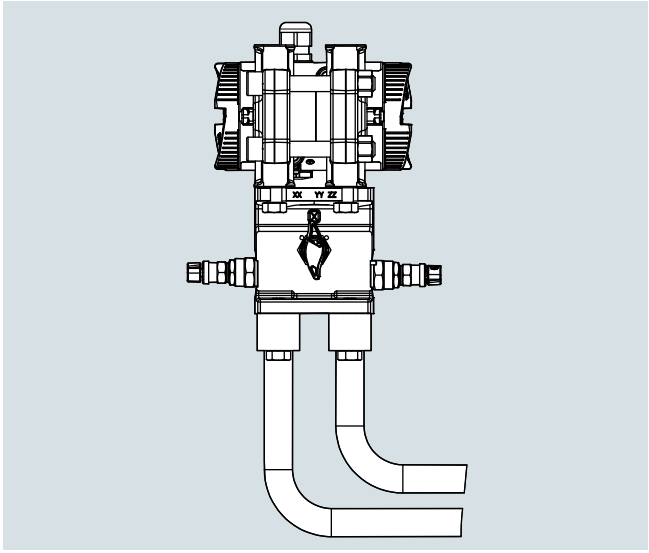

For single body orifice plates in compact design for wet gases, nozzles bent at right angles with oval flanges are used. The manifold and the differential pressure transmitter are mounted on these oval flanges. This design is only necessary for vertical pipes. For horizontal pipes, the design for gases and liquids can be selected because the flange plate with manifold and transmitter always points up.

Steam

Remote design

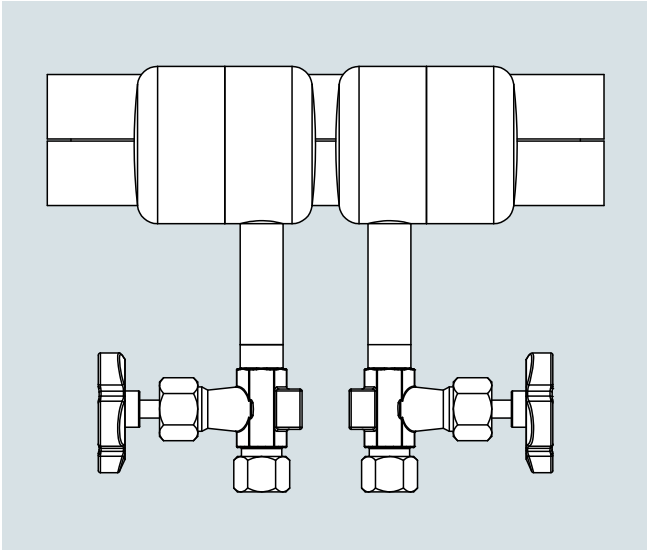

For single body orifice plates in remote design for steam, the condensate vessels with shut-off valves are welded at an angle of 180°.

Compact design

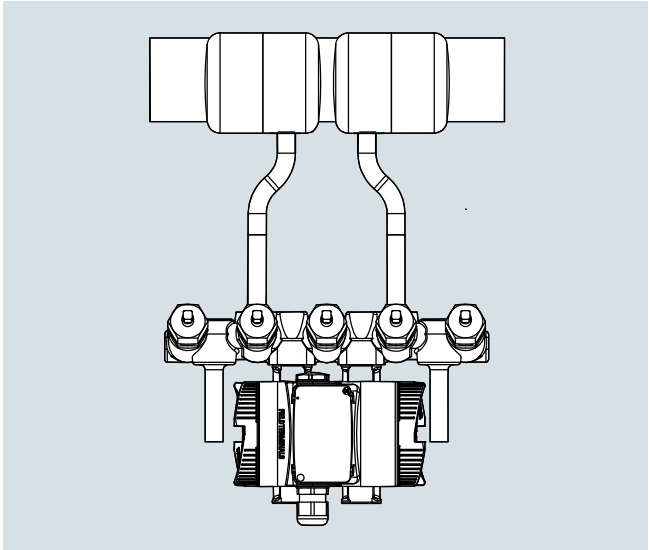

For single body orifice plates in compact design for steam, the condensate vessels and the manifold are welded-on one side. The orifice has a width of 65 mm in this case (deviating from the standard).

© Siemens 2021

Orifice plate with pressure tappings

Selection and ordering data

	Article No.												
SITRANS FP230/FPS200 orifice plate with pressure tappings ↗	**7ME171**	■	-	■	■	■	■	0	-	■	■	■	■
↗ Click on the Article No. for the online configuration in the PIA Life Cycle Portal.													
Communication													
HART (4 ... 20 mA)		0											
Without transmitter		8											
Nominal size													
DN 50 (2“)				1	D								
DN 65 (2½“)				1	E								
DN 80 (3“)				1	F								
DN 100 (4“)				2	G								
DN 125 (5“)				2	H								
DN 150 (6“)				2	J								
DN 200 (8“)				2	K								
DN 250 (10“)				2	L								
DN 300 (12“)				2	M								
DN 350 (14“)				2	N								
DN 400 (16“)				2	P								
DN 450 (18“)				2	Q								
DN 500 (20“)				2	R								
Nominal pressure													
Flange EN 1092-1 Form B1 PN 6						A							
Flange EN 1092-1 Form B1 PN 10						B							
Flange EN 1092-1 Form B1 PN 16						C							
Flange EN 1092-1 Form B1 PN 25						D							
Flange EN 1092-1 Form B1 PN 40						E							
Flange EN 1092-1 Form B1 PN 64						F							
Flange EN 1092-1 Form B1 PN 100						G							
Flange ASME B16.5 Class 150						Q							
Flange ASME B16.5 Class 300						R							
Flange ASME B16.5 Class 600						S							
Wetted parts material													
Orifice: Carbon steel / orifice edge: 316L/1.4404							0						
Orifice: 316L/1.4404 / orifice edge: 316L/1.4404							1						
System design													
Compact design for dry gases (horizontal and vertical pipes)									0				
Compact design for liquids									1				
Compact design for wet gases (only vertical pipes)									2				
Compact design for steam									3				
Remote design for dry gases									4				
Remote design for liquids									5				
Remote design for wet gases									6				
Remote design for steam									7				
Type of protection of pressure transmitter													
No Ex / without pressure tranmitter										A			
Intrinsic safety										B			
Explosion proof										C			
Intrinsic safety, Explosion proof										D			
Dust ignition proof zone 21/22 (DIP), increased safety zone 2										L			
Dust ignition proof zone 20/21/22 (DIP), increased safety zone 2										M			
Intrinsic safety, Explosion proof, Dust ignition proof zone 21/22 (DIP), increased safety zone 2										S			
Intrinsic safety, Explosion proof, Dust ignition proof zone 21/22 (DIP), increased safety zone 2, class division										T			
Electrical connections/cable entries of pressure transmitter													
Without pressure transmitter											A		
2 x M20 x 1.5											F		
2 x 1/2-14 NPT											M		
Local operation/display of pressure transmitter													
Without display (closed lid) / without pressure tranmitter													0
With display (closed lid)													1
With display (lid with glass window)													2

© Siemens 2021

Selection and ordering data	Order code
*Further designs**	
Please add "**-Z**" to Article No. and specify Order code(s) and plain text.	
Certificates of primary element incl. manifolds	
Inspection certificate of the primary element (EN 10204-3.1) - material of pressure-containing and wetted parts	**C52**
Factory certificate of the primary element (EN 10204-2.2) - wetted parts (MR 0175-2015)	**C54**
Dimensional record of the primary element	**C55**
Inspection certificate (DIN EN 571-1) - dye penetration test of weldings	**C56**
Hydrostatic pressure test of the primary element (EN 13480-5) of weldings	**C58**
Dimensional drawing 1:1 DWG of the primary element	**C59**
Maximum measuring span of pressure transmitter	
20 mbar (8.037 inH_2O)	**I01**
60 mbar (24.11 inH_2O)	**I02**
250 mbar (100.5 inH_2O)	**I03**
600 mbar (241.1 inH_2O)	**I04**
1600 mbar (643 inH_2O)	**I05**
Shut-off valves	
With mounted shut-off valves DN8 made of carbon steel, up to 300 °C with tube fitting 12 mm	**T50**
With mounted shut-off valves DN8 made of stainless steel, up to 300 °C with tube fitting 12 mm	**T51**
With mounted shut-off valves DN8 made of carbon steel, up to 300 °C and condensate vessel made of carbon steel with tube fitting 12 mm	**T56**
With mounted shut-off valves DN8 made of stainless steel, and condensate vessel made of stainless steel with tube fitting 12 mm	**T57**
Valve manifolds for mounting on primary element	
With mounted manifold (3-fold) made of stainless steel, PTFE sealings, cadmium-plated steel screws	**U40**
With mounted manifold (3-fold) made of stainless steel, PTFE sealings, stainless steel screws	**U41**
With mounted manifold (5-fold) made of stainless steel, PTFE sealings, cadmium-plated steel screws	**U42**
With mounted manifold (5-fold) made of stainless steel, PTFE sealings, stainless steel screws	**U43**
With mounted manifold (5-fold) made of carbon steel, up to 300 °C cadmium-plated steel screws and condensate vessel made of carbon steel	**U46**
With enclosed manifold (3-fold) made of stainless steel, PTFE sealings, cadmium-plated steel screws with tube fitting 12 mm	**U50**
With enclosed manifold (3-fold) made of stainless steel, PTFE sealings, stainless steel screws with tube fitting 12 mm	**U51**
With enclosed manifold (5-fold) made of stainless steel, PTFE sealings, cadmium-plated steel screws with tube fitting 12 mm	**U52**
With enclosed manifold (5-fold) made of stainless steel, PTFE sealings, stainless steel screws with tube fitting 12 mm	**U53**
With enclosed manifold (5-fold) made of carbon steel, up to 300 °C cadmium-plated steel screws with tube fitting 12 mm	**U56**
Application data	
ID number of the primary element according to sizing tool	**Y40**

* For further options, please refer to SITRANS P320.

Scope of delivery

- Orifice with pressure tapping in carrier ring
- Condensation pots for steam applications
- Shut-off valves for remote design (options T5x selected in PIA)
- Manifold for compact/remote design (options U4x, U5x selected in PIA)

© Siemens 2021

Orifice plate with pressure tappings

Dimensional drawings

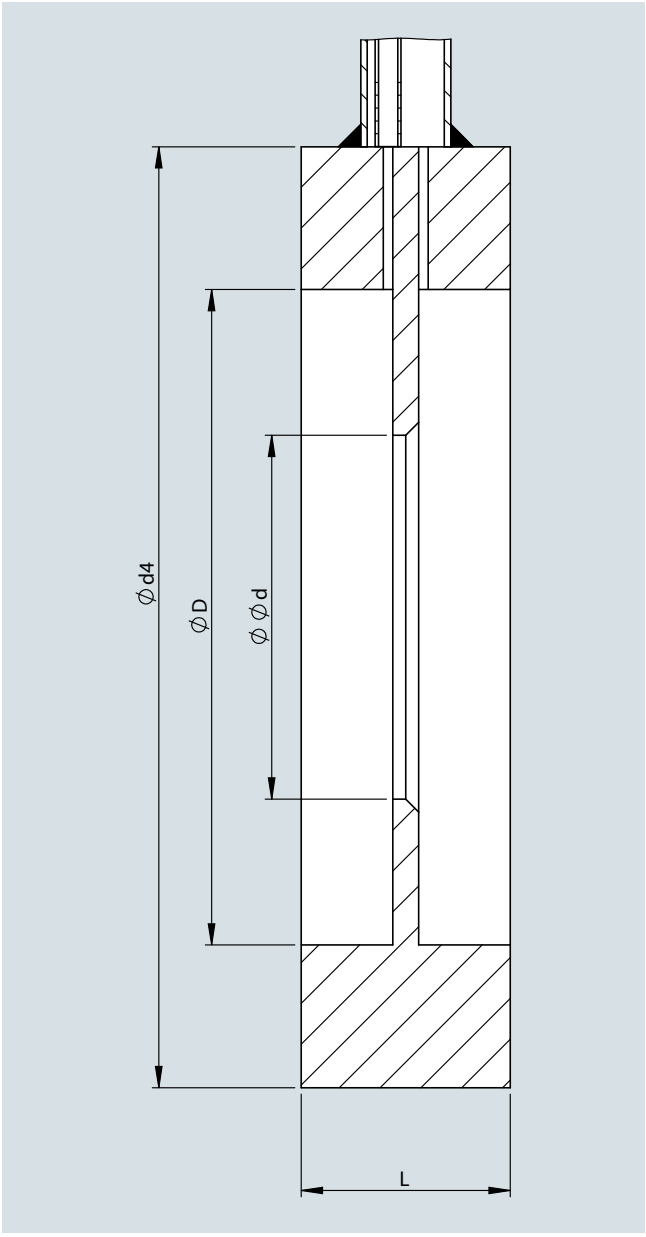

D: According to inner diameter of pipe (sizing tool)

d: According to sizing calculation

d4:

	Outer diameter d4 / Sealing face: flat						
Nominal size	**PN 6**	**PN 10**	**PN 16**	**PN 25**	**PN 40**	**PN 63**	**PN 100**
DN 50	96	107	107	107	107	113	119
DN 65	116	127	127	127	127	138	144
DN 80	132	142	142	142	142	148	154
DN 100	152	162	162	168	168	174	180
DN 125	182	192	192	194	194	210	217
DN 150	207	218	218	224	224	247	257
DN 200	262	273	273	284	290	309	324
DN 250	317	328	329	340	352	364	391
DN 300	373	378	384	400	417	424	458
DN 350	423	438	444	457	474	486	512
DN 400	473	489	495	514	546	543	-
DN 500	578	594	617	624	628	-	-

	Outer diameter d4 / Sealing face: flat		
Nominal size	**Class 150**	**Class 300**	**Class 600**
2"	105	111	111
2,5"	124	130	130
3"	137	149	149
4"	175	181	194
5"	197	216	241
6"	222	251	267
8"	279	308	321
10"	340	362	400
12"	410	422	457
14"	451	486	492
16"	514	540	565
20"	549	597	613

© Siemens 2021

Application



SITRANS FP230 compact design



SITRANS FPS200 remote design

Orifice plate with annular chamber pressure tapping in carbon or stainless steel for flow measurement of gas, steam and liquid.

Design

Annular chamber orifice plates consist of two rings pressed together, between which the orifice plate is clamped. The pressure is measured upstream and downstream through an annular chamber. The accuracy is comparable to that of the standard orifice plate.

Orifice plates with annular chamber tappings consist of a two-piece carrier ring with annular chamber and integral tappings and an inserted orifice plate. Pressure before and after the orifice is averaged through the annular chamber. Tapping connections are integrated into each part of the carrier ring. Differential pressure connection can be compact and remote. The instruments are easy to handle and offer good accuracy with reasonable inlet and outlet runs. They are installed between regular flanges. The orifice can be disassembled to replace the inserted orifice plate.

Nominal sizes

- EN: DN 50 ... 600
- ASME: 2 ... 24 inch

Nominal pressure

- EN: PN 6 ... 64 (for steam applications maximum of PN 16 is recommended)
- ASME: class 150 ... 600 (for steam applications maximum of class 150 is recommended)

Pressure tapping

- Annular chamber: Corner tapping through annular chamber

Connection length

- Suitable for gases and liquids for a maximum of approx. 80 mm pipe insulation
- Suitable for steam for a maximum of approx. 140 mm pipe insulation

Sealing face

- According to EN 1092-1: flat (for flanges form B1 and B2)
- According to ASME B16.5: flat (for flanges RF and SF)

Overall length

- 65 mm

Material

- Carrier ring: Carbon steel / orifice plate: 316L/1.4404
- Carrier ring: 316L/1.4404 / orifice plate: 316L/1.4404

Gaskets

- Gas and liquids: Klingersil C4400
- Steam: Graphite with stainless steel inlay

© Siemens 2021

3

Design (continued)

Tapping sockets

Gases and liquids

Remote design

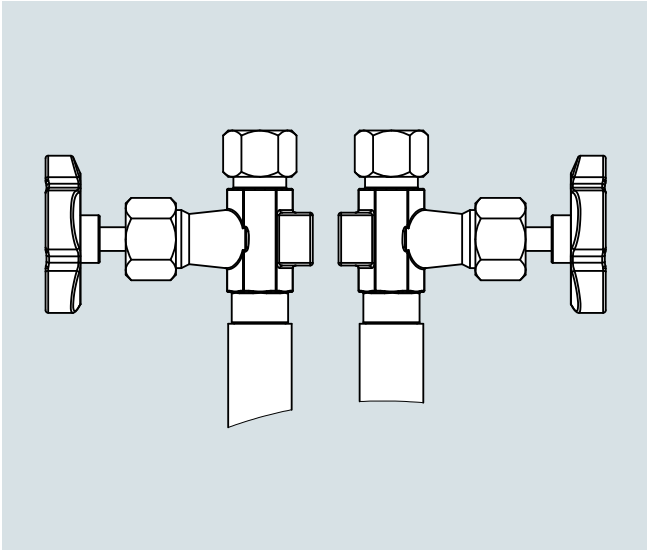

For annular chamber orifice plates in remote design, the angle α between the pressure tap depends on the pressure rating and the nominal size of the flanges.

Compact design

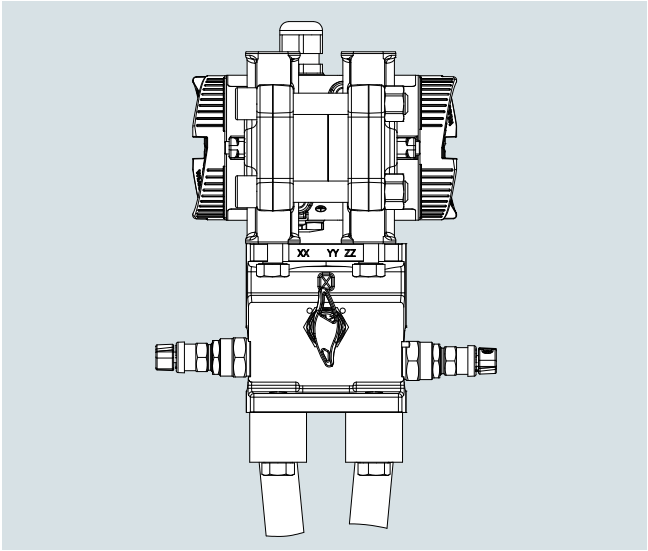

For annular chamber orifice plates in compact design, so-called oval flanges are used. The manifold and the differential pressure transmitter are mounted on these oval flanges.

Tap position/angle in horizontal pipe:

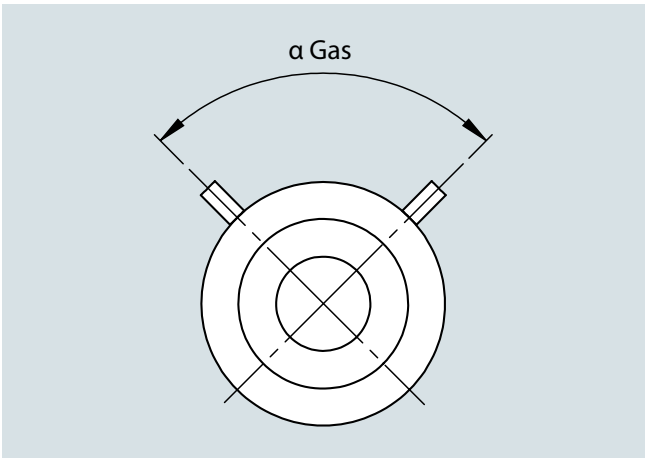

Tap position/angle in horizontal pipe (gas)

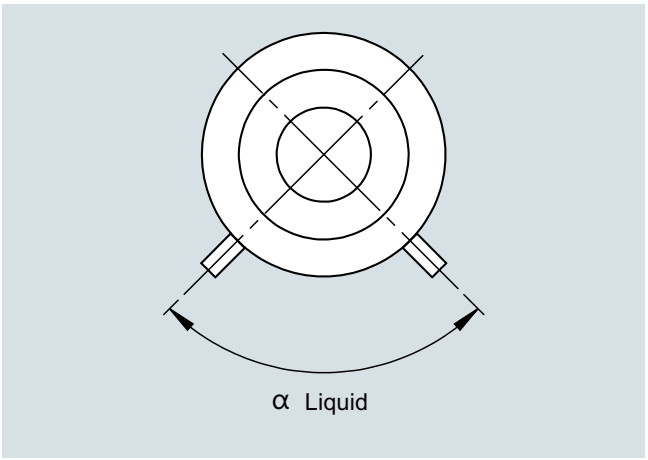

Tap position/angle in horizontal pipe (liquid)

© Siemens 2021

Design (continued)

	DIN flange					
Nominal size	**PN 6**	**PN 10**	**PN 16**	**PN 25**	**PN 40**	**PN 64**
DN 50	135	135	135	135	135	135
DN 65	135	135	135*)	90	90	90
DN 80	135	90	90	90	90	90
DN 100	135	90	90	90	90	90
DN 125	90	90	90	90	90	90
DN 150	90	90	90	90	90	90
DN 175	90	90	90	60	60	60
DN 200	90	90	60	60	60	60
DN 250	60	60	60	60	60	60
DN 300	60	60	60	45	45	45
DN 350	60	45	45	45	45	45
DN 400	45	45	45	45	45	45
DN 450	45	36	36	36	-	-
DN 500	36	36	36	36	36	36

	ANSI flange		
Nominal size	**Class 150**	**Class 300**	**Class 600**
2"	135	90	90
2.5"	135	90	90
3"	135	90	90
4"	90	90	90
5"	90	90	90
6"	90	60	60
8"	90	60	60
10"	60	45	45
12"	60	45	36
14"	60	36	36
16"	45	36	36
18"	45	30	36
20"	36	30	30
22"	36	30	30
24"	36	30	30

*) Fitting for DN 65 PN 16 flange with 4 holes. If design for flange with 8 holes is required, please add a comment to the corresponding project within the sizing tool.

© Siemens 2021

3

Design (continued)

Wet gases

Remote design

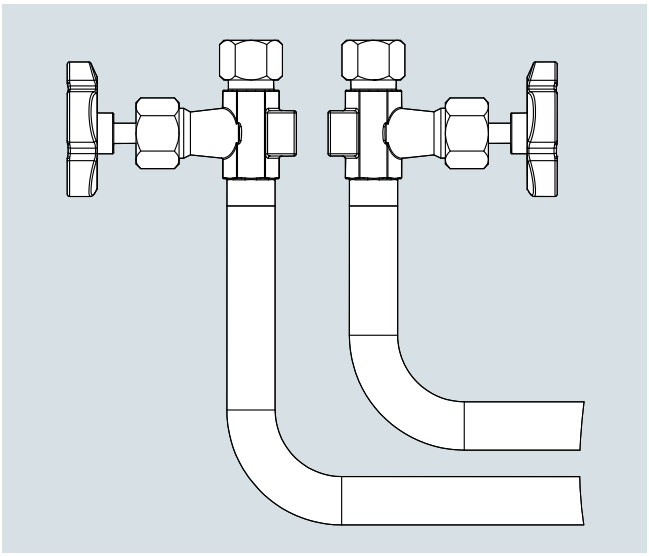

For annular chamber orifice plates in remote design for wet gases, nozzles bent at right angles with welded-on valves are used. This design is only necessary **for vertical pipes**. For horizontal pipes, the design for gases and liquids can be selected because the nozzles point up as listed in the table above.

Compact design

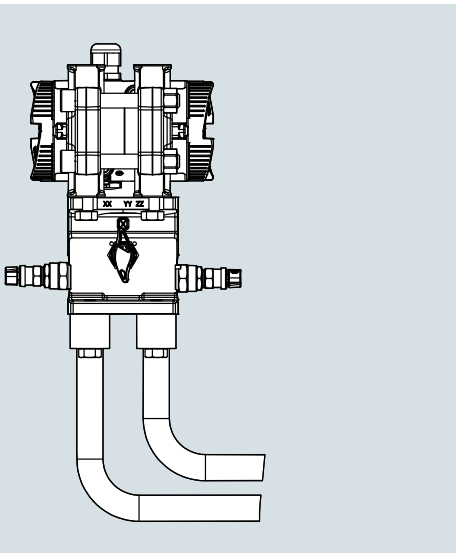

For annular chamber orifice plates in compact design for wet gases, nozzles bent at right angles with oval flanges are used. The manifold and the differential pressure transmitter are mounted on these oval flanges. This design is only necessary **for vertical pipes**. For horizontal pipes, the design for gases and liquids can be selected because the flange plate with manifold and transmitter always points up.

Steam

Remote design

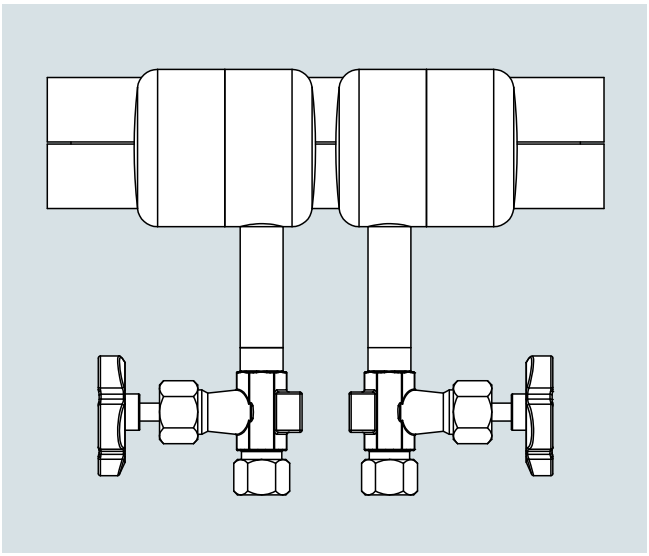

For annular chamber orifice plates in remote design for steam, the condensate vessels with shut-off valves are mounted at an angle of 0°.

Compact design

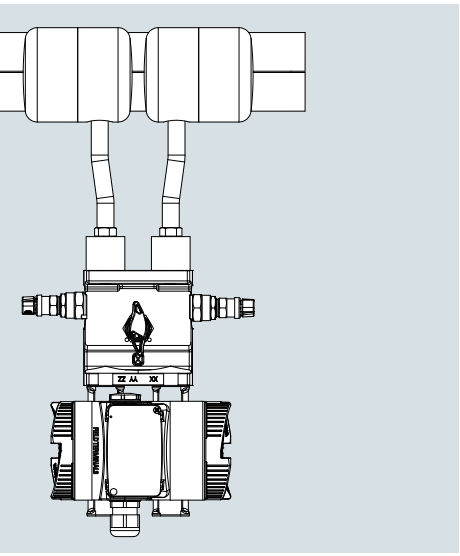

For annular chamber orifice plates in compact design for steam, the condensate vessels are mounted on one side. The manifold and the differential pressure transmitter are mounted to the condensate vessels using oval flanges. The condensate vessels are equipped with filling nozzles, which means a 3-way manifold can be used.

© Siemens 2021

Selection and ordering data

	Article No.												
SITRANS FP230/FPS200 orifice plate with annular chamber ↗	**7ME172**	■	-	■	■	■	0	-	■	■	■	■	
↗ Click on the Article No. for the online configuration in the PIA Life Cycle Portal.													
Communication													
HART (4 ... 20 mA)		0											
Without transmitter		8											
Nominal size													
DN 50 (2“)				1	D								
DN 65 (2½“)				1	E								
DN 80 (3“)				1	F								
DN 100 (4“)				2	G								
DN 125 (5“)				2	H								
DN 150 (6“)				2	J								
DN 200 (8“)				2	K								
DN 250 (10“)				2	L								
DN 300 (12“)				2	M								
DN 350 (14“)				2	N								
DN 400 (16“)				2	P								
DN 450 (18“)				2	Q								
DN 500 (20“)				2	R								
DN 600 (24“)				2	S								
Nominal pressure													
Flange EN 1092-1 Form B1 PN 6						A							
Flange EN 1092-1 Form B1 PN 10						B							
Flange EN 1092-1 Form B1 PN 16						C							
Flange EN 1092-1 Form B1 PN 25						D							
Flange EN 1092-1 Form B1 PN 40						E							
Flange EN 1092-1 Form B1 PN 64						F							
Flange ASME B16.5 Class 150						Q							
Flange ASME B16.5 Class 300						R							
Flange ASME B16.5 Class 600						S							
Wetted part materials													
Carrier ring: Carbon steel / orifice plate: 316L/1.4404							2						
Carrier ring: 316L/1.4404 / orifice plate: 316L/1.4404							3						
System design													
Compact design for dry gases (horizontal and vertical pipes)									0				
Compact design for liquids									1				
Compact design for wet gases (only vertical pipes)									2				
Compact design for steam									3				
Remote design for dry gases									4				
Remote design for liquids									5				
Remote design for wet gases									6				
Remote design for steam									7				
Type of protection of pressure transmitter													
No Ex / without pressure tranmitter										A			
Intrinsic safety										B			
Explosion proof										C			
Intrinsic safety, Explosion proof										D			
Dust ignition proof zone 21/22 (DIP), increased safety zone 2										L			
Dust ignition proof zone 20/21/22 (DIP), increased safety zone 2										M			
Intrinsic safety, Explosion proof, Dust ignition proof zone 21/22 (DIP), increased safety zone 2										S			
Intrinsic safety, Explosion proof, Dust ignition proof zone 21/22 (DIP), increased safety zone 2, class division										T			
Electrical connections/cable entries of pressure transmitter													
Without pressure transmitter											A		
2 x M20 x 1.5											F		
2 x 1/2-14 NPT											M		
Local operation/display of pressure transmitter													
Without display (closed lid) / without pressure tranmitter													0
With display (closed lid)													1
With display (lid with glass window)													2

© Siemens 2021

Orifice plate with annular chamber

Selection and ordering data	Order code
*Further designs**	
Please add "**-Z**" to Article No. and specify Order code(s) and plain text.	
Certificates of primary element incl. manifolds	
Inspection certificate of the primary element (EN 10204-3.1) - material of pressure-containing and wetted parts	**C52**
Factory certificate of the primary element (EN 10204-2.2) - wetted parts (MR 0175-2015)	**C54**
Dimensional record of the primary element	**C55**
Inspection certificate (DIN EN 571-1) - dye penetration test of weldings	**C56**
Hydrostatic pressure test of the primary element (EN 13480-5) of weldings	**C58**
Dimensional drawing 1:1 DWG of the primary element	**C59**
Maximum measuring span of pressure transmitter	
20 mbar (8.037 inH_2O)	**I01**
60 mbar (24.11 inH_2O)	**I02**
250 mbar (100.5 inH_2O)	**I03**
600 mbar (241.1 inH_2O)	**I04**
1600 mbar (643 inH_2O)	**I05**
Shut-off valves	
With mounted shut-off valves DN8 made of carbon steel, up to 300 °C with tube fitting 12 mm	**T50**
With mounted shut-off valves DN8 made of stainless steel, up to 300 °C with tube fitting 12 mm	**T51**
With mounted shut-off valves DN8 made of carbon steel, up to 300 °C and condensate vessel made of carbon steel with tube fitting 12 mm	**T56**
With mounted shut-off valves DN8 made of stainless steel, and condensate vessel made of stainless steel with tube fitting 12 mm	**T57**
Valve manifolds for mounting on primary element	
With mounted manifold (3-fold) made of stainless steel, PTFE sealings, cadmium-plated steel screws	**U40**
With mounted manifold (3-fold) made of stainless steel, PTFE sealings, stainless steel screws	**U41**
With mounted manifold (5-fold) made of stainless steel, PTFE sealings, cadmium-plated steel screws	**U42**
With mounted manifold (5-fold) made of stainless steel, PTFE sealings, stainless steel screws	**U43**
With mounted manifold (5-fold) made of carbon steel, up to 300 °C cadmium-plated steel screws and condensate vessel made of carbon steel	**U46**
With mounted manifold (3-fold) made of stainless steel, PTFE sealings, stainless steel screws and condensation vessels incl. filling union 1/2" NPT made of stainless steel	**U47**
With enclosed manifold (3-fold) made of stainless steel, PTFE sealings, cadmium-plated steel screws with tube fitting 12 mm	**U50**
With enclosed manifold (3-fold) made of stainless steel, PTFE sealings, stainless steel screws with tube fitting 12 mm	**U51**
With enclosed manifold (5-fold) made of stainless steel, PTFE sealings, cadmium-plated steel screws with tube fitting 12 mm	**U52**
With enclosed manifold (5-fold) made of stainless steel, PTFE sealings, stainless steel screws with tube fitting 12 mm	**U53**
With enclosed manifold (5-fold) made of carbon steel, up to 300 °C cadmium-plated steel screws with tube fitting 12 mm	**U56**
Application data	
ID number of the primary element according to sizing tool	**Y40**

* For further options, please refer to SITRANS P320.

Scope of delivery

- Annular chamber consisting of two pieces, each with integrated pressure tapping
- Orifice plate mounted in annular chamber
- Gasket for annular chamber
- Condensation pots for steam applications
- Shut-off valves for remote design (options T5x selected in PIA)
- Manifold for compact/remote design (options U4x, U5x selected in PIA)

© Siemens 2021

Dimensional drawings

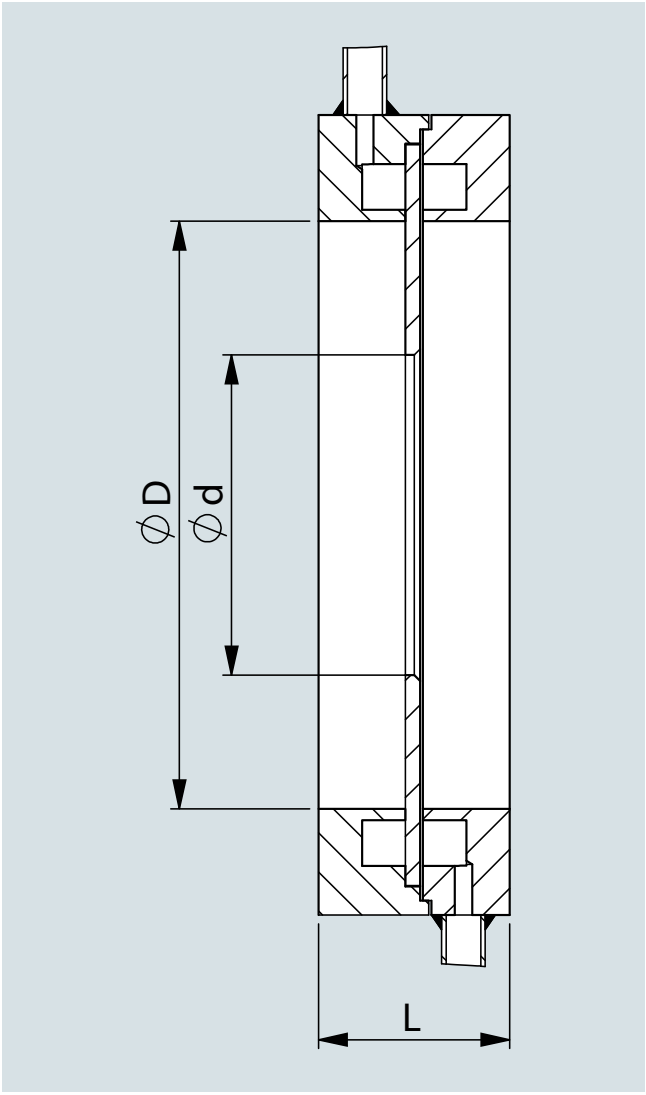

D: According to inner diameter of pipe (sizing tool)

d: According to sizing calculation

L: See overall length above

d4:

	Outer diameter d4 / Sealing face: flat						
Nominal size	**PN 6**	**PN 10**	**PN 16**	**PN 25**	**PN 40**	**PN 63**	**PN 100**
DN 50	96	107	107	107	107	113	119
DN 65	116	127	127	127	127	138	144
DN 80	132	142	142	142	142	148	154
DN 100	152	162	162	168	168	174	180
DN 125	182	192	192	194	194	210	217
DN 150	207	218	218	224	224	247	257
DN 200	262	273	273	284	290	309	324
DN 250	317	328	329	340	352	364	391
DN 300	373	378	384	400	417	424	458
DN 350	423	438	444	457	474	486	512
DN 400	473	489	495	514	546	543	-
DN 500	578	594	617	624	628	-	-

	Outer diameter d4 / Sealing face: flat		
Nominal size	**Class 150**	**Class 300**	**Class 600**
2"	105	111	111
2,5"	124	130	130
3"	137	149	149
4"	175	181	194
5"	197	216	241
6"	222	251	267
8"	279	308	321
10"	340	362	400
12"	410	422	457
14"	451	486	492
16"	514	540	565
20"	549	597	613

© Siemens 2021

Orifice meter run

Application

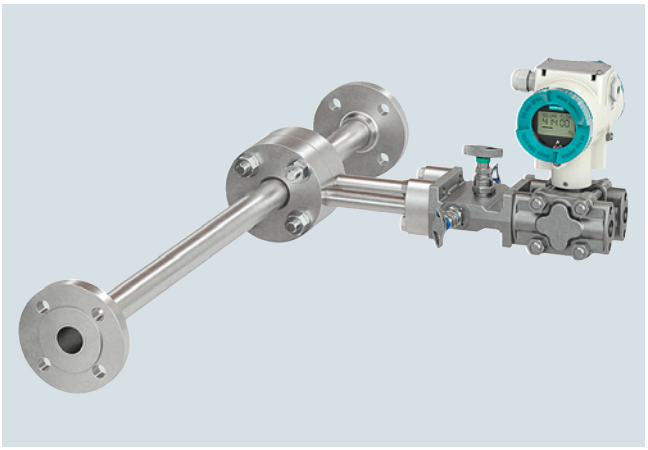

SITRANS FP230 compact design



SITRANS FPS200 remote design

Orifice meter run with flanges ends in carbon or stainless steel for flow measurement of gas, steam and liquid.

Design

Orifice meter runs for small diameter pipes come with partial straight inlet and outlet pipe runs with flanged ends. The pipes are connected to an annular chamber where the orifice plate is mounted. The annular chamber consists of a two-piece carrier ring with annular chamber and integral tappings and an inserted orifice plate.

Pressure before and after the orifice is averaged through the annular chamber. Tapping connections are integrated into each part of the carrier ring. Differential pressure connection can be compact and remote. The instruments are easy to install in the pipe system. Additional straight pipe length may be required before and after the orifice meter run. The orifice can be disassembled to replace the inserted orifice plate.

Nominal sizes
- EN: DN 10 ... 50
- ASME: 3/8 ... 2 inch

Nominal pressure
- EN: PN 6 ... 64
- ASME: class 150 ... 600

Pressure tapping
- Annular chamber: Corner tapping through annular chamber

Connection length
- Suitable for gases for a maximum of approx. 80 mm pipe insulation
- Suitable for steam for a maximum of approx. 140 mm pipe insulation

Sealing face
- According to EN 1092-1: flat (for flanges form B1 and B2)
- According to ASME B16.5: flat (for flanges RF and SF)

Overall length
- See table below

Material
- Pipe/Flanges: Carbon steel / orifice plate: 316L/1.4404
- Pipe/Flanges: 316L/1.4404 / orifice plate: 316L/1.4404

Gaskets
- Gas and liquids: Klingersil C4400
- Steam: Graphite with stainless steel inlay

© Siemens 2021

Design (continued)

Tapping sockets

Gases and liquids

Remote design

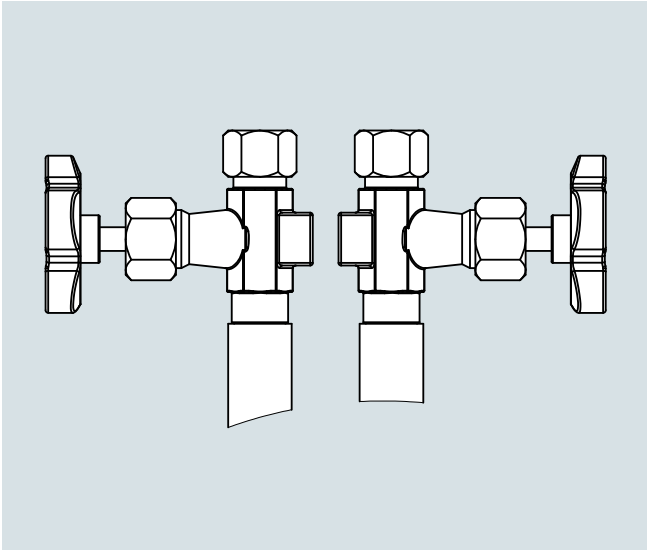

For metering pipes in remote design, the angle α between the pressure taps is 135°.

Compact design

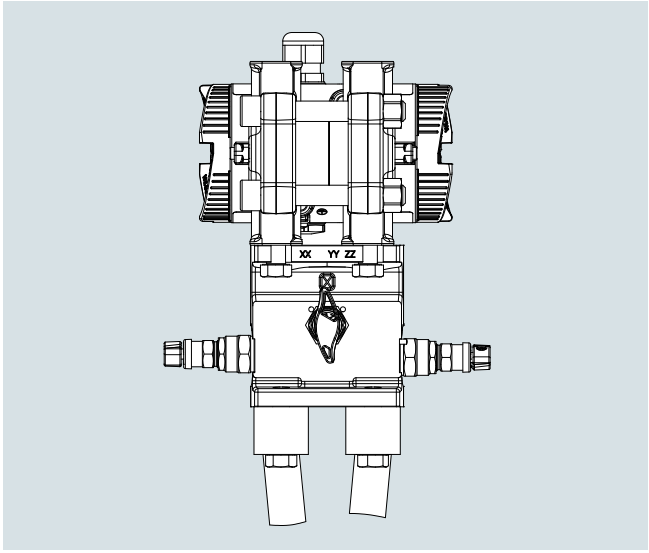

For metering pipes in compact design, so-called oval flanges are used. The manifold and the differential pressure transmitter are mounted on these oval flanges.

Tap position/angle in horizontal pipe:

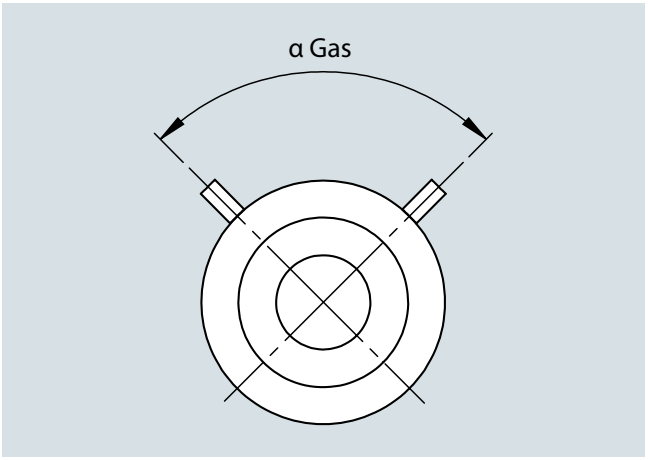

Tap position/angle in horizontal pipe (gas)

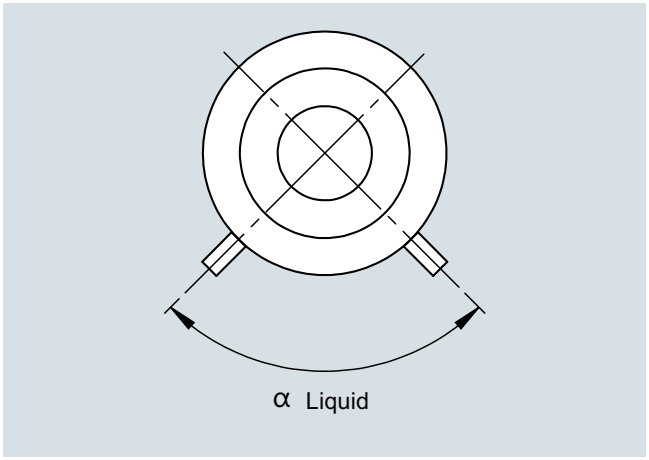

Tap position/angle in horizontal pipe (liquid)

© Siemens 2021

3

Design (continued)

Wet gases

Remote design

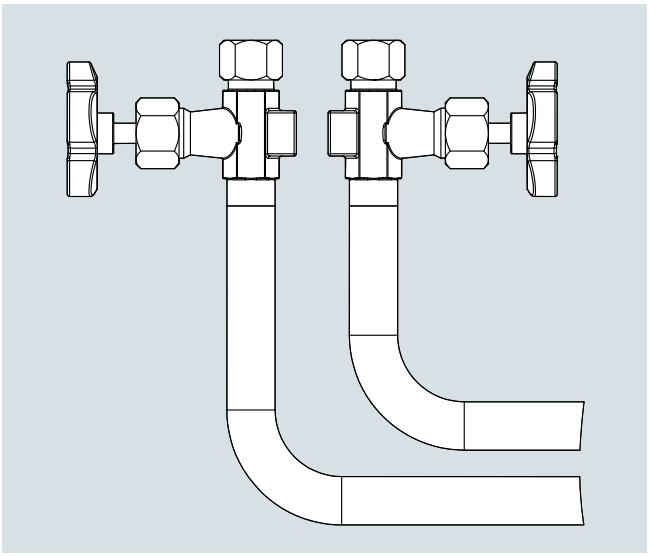

For metering pipes in remote design for wet gases, nozzles bent at right angles with welded-on valves are used. This design is only necessary for vertical pipes. For horizontal pipes, the design for gases and liquids can be selected because the nozzles point up as listed in the table above.

Compact design

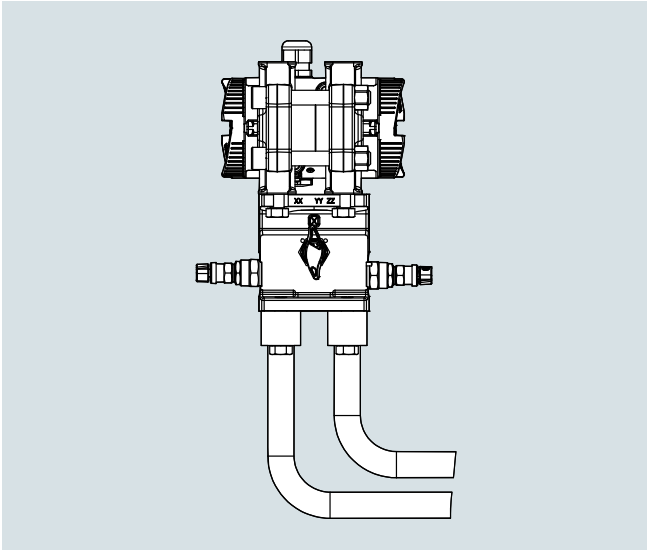

For metering pipes in compact design for wet gases, nozzles bent at right angles with oval flanges are used. The manifold and the differential pressure transmitter are mounted on these oval flanges. This design is only necessary for vertical pipes. For horizontal pipes, the design for gases and liquids can be selected because the flange plate with manifold and transmitter always points up.

Steam

Remote design

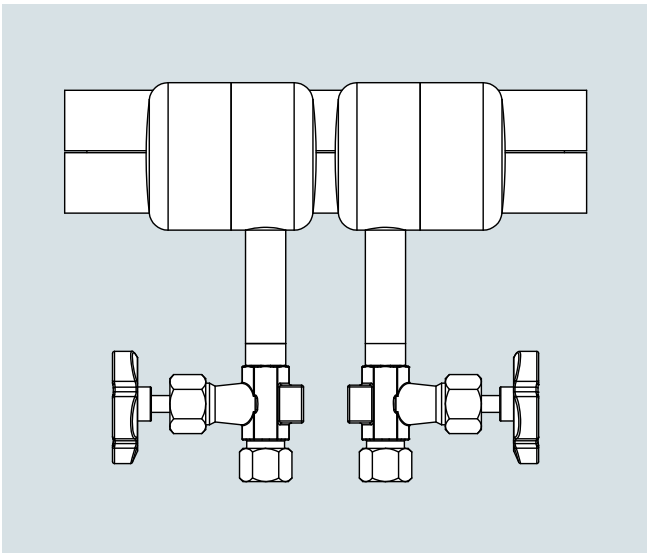

For metering pipes in remote design for steam, the condensate vessels with shut-off valves are mounted at an angle of 180°.

Compact design

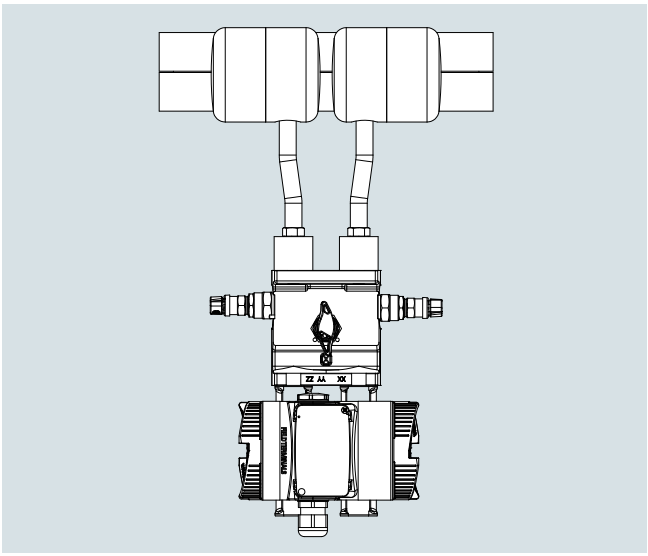

For metering pipes in compact design for steam, the condensate vessels are mounted on one side. The manifold and the differential pressure transmitter are mounted to the condensate vessels using oval flanges. The condensate vessels are equipped with filling nozzles, which means a 3-way manifold can be used.

© Siemens 2021

Selection and ordering data

	Article No.												
SITRANS FP230/FPS200 orifice meter run ↗	**7ME173**	■	-	■	■	■	**0**	-	■	■	■	■	
↗ Click on the Article No. for the online configuration in the PIA Life Cycle Portal.													
Communication													
HARTHART (4 ... 20 mA)		**0**											
Without transmitter		**8**											
Nominal size													
DN 10 (3/8“)				**0**	**A**								
DN 15 (½“)				**0**	**B**								
DN 20 (¾“)				**0**	**C**								
DN 25 (1“)				**0**	**D**								
DN 32 (1¼“)				**0**	**E**								
DN 40 (1½“)				**1**	**C**								
DN 50 (2“)				**1**	**D**								
Nominal pressure													
Flange EN 1092-1 Form B1 PN 6						**A**							
Flange EN 1092-1 Form B1 PN 10						**B**							
Flange EN 1092-1 Form B1 PN 16						**C**							
Flange EN 1092-1 Form B1 PN 25						**D**							
Flange EN 1092-1 Form B1 PN 40						**E**							
Flange EN 1092-1 Form B1 PN 64						**F**							
Flange ASME B16.5 Class 150						**Q**							
Flange ASME B16.5 Class 300						**R**							
Flange ASME B16.5 Class 600						**S**							
Wetted parts material													
Pipe/Flanges: Carbon steel / orifice plate: 316L/1.4404							**4**						
Pipe/Flanges: 316L/1.4404 / orifice plate: 316L/1.4404							**5**						
System design													
Compact design for dry gases (horizontal and vertical pipes)									**0**				
Compact design for liquids									**1**				
Compact design for wet gases (only vertical pipes)									**2**				
Compact design for steam									**3**				
Remote design for dry gases									**4**				
Remote design for liquids									**5**				
Remote design for wet gases									**6**				
Remote design for steam									**7**				
Type of protection of pressure transmitter													
No Ex / without pressure tranmitter										**A**			
Intrinsic safety										**B**			
Explosion proof										**C**			
Intrinsic safety, Explosion proof										**D**			
Dust ignition proof zone 21/22 (DIP), increased safety zone 2										**L**			
Dust ignition proof zone 20/21/22 (DIP), increased safety zone 2										**M**			
Intrinsic safety, Explosion proof, Dust ignition proof zone 21/22 (DIP), increased safety zone 2										**S**			
Intrinsic safety, Explosion proof, Dust ignition proof zone 21/22 (DIP), increased safety zone 2, class division										**T**			
Electrical connections/cable entries of pressure transmitter													
Without pressure transmitter											**A**		
2 x M20 x 1.5											**F**		
2 x 1/2-14 NPT											**M**		
Local operation/display of pressure transmitter													
Without display (closed lid) / without pressure tranmitter												**0**	
With display (closed lid)												**1**	
With display (lid with glass window)												**2**	

© Siemens 2021

Orifice meter run

Selection and ordering data	Order code
*Further designs**	
Please add "**-Z**" to Article No. and specify Order code(s) and plain text.	
Certificates of primary element incl. manifolds	
Inspection certificate of the primary element (EN 10204-3.1) - material of pressure-containing and wetted parts	**C52**
Factory certificate of the primary element (EN 10204-2.2) - wetted parts (MR 0175-2015)	**C54**
Dimensional record of the primary element	**C55**
Inspection certificate (DIN EN 571-1) - dye penetration test of weldings	**C56**
Hydrostatic pressure test of the primary element (EN 13480-5) of weldings	**C58**
Dimensional drawing 1:1 DWG of the primary element	**C59**
Maximum measuring span of pressure transmitter	
20 mbar (8.037 inH_2O)	**I01**
60 mbar (24.11 inH_2O)	**I02**
250 mbar (100.5 inH_2O)	**I03**
600 mbar (241.1 inH_2O)	**I04**
1600 mbar (643 inH_2O)	**I05**
Shut-off valves	
With mounted shut-off valves DN8 made of carbon steel, up to 300 °C with tube fitting 12 mm	**T50**
With mounted shut-off valves DN8 made of stainless steel, up to 300 °C with tube fitting 12 mm	**T51**
With mounted shut-off valves DN8 made of carbon steel, up to 300 °C and condensate vessel made of carbon steel with tube fitting 12 mm	**T56**
With mounted shut-off valves DN8 made of stainless steel, and condensate vessel made of stainless steel with tube fitting 12 mm	**T57**
Valve manifolds for mounting on primary element	
With mounted manifold (3-fold) made of stainless steel, PTFE sealings, cadmium-plated steel screws	**U40**
With mounted manifold (3-fold) made of stainless steel, PTFE sealings, stainless steel screws	**U41**
With mounted manifold (5-fold) made of stainless steel, PTFE sealings, cadmium-plated steel screws	**U42**
With mounted manifold (5-fold) made of stainless steel, PTFE sealings, stainless steel screws	**U43**
With mounted manifold (5-fold) made of carbon steel, up to 300 °C cadmium-plated steel screws and condensate vessel made of carbon steel	**U46**
With mounted manifold (3-fold) made of stainless steel, PTFE sealings, stainless steel screws and condensation vessels incl. filling union 1/2" NPT made of stainless steel	**U47**
With enclosed manifold (3-fold) made of stainless steel, PTFE sealings, cadmium-plated steel screws with tube fitting 12 mm	**U50**
With enclosed manifold (3-fold) made of stainless steel, PTFE sealings, stainless steel screws with tube fitting 12 mm	**U51**
With enclosed manifold (5-fold) made of stainless steel, PTFE sealings, cadmium-plated steel screws with tube fitting 12 mm	**U52**
With enclosed manifold (5-fold) made of stainless steel, PTFE sealings, stainless steel screws with tube fitting 12 mm	**U53**
With enclosed manifold (5-fold) made of carbon steel, up to 300 °C cadmium-plated steel screws with tube fitting 12 mm	**U56**
Application data	
ID number of the primary element according to sizing tool	**Y40**

* For further options, please refer to SITRANS P320.

Scope of delivery

- Orifice meter run consisting of 2 parts, each with flanged ends, pipe, and annular chamber with integrated pressure tapping
- Orifice plate mounted in annular chamber
- Gasket for annular chamber
- Screws and nuts for annular chamber
- Condensation pots for steam applications
- Shut-off valves for remote design (options T5x selected in PIA)
- Manifold for compact/remote design (options U4x, U5x selected in PIA)

© Siemens 2021

Dimensional drawings

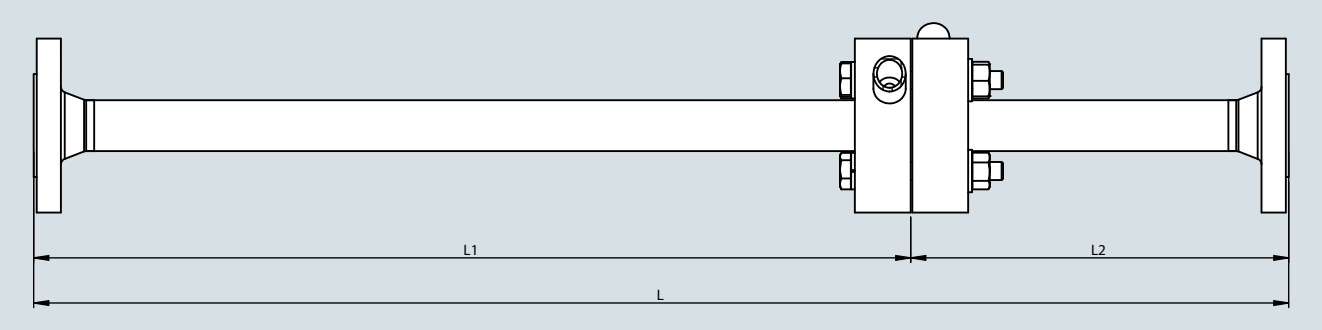

Overall length

Nominal size	DN 10	DN 15	DN 20	DN 25	DN 32	DN 40	DN 50
	3/8“	½“	¾“	1“	1 ¼“	1 ½“	2“
L	400	550	700	900	1100	1300	1500
L1	230	380	500	650	800	1000	1200
L2	170	170	200	250	300	300	300

Pipe dimensions

Carbon steel							
Nominal size	**PN 16**	**PN 40**	**PN 63**	**Nominal size**	**Class 150**	**Class 300**	**Class 600**
DN 10	21.3 × 6.3	21.3 × 6,3	21.3 × 6,3	**3/8"**	21.3 × 7.47*)	21.3 × 7.47*)	21.3 × 7.47*)
DN 15	21.3 × 2.6	21.3 × 2.6	21.3 × 2.6	**½"**	21.3 × 3.73	21.3 × 3.73	21.3 × 3.73
DN 20	26.9 × 2.6	26.9 × 2.6	26.9 × 2.6	**¾"**	26.7 × 2.87	26.7 × 2.87	26,7 × 2.87
DN 25	33.7 × 2.6	33,7 × 2.6	33,7 × 2.6	**1"**	33.4 × 3.38	33.4 × 3.38	33.4 × 3.38
DN 32	42.4 × 2.6	42.4 × 2.6	n/a	**1 ¼"**	42.2 × 3.56	42.2 × 3.56	42.2 × 3.56
DN 40	48.3 × 2.6	48.3 × 2.6	48.3 × 2.9	**1 ½"**	48.3 × 3.68	48.3 × 3.68	48.3 × 3.68
DN 50	60.3 × 2.9	60.3 × 2.9	60.3 × 3.6	**2"**	60.3 × 3.91	60.3 × 3.91	60.3 × 3.91

Stainless steel							
Nominal size	**PN 16**	**PN 40**	**PN 63**	**Nominal size**	**Class 150**	**Class 300**	**Class 600**
DN 10	21.3 × 7.47	21.3 × 7.47	21.3 × 7.47	**3/8"**	21.3 × 2.77*)	21.3 × 2.77*)	21.3 × 2.77*)
DN 15	21.3 × 2.77	21.3 × 2.77	21.3 × 3.73	**½"**	21.3 × 2.77	21.3 × 2.77	21.3 × 2.77
DN 20	26.7 × 2.87	26.7 × 2.87	26.7 × 3.91	**¾"**	26.7 × 2.87	26.7 × 2.87	26.7 × 2.87
DN 25	33.4 × 3.38	33.4 × 3.38	33.4 × 3.38	**1"**	33.4 × 3.38	33.4 × 3.38	33.4 × 3.38
DN 32	42.2 × 3.56	42.2 × 3.56	n/a	**1 ¼"**	42.2 × 3.56	42.2 × 3.56	42.2 × 3.56
DN 40	48.3 × 2.77	48.3 × 2.77	48.3 × 3.68	**1 ½"**	48.3 × 3.68	48.3 × 3.68	48.3 × 3.68
DN 50	60.3 × 3.91	60.3 × 3.91	60.3 × 3.91	**2"**	60.3 × 3.91	60.3 × 3.91	60.3 × 3.91

*) Orifice meter runs with 3/8“ diameter will be built with ½" flanges.

© Siemens 2021

Orifice plate

Application



SITRANS FPS200 remote design

Orifice plate for installation between flanges in stainless steel for flow measurement of gas, steam and liquid.

Design

Orifice plates for the installation with flange tappings consist of the orifice plate with a welded-on marking and grip plate. The plates have no pressure tappings and are therefore normally mounted between measuring flanges containing the pressure tappings.

Pressure tapping

- Not included

Sealing face

- According to EN 1092-1: flat (for flanges form B1 and B2)
- According to ASME B16.5: flat (for flanges RF and SF)

Material

- 316L/1.4404

© Siemens 2021

Selection and ordering data

	Article No.												
SITRANS FP230/FPS200 insertion orifice plate ↗	**7ME174**	■	-	■	■	■	**0**	-	■	■	■	■	
↗ Click on the Article No. for the online configuration in the PIA Life Cycle Portal.													
Communication													
HART (4 ... 20 mA)		**0**											
Without transmitter		**8**											
Nominal size													
DN 50 (2“)				**1**	**D**								
DN 65 (2½“)				**1**	**E**								
DN 80 (3“)				**1**	**F**								
DN 100 (4“)				**2**	**G**								
DN 125 (5“)				**2**	**H**								
DN 150 (6“)				**2**	**J**								
DN 200 (8“)				**2**	**K**								
DN 250 (10“)				**2**	**L**								
DN 300 (12“)				**2**	**M**								
DN 350 (14“)				**2**	**N**								
DN 400 (16“)				**2**	**P**								
DN 450 (18“)				**2**	**Q**								
DN 500 (20“)				**2**	**R**								
DN 600 (24“)				**2**	**S**								
Nominal pressure													
Flange EN 1092-1 Form B1 PN 6						**A**							
Flange EN 1092-1 Form B1 PN 10						**B**							
Flange EN 1092-1 Form B1 PN 16						**C**							
Flange EN 1092-1 Form B1 PN 25						**D**							
Flange EN 1092-1 Form B1 PN 40						**E**							
Flange EN 1092-1 Form B1 PN 64						**F**							
Flange EN 1092-1 Form B1 PN 100						**G**							
Flange ASME B16.5 Class 150						**Q**							
Flange ASME B16.5 Class 300						**R**							
Flange ASME B16.5 Class 600						**S**							
Wetted parts material													
Orifice plate: 316L/1.4404							**6**						
System design													
Without connection for pressure lines									**8**				
Type of protection of pressure transmitter													
No Ex / without pressure tranmitter										**A**			
Intrinsic safety										**B**			
Explosion proof										**C**			
Intrinsic safety, Explosion proof										**D**			
Dust ignition proof zone 21/22 (DIP), increased safety zone 2										**L**			
Dust ignition proof zone 20/21/22 (DIP), increased safety zone 2										**M**			
Intrinsic safety, Explosion proof, Dust ignition proof zone 21/22 (DIP), increased safety zone 2										**S**			
Intrinsic safety, Explosion proof, Dust ignition proof zone 21/22 (DIP), increased safety zone 2, class division										**T**			
Electrical connections/cable entries of pressure transmitter													
Without pressure transmitter											**A**		
2 x M20 x 1.5											**F**		
2 x 1/2-14 NPT											**M**		
Local operation/display of pressure transmitter													
Without display (closed lid) / without pressure tranmitter													**0**
With display (closed lid)													**1**
With display (lid with glass window)													**2**

© Siemens 2021

Orifice plate

Selection and ordering data

	Order code
Further designs*	
Please add "**-Z**" to Article No. and specify Order code(s) and plain text.	
Certificates of primary element incl. manifolds	
Inspection certificate of the primary element (EN 10204-3.1) - material of pressure-containing and wetted parts	**C52**
Factory certificate of the primary element (EN 10204-2.2) - wetted parts (MR 0175-2015)	**C54**
Dimensional record of the primary element	**C55**
Dimensional drawing 1:1 DWG of the primary element	**C59**
Maximum measuring span of pressure transmitter	
20 mbar (8.037 inH_2O)	**I01**
60 mbar (24.11 inH_2O)	**I02**
250 mbar (100.5 inH_2O)	**I03**
600 mbar (241.1 inH_2O)	**I04**
1600 mbar (643 inH_2O)	**I05**
Valve manifolds for mounting on primary element	
With enclosed manifold (3-fold) made of stainless steel, PTFE sealings, cadmium-plated steel screws with tube fitting 12 mm	**U50**
With enclosed manifold (3-fold) made of stainless steel, PTFE sealings, stainless steel screws with tube fitting 12 mm	**U51**
With enclosed manifold (5-fold) made of stainless steel, PTFE sealings, cadmium-plated steel screws with tube fitting 12 mm	**U52**
With enclosed manifold (5-fold) made of stainless steel, PTFE sealings, stainless steel screws with tube fitting 12 mm	**U53**
Application data	
ID number of the primary element according to sizing tool	**Y40**

* For further options, please refer to SITRANS P320.

Scope of delivery

- Orifice plate
- Manifold for compact/remote design (options U4x, U5x selected in PIA)

Dimensional drawings

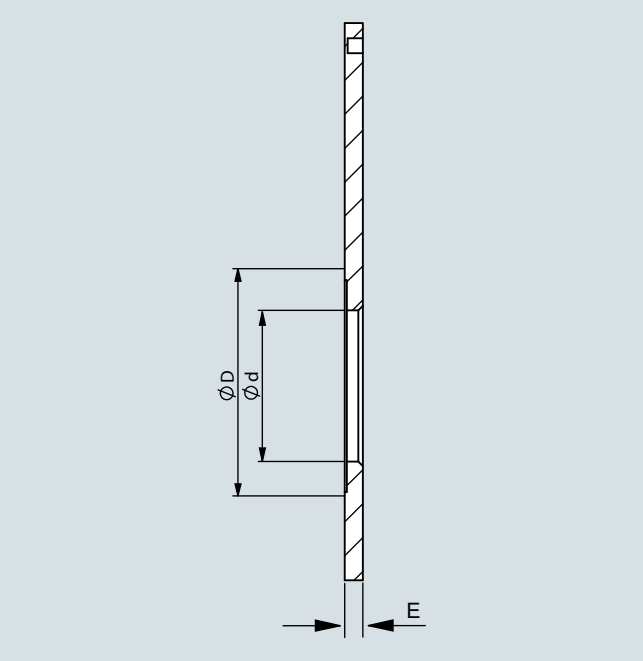

Nominal size of orifice plate

DIN/EN

	Nominal size, up to														
DN	**50**	**65**	**80**	**100**	**125**	**150**	**175**	**200**	**250**	**300**	**350**	**400**	**450**	**500**	**600**
mm	3	3	4	4	4	4	4	4	4	4	4	4	4	6	6

ASME

	Nominal size, up to														
DN	**2"**	**2.5"**	**3"**	**4"**	**5"**	**6"**	**7"**	**8"**	**10"**	**12"**	**14"**	**16"**	**18"**	**20"**	**22"**	**24"**
mm	3	3	3	3	3	3	6	6	6	6	6	10	10	10	12	12

*) Not standardized in DIN standard.

Up to DN 50 adjusted for general practice. Nominal size designed for a differential pressure of up to 1000 mbar.

© Siemens 2021

Orifice plate with orifice flange according to ASME B16.36

Application

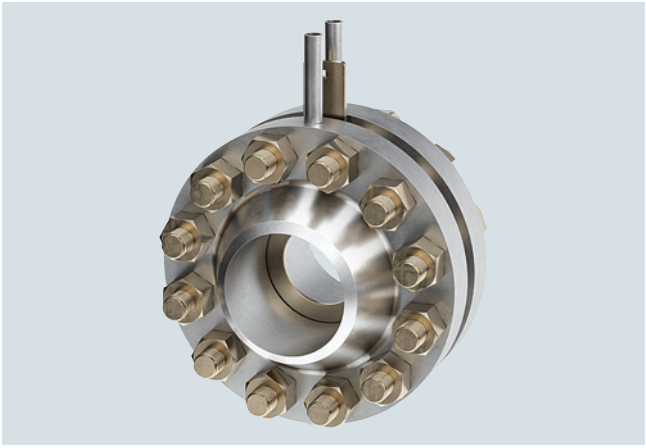

SITRANS FPS200 remote design

Orifice flange pair according to ASME B36.16 with orifice plate in carbon steel (flanges) or stainless steel for flow measurement of gas and liquid.

Design

The orifice plate is mounted between traditional orifice flanges according to ASME B16.36. The orifice flanges are manufactured with integral pressure tappings. System design is always remote. The orifice plate can be exchanged. The flanges have to be welded into the pipe.

- Design of orifice plate, see Orifice plates

Differential pressure tapping

- In the flange: Differential pressure tapping in special measuring flanges with integrated connectors in the flange, always remote

Tapping sockets

- 0°

Connection length

- For gases and liquids suitable for up to approx. 80 mm pipe insulation

Sealing face

- According to ASME B16.5: flat

Materials

- Flange carbon steel, plate 316L
- Flange and plate 316L

Gaskets

- Spiral graphite

© Siemens 2021

Orifice plate with orifice flange according to ASME B16.36

Selection and ordering data

Selection and Ordering data ↗	Article No. 7ME175 ■ - ■ ■ ■ ■ 0 - ■ ■ ■ ■
↗ Click on the Article No. for the online configuration in the PIA Life Cycle Portal.	
Communication	
HART (4 ... 20 mA)	0
Without transmitter	8
Nominal size	
DN 50 (2“)	1 D
DN 65 (2½“)	1 E
DN 80 (3“)	1 F
DN 100 (4“)	2 G
DN 125 (5“)	2 H
DN 150 (6“)	2 J
DN 200 (8“)	2 K
DN 250 (10“)	2 L
DN 300 (12“)	2 M
DN 350 (14“)	2 N
DN 400 (16“)	2 P
DN 450 (18“)	2 Q
DN 500 (20“)	2 R
DN 600 (24“)	2 S
Nominal pressure	
Flange ASME B16.5 Class 300	R
Flange ASME B16.5 Class 600	S
Wetted parts material	
Flanges: Carbon steel / orifice plate: 316L/1.4404	7
Flanges: 316L/1.4404 / orifice plate: 316L/1.4404	8
System design	
Remote design for dry gases	4
Remote design for liquids	5
Remote design for wet gases	6
Type of protection of pressure transmitter	
No Ex / without pressure tranmitter	A
Intrinsic safety	B
Explosion proof	C
Intrinsic safety, Explosion proof	D
Dust ignition proof zone 21/22 (DIP), increased safety zone 2	L
Dust ignition proof zone 20/21/22 (DIP), increased safety zone 2	M
Intrinsic safety, Explosion proof, Dust ignition proof zone 21/22 (DIP), increased safety zone 2	S
Intrinsic safety, Explosion proof, Dust ignition proof zone 21/22 (DIP), increased safety zone 2, class division	T
Electrical connections/cable entries of pressure transmitter	
Without pressure transmitter	A
2 x M20 x 1.5	F
2 x 1/2-14 NPT	M
Local operation/display of pressure transmitter	
Without display (closed lid) / without pressure tranmitter	0
With display (closed lid)	1
With display (lid with glass window)	2

© Siemens 2021

Selection and ordering data	Order code
*Further designs**	
Please add "**-Z**" to Article No. and specify Order code(s) and plain text.	
Certificates of primary element incl. manifolds	
Inspection certificate of the primary element (EN 10204-3.1) - material of pressure-containing and wetted parts	**C52**
Factory certificate of the primary element (EN 10204-2.2) - wetted parts (MR 0175-2015)	**C54**
Dimensional record of the primary element	**C55**
Dimensional drawing 1:1 DWG of the primary element	**C59**
Maximum measuring span of pressure transmitter	
20 mbar (8.037 inH_2O)	**I01**
60 mbar (24.11 inH_2O)	**I02**
250 mbar (100.5 inH_2O)	**I03**
600 mbar (241.1 inH_2O)	**I04**
1600 mbar (643 inH_2O)	**I05**
Shut-off valves	
With mounted shut-off valves DN8 made of carbon steel, up to 300 °C with tube fitting 12 mm	**T50**
With mounted shut-off valves DN8 made of stainless steel, up to 300 °C with tube fitting 12 mm	**T51**
Valve manifolds for mounting on primary element	
With enclosed manifold (3-fold) made of stainless steel, PTFE sealings, cadmium-plated steel screws with tube fitting 12 mm	**U50**
With enclosed manifold (3-fold) made of stainless steel, PTFE sealings, stainless steel screws with tube fitting 12 mm	**U51**
With enclosed manifold (5-fold) made of stainless steel, PTFE sealings, cadmium-plated steel screws with tube fitting 12 mm	**U52**
With enclosed manifold (5-fold) made of stainless steel, PTFE sealings, stainless steel screws with tube fitting 12 mm	**U53**
Application data	
ID number of the primary element according to sizing tool	**Y40**

* For further options, please refer to SITRANS P320.

Scope of delivery

- Orifice plate
- Orifice flanges according to ASME B16.36 with pressure tappings
- 2x Gaskets for orifice flanges
- Screws and nuts
- Shut-off valves for remote design (options T5x selected in PIA)
- Manifold for compact/remote design (options U4x, U5x selected in PIA)

© Siemens 2021

Orifice plate with orifice flange according to ASME B16.36

Dimensional drawings

Overall length

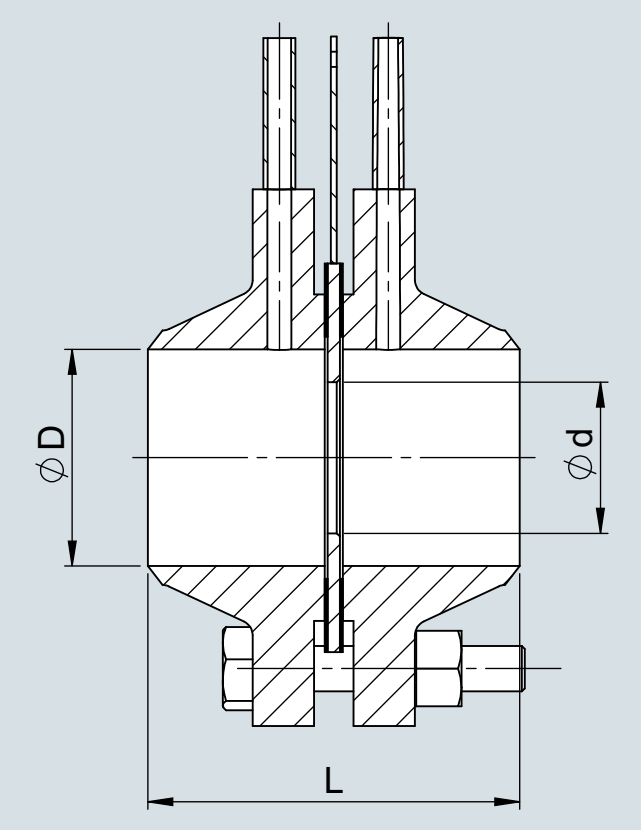

DN/Inch	PN/lbs	L	Hex nut bolt	Bolts (pcs.)	Gasket
24	600	433.10	1 7/8	24	2.0
20	600	407.70	1 5/8	24	2.0
18	600	395.00	1 5/8	20	2.0
16	600	382.30	1 1/2	20	2.0
14	600	352.90	1 3/8	20	2.0
12	600	333.60	1 1/4	20	2.0
10	600	327.50	1 1/4	16	2.0
8	600	286.40	1 1/8	12	2.0
6	600	254.40	1	12	2.0
4	600	222.90	7/8	8	2.0
3	600	184.80	3/4	8	2.0
2 1/2	600	184.80	3/4	8	2.0
2	600	178.70	5/8	8	2.0
24	300	350.30	1 1/2	24	2.0
20	300	338.10	1 1/4	24	2.0
18	300	331.50	1 1/4	24	2.0
16	300	306.10	1 1/4	20	2.0
14	300	295.50	1 1/8	20	2.0
12	300	270.10	1 1/8	16	2.0
10	300	244.70	1	16	2.0
8	300	229.50	7/8	12	2.0
6	300	207.16	3/4	12	2.0
4	300	190.90	3/4	8	2.0
3	300	184.80	3/4	8	2.0
2 1/2	300	184.80	3/4	8	2.0
2	300	178.70	5/8	4	2.0

Nominal size of orifice plate

DIN/EN

	Nominal size, up to													
DN	50	65	80	100	125	150	175	200	250	300	350	400	450	500	600
mm	3	3	4	4	4	4	4	4	4	4	4	4	4	6	6

ASME

	Nominal size, up to														
DN	2"	2.5 "	3"	4"	5"	6"	7"	8"	10"	12"	14"	16"	18"	20"	22"	24"
mm	3	3	3	3	3	3	6	6	6	6	6	10	10	10	12	12

Nominal size designed for a differential pressure of up to 1 000 mbar.

The specified dimensions are approximate dimensions, exact dimensions depend on the gasket used.

© Siemens 2021

Overview



Due to the robust technology and the simple principle of measurement, averaging pitot tubes can be used in many different ways even under difficult conditions and offer considerable advantages over other measuring technology from easy installation to long-term measuring stability.

Further special advantages are the possibilities of bidirectional flow measurement as well as the integration of temperature and pressure measurement.

Benefits

- Easy to retrofit (no rebuilding of the pipe)
- Easy to install
- Good for large nominal sizes
- Wide range of application (media, nominal sizes, process conditions)
- Minor measurement inaccuracy
- Special designs possible for special applications
- Also work in rectangular ducts and pipes

Application

- Technical Gases
- Compressed Air
- Exhaust Air
- Fresh and Combustion Air
- Heat Transfer Fluids
- Water
- Exhaust Gas
- Steam/Heat Quantities

Design

Basics: Averaging pitot tubes for flow measurement

- Mounting by insertion into the pipe (no flange-to-flange instrument)
- Differential pressure generation through forced flow
- Variation of the classic "pitot tube" through multiple metering orifices (so-called "averaging pitot tube")
- Design follows manufacturer guidelines, not standardized

Designs

- Averaging Pitot Tube for gas and liquids (7ME161)
- Averaging Pitot Tube for steam (7ME162)
- Averaging Pitot Tube with FASTLOK (7ME163), to remove sensor during operation without interruption of process

System design

- Compact design for dry gases and liquids without integrated temperature measurement
- Compact design for wet gases with or without integrated temperature measurement as well as for dry gases and liquids with integrated temperature measurement
- Compact design for steam with or without integrated temperature measurement
- Remote design for dry or wet gases, liquids and steam

Function

Design of the averaging pitot tube

Similar to other differential pressure devices averaging pitot tubes create a differential pressure to measure flow. They are not specified in the general standard ISO 5167, but they follow the same technical principle. In contrast to the classic differential pressure sensors, averaging pitot tube sensors are not "inline" devices but consist of a "profile" that is inserted into the side of the pipeline.

Differential pressure is created when fluid flows around the profile of the averaging pitot tube. Since the constriction of the pipeline by the profile in relation to the cross-sectional area is much smaller than, for example, with an orifice plate, the created differential pressure and the respective permanent pressure drop are smaller.

The flow comes to a complete stop at the upstream side of the averaging pitot tube creating the upstream pressure. At the downstream side a negative pressure is created by the so-called Kármán vortex street. The differential pressure (difference between upstream pressure and negative pressure) is the measurement signal and is proportional to the flow rate. This results in the following basic formula for flow measurement with averaging pitot tubes: $q_m = A \bullet k \bullet \sqrt{(2 \bullet \Delta p \bullet \rho)}$

q_m: mass flow

A: cross-sectional area of the pipe

k: device factor of the pitot tube

Δp: differential pressure

ρ: density

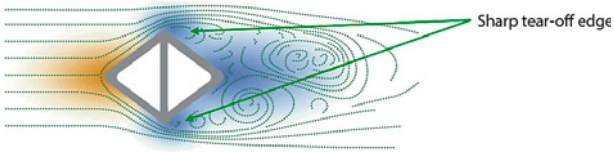

The k-factor is the device factor of the averaging pitot tube and is determined, among other things, by the shape of the profile of the pitot tube. Thanks to the sharp-edged shape of the profile, it remains constant over a very wide Reynolds number range and enables linear flow measurement.

The averaging pitot tube features the same number of measuring openings on the front and back. The special distribution of the measuring openings over the cross section allows geometric averaging in case of uneven flow distribution and thus an accurate measurement even with very short inlet and outlet distances. The generated upstream and downstream pressures are averaged in the respective chambers and routed to the differential pressure transmitter.

© Siemens 2021

Technical specifications

General design	
Working principle	Multi-port averaging pitot tube for round and rectangular pipes
Media	• Steam (saturated, superheated) • Gas (dry, up to 100% water saturated) (automatic purging unit for high dust applications on request) • Liquids (water, non-conductive liquids, oil, etc.)
Transmitter installation	• Compact mount with differential pressure transmitter • Remote mounted differential pressure transmitter
Bidirectional flow	Yes (symmetric sensor design)
Calculation	According to manufacturer standard
Accuracy	
Linearity (of Sensor k-Factor)	Re > 20.000: 1%
Repeatability (of Sensor k-Factor)	Re > 20.000: 0,1%
Measurement range	Typically, up to 1:10 (real measurement range depends on transmitter performance)
Operating Conditions	
Pressure	Flange: Max. PN 100 Cutting Ring: Max. PN 40 (max. 180 °C) FASTLOK: Max. PN 16 (max. 180 °C) (Higher pressure ratings on request)
Temperature	Stainless Steel sensor: -100 ... 500 °C 16Mo3: -20 ... 530 °C Hastelloy: -20 ... 700 °C (exact maximum temperature depends on sensor design, feasibility will be calculated by sizing tool)
Pressure loss	generally, <10 % of differential pressure
Installation conditions	
Straight inlet diameter	7x Inner diameter behind 90 ° elbow
Straight outlet diameter	3x Inner diameter (for detailed calculation of recommended installation pipe length please refer to sizing tool or manual)
Design	
Material sensor	Standard: Stainless steel 1.4404/ AISI 316L Optional: 1.5415/16Mo3, Hastelloy C22 (other materials on request)
Diameter	40 ... 4000 mm (larger sensors on request)
Material mounting parts	Standard: Carbon Steel Optional: Stainless Steel 1.4404 / AISI 316L (other materials on request)
Process connection	Flange EN 1092-1 B1 Flange ASME B16.5 RF Cutting Ring Fitting FASTLOK (retractable design) (other process connections on request)
Thickness of pipe insulation	0 ... 200 mm
Approvals	
Hazardous area	(see differential pressure transmitter)
Enclosure rating	(see differential pressure transmitter)
Operational safety	(see differential pressure transmitter)
QAL1, SIRA	

Options

Further versions that are available on request:

- Weld-in sensor for high pressure steam
- Calibrated metering pipes
- FASTLOK with flange ball valve
- Etc.

More information

For more information please see the Installation Instructions and the Instruction Manuals SITRANS P on SIOS.

© Siemens 2021

Application



SITRANS FP330 compact design



SITRANS FPS300 remote design

These sensors are using the averaging pitot tube technology and can be used wherever flow rates of gases or liquids are to be measured.

© Siemens 2021

Averaging pitot tube for gas and liquids

Design

Mounting type

- Flange, cutting ring (carbon steel, stainless steel)

The averaging pitot tube can be mounted to pipes and ducts either with a traditional flange or a cutting ring fitting:

Flange mounting

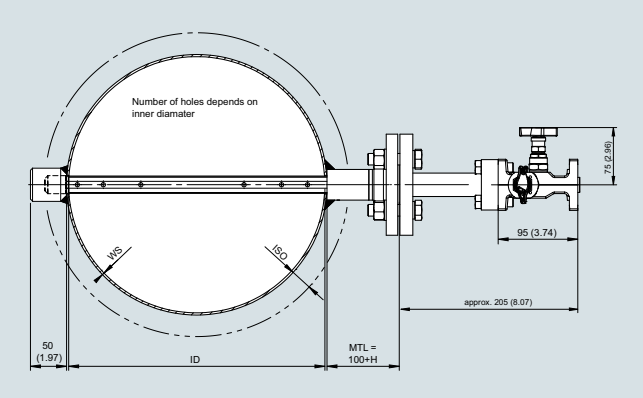

Cutting ring mounting

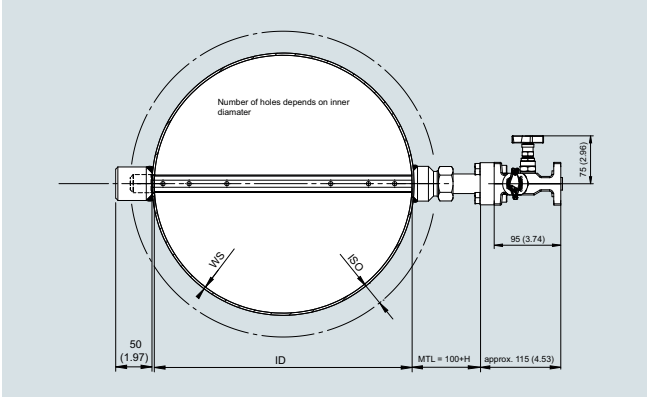

The required mounting components are always supplied together with the averaging pitot tube.

Flange mounting style can be applied to a large range of applications and is widely accepted. Cutting ring mounting style has a limited temperature and pressure range (see max. pressure and max. temperature below) but provides an economic alternative for simple flow measurement applications.

Dimensions of mounting parts

Flange	Profile 10	Profile 22	Profile 32	Profile 50
PN 16	(min. PN 40)	(min. PN 40)	(min. PN 40)	DN 80
PN 40	DN 15	DN 32	DN 40	On request
PN 100	DN 25	DN 40	DN 40	On request
Class 150	½“	1 ¼“	1 ½“	3“
Class 300	½“	1 ¼“	1 ½“	On request
Class 600	1“	1 ½“	1 ½“	On request

Cutting ring	Profile 10	Profile 22
PN 40	M22	M36

Standard lengths of mounting parts (MTL)

Profile 10	Profile 22	Profile 32	Profile 50
80 mm	100 mm	100 mm	120 mm

Mounting part length can be increased based on thermal pipe insulation in 50 mm steps (H).

© Siemens 2021

Design (continued)

System design of differential pressure connection

The differential pressure transmitter can be installed in compact design (at the averaging pitot tube) or in remote design.

Gas and liquid application, compact design

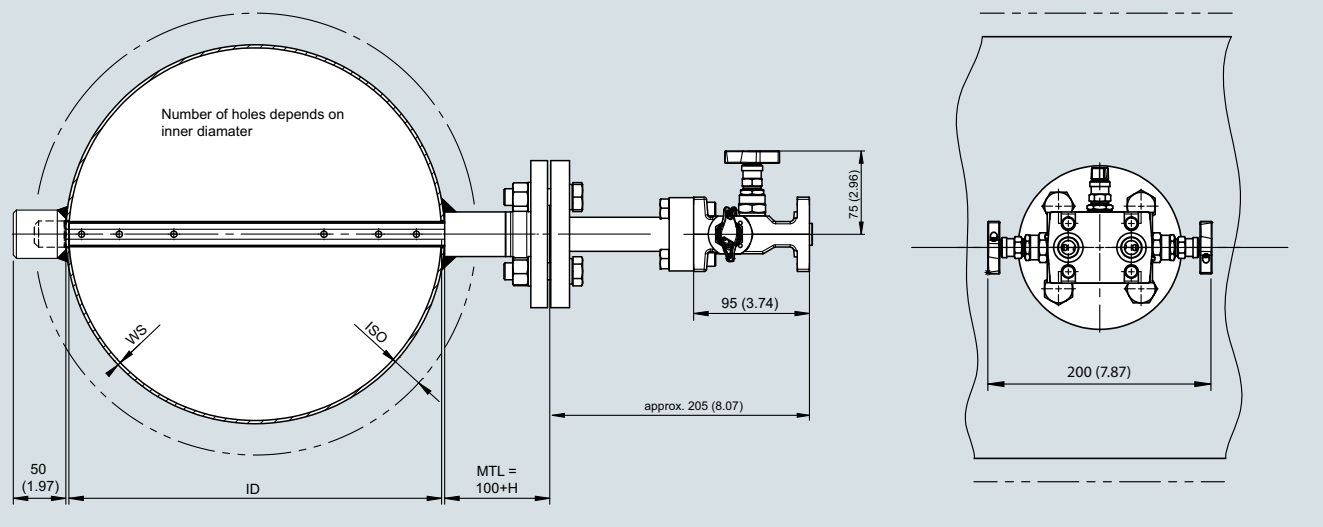

For gas and liquid applications with compact design the averaging pitot tube sensor is equipped with a traditional flange plate to mount manifold and differential pressure transmitter directly at the sensor.

Gas and liquid application, remote design

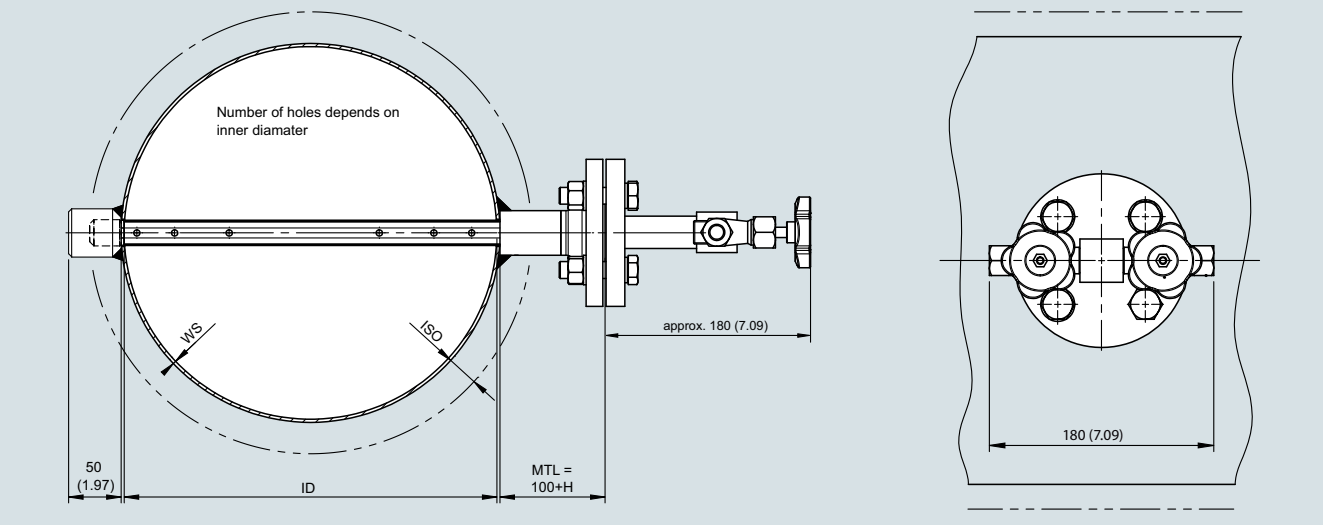

For gas and liquid applications with remote design the averaging pitot tube sensor is equipped with valves mounted directly to the sensor. Impulse pressure piping (not supplied) has to be installed from the valves to the remote mounted manifold and differential pressure transmitter.

© Siemens 2021

Averaging pitot tube for gas and liquids

Design (continued)

Gas and liquid application, compact design for wet gases and/or with integrated temperature measurement with PT100

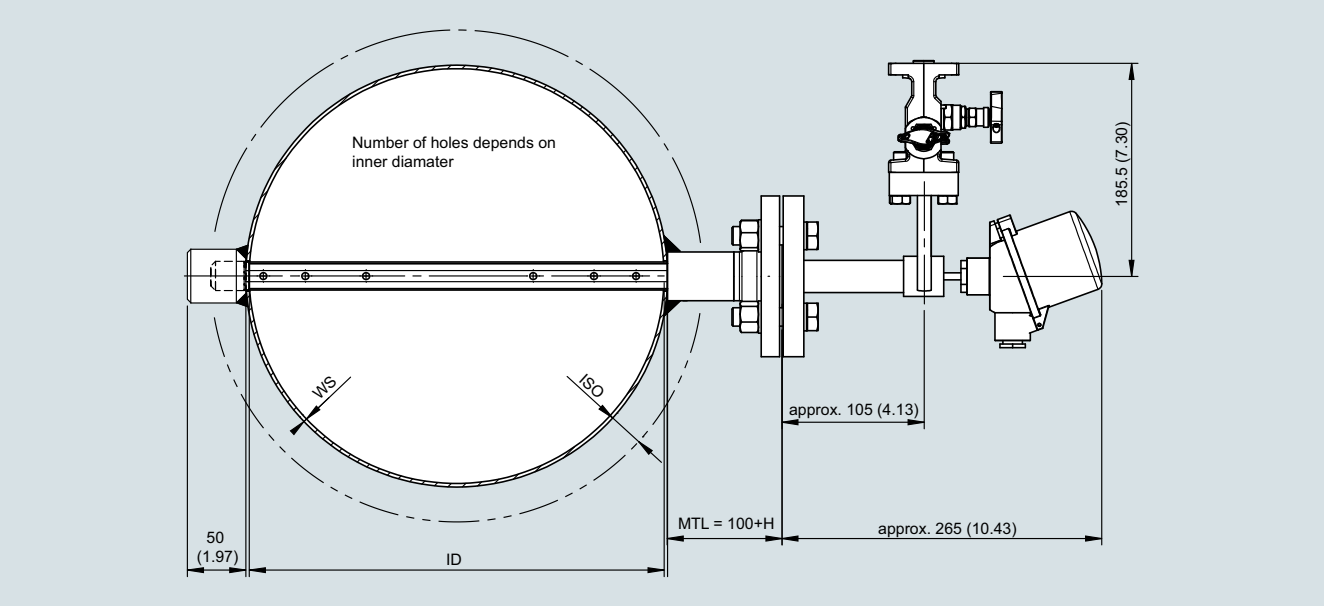

The averaging pitot tube sensor is equipped with a 90° rotated flange plate to mount manifold and differential pressure transmitter directly at the sensor. The rotated flange plate serves the purpose of providing space for the integrated temperature measurement and will also allow condensed water of wet gases to flow back from the outside assembly into the averaging pitot tube. This is particularly useful for installations in vertical pipes, or in horizontal pipes where the averaging pitot tube has to be mounted from the side. If the pitot tube can be mounted from the top, a regular flange plate is sufficient.

Averaging pitot tube materials

- Standard: 1.4404/316L
- Option: Hastelloy C-22

Mounting parts materials

- Carbon steel, 1.4404/316L

Flange gaskets

- Up to PN 40: Klingersil C4400
- As of PN 63: graphite with stainless steel insert

Integrated temperature measurement using PT100

- Can be integrated in averaging pilot tube (> DN 100, only 1.4404, ≤ PN 40)

Max. pressure

- EN: up to PN 100 (for flange), PN 40 (for cutting ring)
- ASME: up to Class 600 (for flange)

Max. temperature

- Mounting parts:
  - Flange: according to EN 1092-1 or ASME B16.5
  - Cutting ring: 200 °C (carbon steel), 400 °C (stainless steel)
- Sensor: will be calculated by sizing tool

© Siemens 2021

Selection and ordering data

	Article No.											
SITRANS FP330/FPS300 averaging pitot tube for gas and liquids ↗	**7ME161**	■	-	■	■	■	■	-	■	■	■	■
↗ Click on the Article No. for the online configuration in the PIA Life Cycle Portal.												
Communication												
HART (4 ... 20 mA)		**0**										
Without transmitter		**8**										
Nominal size/Sensor type (according to sizing tool)												
DN 40/Sensor type 10				**1**	**C**							
DN 50/Sensor type 10				**1**	**D**							
DN 65/Sensor type 10				**1**	**E**							
DN 80/Sensor type 10				**1**	**F**							
DN 100/Sensor type 10				**1**	**G**							
DN 125/Sensor type 10				**1**	**H**							
DN 100/Sensor type 22				**2**	**G**							
DN 125/Sensor type 22				**2**	**H**							
DN 150/Sensor type 22				**2**	**J**							
DN 200/Sensor type 22				**2**	**K**							
DN 250/Sensor type 22				**2**	**L**							
DN 300/Sensor type 22				**2**	**M**							
DN 350/Sensor type 22				**2**	**N**							
DN 400/Sensor type 22				**2**	**P**							
DN 450/Sensor type 22				**2**	**Q**							
DN 500/Sensor type 22				**2**	**R**							
DN 600/Sensor type 22				**2**	**S**							
DN 700/Sensor type 22				**2**	**T**							
DN 800/Sensor type 22				**2**	**U**							
DN 900/Sensor type 22				**2**	**V**							
DN 1000/Sensor type 22				**2**	**W**							
DN 1100/Sensor type 22				**2**	**X**							
DN 1200/Sensor type 22				**2**	**Y**							
DN 300/Sensor type 32				**3**	**M**							
DN 350/Sensor type 32				**3**	**N**							
DN 400/Sensor type 32				**3**	**P**							
DN 450/Sensor type 32				**3**	**Q**							
DN 500/Sensor type 32				**3**	**R**							
DN 600/Sensor type 32				**3**	**S**							
DN 700/Sensor type 32				**3**	**T**							
DN 800/Sensor type 32				**3**	**U**							
DN 900/Sensor type 32				**3**	**V**							
DN 1000/Sensor type 32				**3**	**W**							
DN 1100/Sensor type 32				**3**	**X**							
DN 1200/Sensor type 32				**3**	**Y**							
DN 1400/Sensor type 32				**4**	**A**							
DN 1500/Sensor type 32				**4**	**B**							
DN 1600/Sensor type 32				**4**	**C**							
DN 1800/Sensor type 32				**4**	**D**							
DN 2000/Sensor type 32				**4**	**E**							
DN 2200/Sensor type 32				**4**	**F**							
DN 2400/Sensor type 32				**4**	**G**							
DN 500/Sensor type 50				**5**	**R**							
DN 600/Sensor type 50				**5**	**S**							
DN 700/Sensor type 50				**5**	**T**							
DN 800/Sensor type 50				**5**	**U**							
DN 900/Sensor type 50				**5**	**V**							
DN 1000/Sensor type 50				**5**	**W**							

© Siemens 2021

Averaging pitot tube for gas and liquids

Selection and ordering data

	Article No.												
SITRANS FP330/FPS300 averaging pitot tube for gas and liquids	**7ME161**	■	-	■	■	■	■	-	■	■	■	■	
DN 1100/Sensor type 50				**5**	**X**								
DN 1200/Sensor type 50				**5**	**Y**								
DN 1400/Sensor type 50				**6**	**A**								
DN 1500/Sensor type 50				**6**	**B**								
DN 1600/Sensor type 50				**6**	**C**								
DN 1800/Sensor type 50				**6**	**D**								
DN 2000/Sensor type 50				**6**	**E**								
DN 2200/Sensor type 50				**6**	**F**								
DN 2400/Sensor type 50				**6**	**G**								
DN 2600/Sensor type 50				**6**	**H**								
DN 2800/Sensor type 50				**6**	**J**								
DN 3000/Sensor type 50				**6**	**K**								
DN 3200/Sensor type 50				**6**	**L**								
DN 3400/Sensor type 50				**6**	**M**								
DN 3600/Sensor type 50				**6**	**N**								
DN 3800/Sensor type 50				**6**	**P**								
DN 4000/Sensor type 50				**6**	**Q**								
Process connection/wetted parts material													
Flange EN 1092-1 Form B1, PN16/stainless steel 316L/1.4404						**C**							
Flange EN 1092-1 Form B1, PN40/stainless steel 316L/1.4404						**E**							
Flange EN 1092-1 Form B1, PN64/100/stainless steel 316L/1.4404						**F**							
Flange EN 1092-1 Form B1, PN160/stainless steel 316L/1.4404						**H**							
Flange EN 1092-1 Form B1, PN16/alloy C22 (up to max. 0.5 bar g)						**L**							
Flange EN 1092-1 Form B1, PN40/alloy C22 (up to max. 0.5 bar g)						**M**							
Cutting ring PN40/stainless steel 316L/1.4404						**N**							
Flange ASME B16.5, Class 150 RF/stainless steel 316L/1.4404						**Q**							
Flange ASME B16.5, Class 300 RF/stainless steel 316L/1.4404						**R**							
Flange ASME B16.5, Class 600 RF/stainless steel 316L/1.4404						**S**							
Flange ASME B16.5, Class 900 RF/stainless steel 316L/1.4404						**T**							
Flange ASME B16.5, Class 150 RF/alloy C22 (up to max. 0.5 bar g)						**W**							
Material of welding parts/type of end support													
Carbon steel P235GH/without end support							**0**						
Stainless steel 316L/1.4404 / without end support							**1**						
Heat-resistant steel 16Mo3/1.5415 / without end support							**2**						
Carbon steel P235GH mounting components with closed end support							**3**						
Stainless steel 316L/1.4404 / closed end support							**4**						
Heat-resistant steel 16Mo3/1.5415 / closed end support							**5**						
Carbon steel P235GH/end support with flange							**6**						
Stainless steel 316L/1.4404 / end support with flange							**7**						
Thickness of pipe insulation													
Pipe insulation: 0 ... < 50 mm								**0**					
Pipe insulation: 500 ... < 100 mm								**1**					
Pipe insulation: 1000 ... < 150 mm								**2**					
Pipe insulation: 1500 ... < 200 mm								**3**					
System design													
Compact design for dry gases and liquids without integrated temperature measurement									**0**				
Compact design for wet gases with or without integrated temperature measurement as well as for dry gases and liquids with integrated temperature measurement									**1**				
Remote design for dry gases, wet gases and liquids									**3**				
Type of protection of pressure transmitter													
No Ex/without pressure tranmitter										**A**			
Intrinsic safety										**B**			
Explosion proof										**C**			
Intrinsic safety, Explosion proof										**D**			
Dust ignition proof zone 21/22 (DIP), increased safety zone 2										**L**			

© Siemens 2021

Selection and ordering data

	Article No.
SITRANS FP330/FPS300 averaging pitot tube for gas and liquids	**7ME161 ■ - ■ ■ ■ ■ ■ - ■ ■ ■ ■**
Dust ignition proof zone 20/21/22 (DIP), increased safety zone 2	**M**
Intrinsic safety, Explosion proof, Dust ignition proof zone 21/22 (DIP), increased safety zone 2	**S**
Intrinsic safety, Explosion proof, Dust ignition proof zone 21/22 (DIP), increased safety zone 2, class division	**T**
Electrical connections/cable entries of pressure transmitter	
Without pressure transmitter	**A**
2 x M20 x 1.5	**F**
2 x 1/2-14 NPT	**M**
Local operation/display of pressure transmitter	
Without display (closed lid)/without pressure tranmitter	**0**
With display (closed lid)	**1**
With display (lid with glass window)	**2**

Selection and ordering data

	Order code
*Further designs**	
Please add "**-Z**" to Article No. and specify Order code(s) and plain text.	
Certificates of primary element incl. fittings	
Inspection certificate of the primary element (EN 10204-3.1) - material of pressure-containing and wetted parts	**C52**
Factory certificate of the primary element (EN 10204-2.2) - wetted parts (MR 0175-2015)	**C54**
Dimensional record of the primary element	**C55**
Inspection certificate (DIN EN 571-1) - dye penetration test of weldings	**C56**
Hydrostatic pressure test of the primary element (EN 13480-5)	**C58**
Dimensional drawing 1:1 DWG of the primary element	**C59**
Maximum measuring span of pressure transmitter	
20 mbar (8.037 inH_2O)	**I01**
60 mbar (24.11 inH_2O)	**I02**
250 mbar (100.5 inH_2O)	**I03**
600 mbar (241.1 inH_2O)	**I04**
1600 mbar (643 inH_2O)	**I05**
Integrated temperature measurement	
Integrated temperature measurement with Pt100; cl. A; 3-wire; without head transmitter	**S01**
Integrated temperature measurement with Pt100; cl. A; 3-wire; ATEX II 1/2G Ex ia IIC T5 Ga/Gb; without head transmitter	**S02**
Integrated temperature measurement with Pt100; cl. A; 3-wire; incl. Head transmitter TH320, General Purpose (non Ex) (CE, RCM, FM, CSA) (7NG0310-0BA00-0AA0)	**S03**
Integrated temperature measurement with Pt100; cl. A; 3-wire; ATEX II 1/2G Ex ia IIC T5 Ga/Gb; incl. Head transmitter TH320, Ex i,Ex nA (ec)(Ex-Zone)/IS, NIFW, NI (Class-Div) (ATEX, IECEx, CSA, FM, NEPSI) (7NG0310-0BA00-0NA0)	**S04**
Shut-off valves	
With mounted shut-off valves DN8 made of carbon steel, up to 300 °C with tube fitting 12 mm	**T50**
With mounted shut-off valves DN8 made of stainless steel, up to 300 °C with tube fitting 12 mm	**T51**
With mounted ball valve made of stainless steel, up to 200 °C with tube fitting 12 mm	**T59**
Valve manifolds for mounting on primary element	
With mounted manifold (3-fold) made of stainless steel, PTFE sealings, cadmium-plated steel screws	**U40**

	Order code
*Further designs**	
Please add "**-Z**" to Article No. and specify Order code(s) and plain text.	
With mounted manifold (3-fold) made of stainless steel, PTFE sealings, stainless steel screws	**U41**
With mounted manifold (5-fold) made of stainless steel, PTFE sealings, cadmium-plated steel screws	**U42**
With mounted manifold (5-fold) made of stainless steel, PTFE sealings, stainless steel screws	**U43**
With mounted multi-way cock made of stainless steel, PTFE sealings, cadmium-plated steel screws	**U44**
With mounted multi-way cock made of stainless steel, PTFE sealings, stainless steel screws	**U45**
With enclosed manifold (3-fold) made of stainless steel, PTFE sealings, cadmium-plated steel screws with tube fitting 12 mm	**U50**
With enclosed manifold (3-fold) made of stainless steel, PTFE sealings, stainless steel screws with tube fitting 12 mm	**U51**
With enclosed manifold (5-fold) made of stainless steel, PTFE sealings, cadmium-plated steel screws with tube fitting 12 mm	**U52**
With enclosed manifold (5-fold) made of stainless steel, PTFE sealings, stainless steel screws with tube fitting 12 mm	**U53**
With enclosed multi-way cock made of stainless steel, PTFE sealings, cadmium-plated steel screws with tube fitting 12 mm	**U54**
With enclosed multi-way cock made of stainless steel, PTFE sealings, stainless steel screws with tube fitting 12 mm	**U55**
Application data	
ID number of the primary element according to sizing tool	**Y40**
Measuring range setting (temperature transmitter): lower range value (max. 5 characters), upper range value (max. 5 characters), unit (C, F)	**Y41**

* For further options, please refer to SITRANS P320.

Scope of delivery

- Averaging pitot tube with differential pressure connections
- Mounting part:
  - Flanged installation: Flanged mounting part including gasket, screws and nuts.
  - Cutting ring installation: Welding socket, cutting ring, nut
- If necessary: closed counter support
- Shut-off valves for remote design (options T5x selected in PIA)
- Manifold for compact/remote design (options U4x, U5x selected in PIA)

© Siemens 2021

Averaging pitot tube for steam

Application

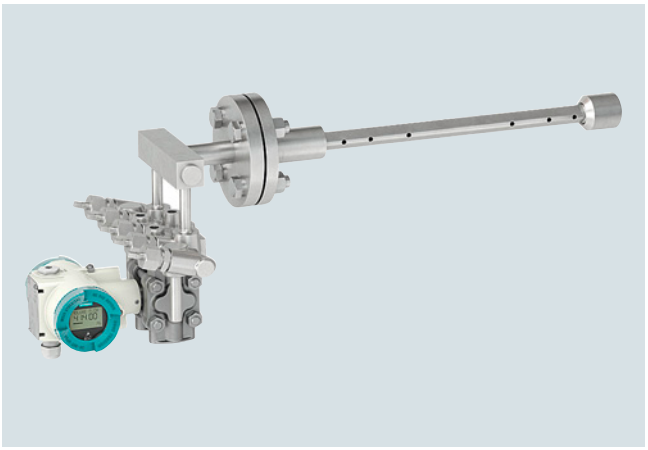

SITRANS FP330 compact design

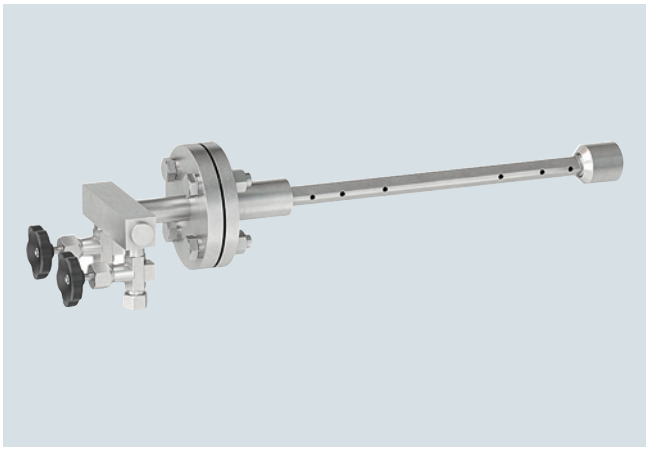

SITRANS FPS300 remote design

These sensors for steam probes are used wherever flow of superheated or saturated steam is to be measured.

Design

Mounting type

The averaging pitot tube for steam can be mounted to pipes with a traditional flange:

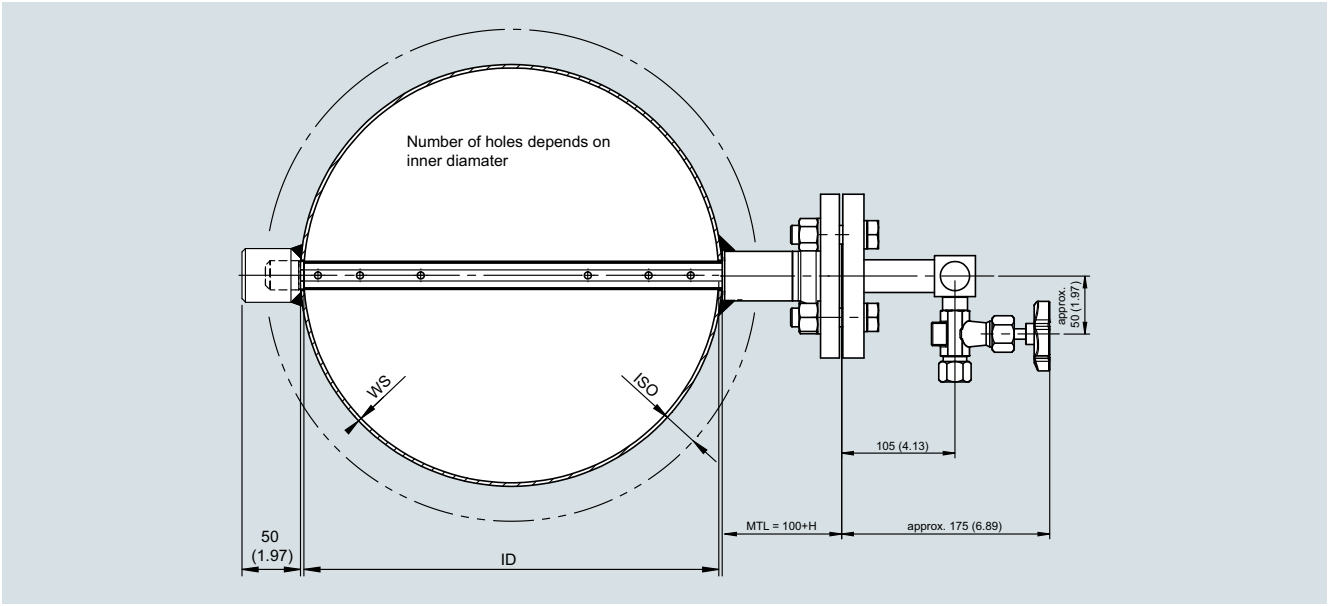

Dimensions of mounting parts

Flange	Profile 10	Profile 22	Profile 32
PN40	DN 15	DN 32	DN 40
PN100	DN 25	DN 40	DN 40
Class 150	½“	1 ¼“	1 ½“
Class 300	½“	1 ¼“	1 ½“
Class 600	1“	1 ½“	1 ½“

Standard lengths of mounting parts

Profile 10	Profile 22	Profile 32
80 mm	100 mm	100 mm

© Siemens 2021

Design (continued)

System design of differential pressure connection

The differential pressure transmitter can be installed in compact design (at the averaging pitot tube) or in remote design.

Steam applications, compact design

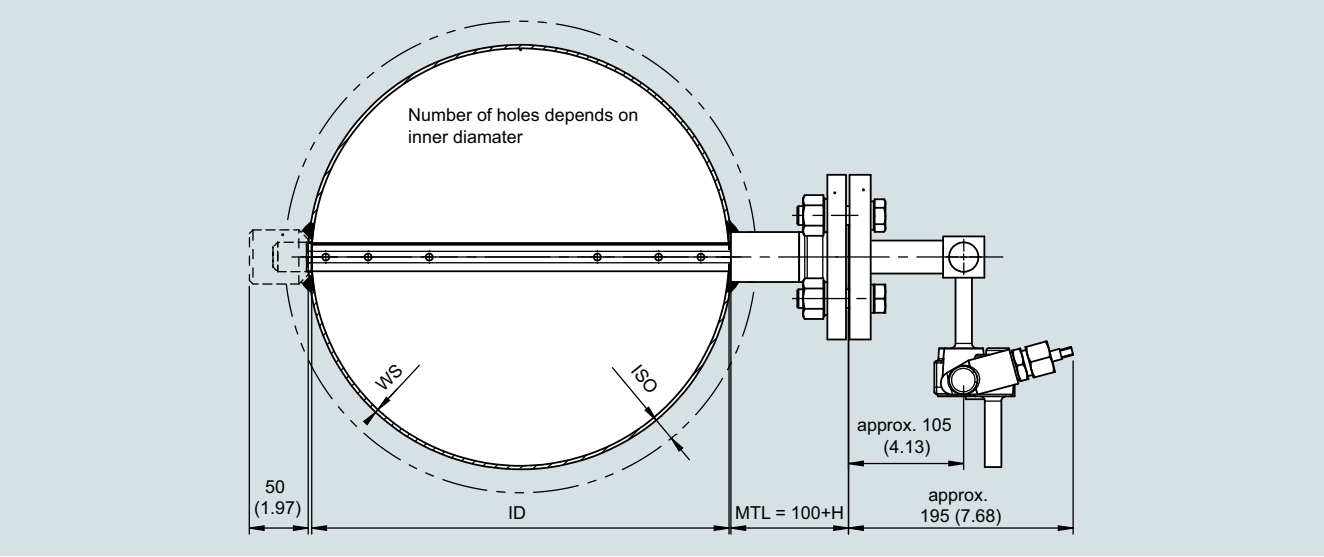

For steam applications with compact design the averaging pitot tube sensor is equipped with integrated condensation pots, a 5-way-manifold is welded directly to the sensor.

Steam applications, remote design

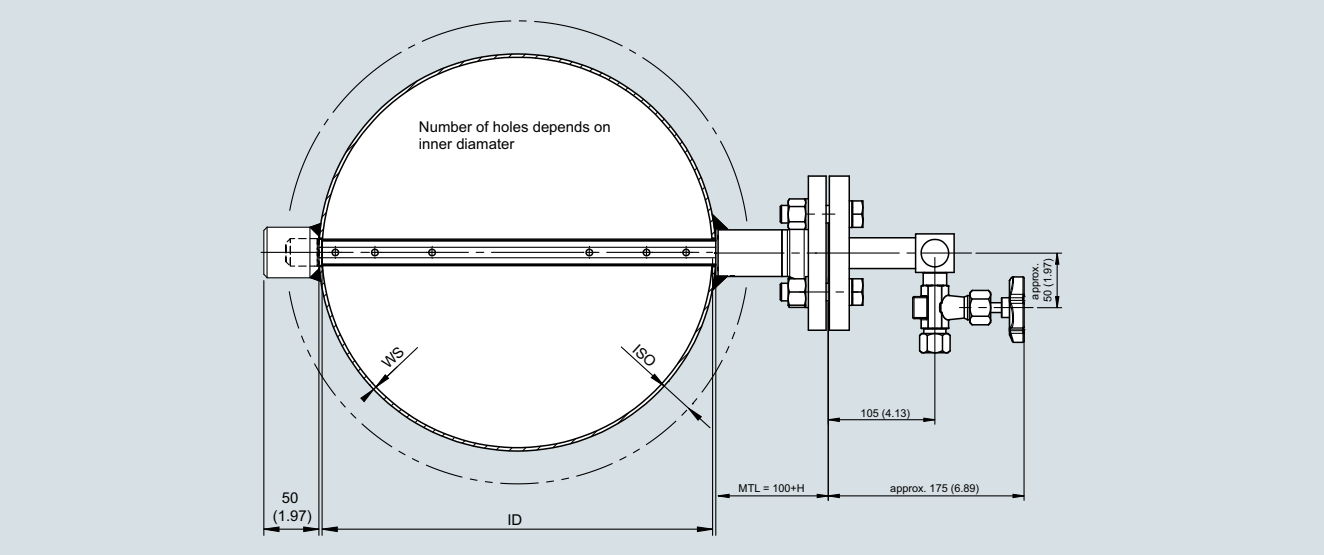

For steam applications with remote design the averaging pitot tube sensor is equipped with integrated condensation pots, valves are welded directly to the sensor. Impulse pressure piping (not supplied) has to be installed from the valves to the remote mounted manifold and differential pressure transmitter.

Profile width

- Depending on selected type

Averaging pitot tube materials

- Standard: 1.4404/316L
- Option: 16Mo3/1.5415

Mounting parts materials

- Carbon steel, 1.4404/316L

Flange gaskets

- Up to PN 40: graphite
- As of PN 63: graphite with stainless steel insert

Integrated temperature measurement using PT100

- Can be integrated in averaging pitot tube (> DN 100, only 1.4404, ≤ PN 40)

Max. pressure

- EN: up to PN 100
- ASME: up to Class 600

Max. temperature

- Mounting parts: According to EN 1092-1 or ASME B16.5
- Sensor: Will be calculated by sizing tool

© Siemens 2021

Averaging pitot tube for steam

Selection and ordering data

	Article No.											
SITRANS FP330/FPS300 averaging pitot tube for steam ↗	**7ME162**	■	-	■	■	■	0	-	■	■	■	■
↗ Click on the Article No. for the online configuration in the PIA Life Cycle Portal.												
Communication												
HART (4 ... 20 mA)		**0**										
Without transmitter		**8**										
Nominal size/Sensor type (according to sizing tool)												
DN 40/Sensor type 10				**1**	**C**							
DN 50/Sensor type 10				**1**	**D**							
DN 65/Sensor type 10				**1**	**E**							
DN 80/Sensor type 10				**1**	**F**							
DN 100/Sensor type 10				**1**	**G**							
DN 125/Sensor type 10				**1**	**H**							
DN 100/Sensor type 22				**2**	**G**							
DN 125/Sensor type 22				**2**	**H**							
DN 150/Sensor type 22				**2**	**J**							
DN 200/Sensor type 22				**2**	**K**							
DN 250/Sensor type 22				**2**	**L**							
DN 300/Sensor type 22				**2**	**M**							
DN 350/Sensor type 22				**2**	**N**							
DN 400/Sensor type 22				**2**	**P**							
DN 450/Sensor type 22				**2**	**Q**							
DN 500/Sensor type 22				**2**	**R**							
DN 600/Sensor type 22				**2**	**S**							
DN 700/Sensor type 22				**2**	**T**							
DN 800/Sensor type 22				**2**	**U**							
DN 900/Sensor type 22				**2**	**V**							
DN 1000/Sensor type 22				**2**	**W**							
DN 1100/Sensor type 22				**2**	**X**							
DN 1200/Sensor type 22				**2**	**Y**							
DN 300/Sensor type 32				**3**	**M**							
DN 350/Sensor type 32				**3**	**N**							
DN 400/Sensor type 32				**3**	**P**							
DN 450/Sensor type 32				**3**	**Q**							
DN 500/Sensor type 32				**3**	**R**							
DN 600/Sensor type 32				**3**	**S**							
DN 700/Sensor type 32				**3**	**T**							
DN 800/Sensor type 32				**3**	**U**							
DN 900/Sensor type 32				**3**	**V**							
DN 1000/Sensor type 32				**3**	**W**							
DN 1100/Sensor type 32				**3**	**X**							
DN 1200/Sensor type 32				**3**	**Y**							
DN 1400/Sensor type 32				**4**	**A**							
DN 1500/Sensor type 32				**4**	**B**							
DN 1600/Sensor type 32				**4**	**C**							
DN 1800/Sensor type 32				**4**	**D**							
DN 2000/Sensor type 32				**4**	**E**							
DN 500/Sensor type 50				**5**	**R**							
DN 600/Sensor type 50				**5**	**S**							
DN 700/Sensor type 50				**5**	**T**							
DN 800/Sensor type 50				**5**	**U**							
DN 900/Sensor type 50				**5**	**V**							
DN 1000/Sensor type 50				**5**	**W**							

© Siemens 2021

Selection and ordering data

	Article No.												
SITRANS FP330/FPS300 averaging pitot tube for steam	**7ME162**	■	**-**	■	■	■	■	**0**	**-**	■	■	■	■
DN 1100/Sensor type 50				**5**	**X**								
DN 1200/Sensor type 50				**5**	**Y**								
DN 1400/Sensor type 50				**6**	**A**								
DN 1500/Sensor type 50				**6**	**B**								
DN 1600/Sensor type 50				**6**	**C**								
DN 1800/Sensor type 50				**6**	**D**								
DN 2000/Sensor type 50				**6**	**E**								
Process connection/wetted parts material													
Flange EN 1092-1 Form B1, PN16/stainless steel 316L/1.4404						**C**							
Flange EN 1092-1 Form B1, PN40/stainless steel 316L/1.4404						**E**							
Flange EN 1092-1 Form B1, PN64/100/stainless steel 316L/1.4404						**F**							
Flange EN 1092-1 Form B1, PN160/stainless steel 316L/1.4404						**H**							
Flange EN 1092-1 Form B1, PN64/100/heat-resistant steel 16Mo3/1.5415						**J**							
Flange ASME B16.5, Class 150 RF/stainless steel 316L/1.4404						**Q**							
Flange ASME B16.5, Class 300 RF/stainless steel 316L/1.4404						**R**							
Flange ASME B16.5, Class 600 RF/stainless steel 316L/1.4404						**S**							
Flange ASME B16.5, Class 900 RF/stainless steel 316L/1.4404						**T**							
Flange ASME B16.5, Class 600 RF/heat-resistant steel 16Mo3/1.5415						**U**							
Material of welding parts/type of end support													
Carbon steel P235GH/without end support							**0**						
Stainless steel 316L/1.4404 / without end support							**1**						
Heat-resistant steel 16Mo3/1.5415 / without end support							**2**						
Carbon steel P235GH mounting components with closed end support							**3**						
Stainless steel 316L/1.4404 / closed end support							**4**						
Heat-resistant steel 16Mo3/1.5415 / closed end support							**5**						
Carbon steel P235GH/end support with flange							**6**						
Stainless steel 316L/1.4404 / end support with flange							**7**						
Thickness of pipe insulation													
Pipe insulation: 0 ... < 50 mm								**0**					
Pipe insulation: 500 ... < 100 mm								**1**					
Pipe insulation: 1000 ... < 150 mm								**2**					
Pipe insulation: 1500 ... < 200 mm								**3**					
System design													
Compact design for steam with or without integrated temperature measurement										**2**			
Remote design for dry gases, wet gases and liquids										**3**			
Type of protection of pressure transmitter													
No Ex/without pressure tranmitter											**A**		
Intrinsic safety											**B**		
Explosion proof											**C**		
Intrinsic safety, Explosion proof											**D**		
Dust ignition proof zone 21/22 (DIP), increased safety zone 2											**L**		
Dust ignition proof zone 20/21/22 (DIP), increased safety zone 2											**M**		
Intrinsic safety, Explosion proof, Dust ignition proof zone 21/22 (DIP), increased safety zone 2											**S**		
Intrinsic safety, Explosion proof, Dust ignition proof zone 21/22 (DIP), increased safety zone 2, class division											**T**		
Electrical connections/cable entries of pressure transmitter													
Without pressure transmitter												**A**	
2 x M20 x 1.5												**F**	
2 x 1/2-14 NPT												**M**	
Local operation/display of pressure transmitter													
Without display (closed lid)/without pressure tranmitter													**0**
With display (closed lid)													**1**
With display (lid with glass window)													**2**

© Siemens 2021

Averaging pitot tube for steam

Selection and ordering data	Order code
*Further designs**	
Please add "**-Z**" to Article No. and specify Order code(s) and plain text.	
Certificates of primary element incl. fittings	
Inspection certificate of the primary element (EN 10204-3.1) - material of pressure-containing and wetted parts	**C52**
Factory certificate of the primary element (EN 10204-2.2) - wetted parts (MR 0175-2015)	**C54**
Dimensional record of the primary element	**C55**
Inspection certificate (DIN EN 571-1) - dye penetration test of weldings	**C56**
Hydrostatic pressure test of the primary element (EN 13480-5)	**C58**
Dimensional drawing 1:1 DWG of the primary element	**C59**
Maximum measuring span of pressure transmitter	
20 mbar (8.037 inH_2O)	**I01**
60 mbar (24.11 inH_2O)	**I02**
250 mbar (100.5 inH_2O)	**I03**
600 mbar (241.1 inH_2O)	**I04**
1600 mbar (643 inH_2O)	**I05**
Integrated temperature measurement	
Integrated temperature measurement with Pt100; cl. A; 3-wire; without head transmitter	**S01**
Integrated temperature measurement with Pt100; cl. A; 3-wire; ATEX II 1/2G Ex ia IIC T5 Ga/Gb; without head transmitter	**S02**
Integrated temperature measurement with Pt100; cl. A; 3-wire; incl. Head transmitter TH320, General Purpose (non Ex) (CE, RCM, FM, CSA) (7NG0310-0BA00-0AA0)	**S03**
Integrated temperature measurement with Pt100; cl. A; 3-wire; ATEX II 1/2G Ex ia IIC T5 Ga/Gb; incl. Head transmitter TH320, Ex i,Ex nA (ec)(Ex-Zone)/IS, NIFW, NI (Class-Div) (ATEX, IECEx, CSA, FM, NEPSI) (7NG0310-0BA00-0NA0)	**S04**
Shut-off valves	
With mounted shut-off valves DN8 made of carbon steel, up to 300 °C with tube fitting 12 mm	**T50**
With mounted shut-off valves DN8 made of stainless steel, up to 300 °C with tube fitting 12 mm	**T51**
With mounted shut off valves DN8 made of carbon steel, up to 550 °C with butt weld end 14 x 2,5 mm	**T58**
Valve manifolds for mounting on primary element	
With mounted manifold (5-fold) made of carbon steel, up to 300 °C cadmium-plated steel screws	**U46**
With mounted manifold (5-fold) made of carbon steel, up to 550 °C cadmium-plated steel screws with butt weld end 14 x 2,5 mm	**U48**
With enclosed manifold (5-fold) made of carbon steel, up to 300 °C cadmium-plated steel screws with tube fitting 12 mm	**U56**
With enclosed manifold (5-fold) made of carbon steel, up to 550 °C cadmium-plated steel screws with butt weld end 14 x 2,5 mm	**U58**
Application data	
ID number of the primary element according to sizing tool	**Y40**
Measuring range setting (temperature transmitter): lower range value (max. 5 characters), upper range value (max. 5 characters), unit (C, F)	**Y41**

* For further options, please refer to SITRANS P320.

Scope of delivery

- Averaging pitot tube with integrated condensation pots and differential pressure connections
- Flanged mounting part including gasket, screws and nuts
- If necessary: closed counter support
- Shut-off valves for remote design (options T5x selected in PIA)
- Manifold for compact/remote design (options U4x, U5x selected in PIA)

© Siemens 2021

Application



SITRANS FP330 compact design



SITRANS FPS300 remote design

In the FASTLOK version the sensor can be assembled and disassembled into the pipe without interrupting plant operation. This pitot tube is used for dry gases, wet gases and liquids. On request it is available in different pressure ratings or with an integrated gear drive.

Design

Mounting type

The averaging pitot tube with FASTLOK mechanism is mounted with a screwed ball valve. A threaded nozzle is welded to the pipe onto which the ball valve is screwed.

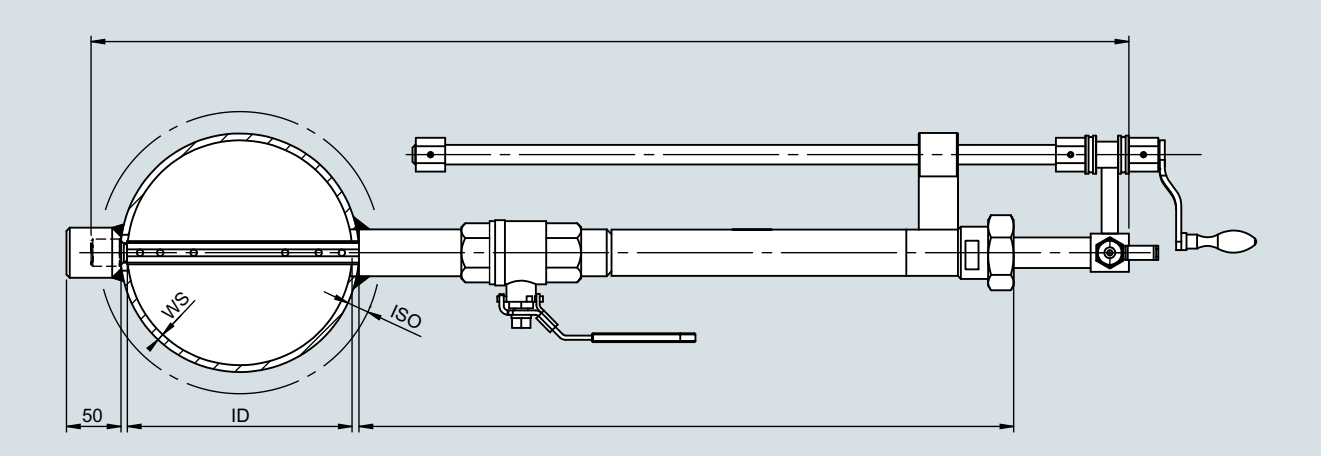

Isolation mechanism
- Ball valve with screwed-on threaded pipe with gland packing

Retraction mechanism
- The sensor is inserted or removed into/out of the pipe by turning the operating handle on top of the threaded rod. A gland packing prevents gas or liquid from exiting while the isolation ball valve is opened.

System design of differential pressure connection[1)]
- Compact, remote

Profile width
- Depending on selected type

Averaging pitot tube materials
- 1.4404/316L

Mounting parts materials
- Carbon steel, 1.4404/316L

Ball valve material
- Stainless steel 1.4404

Gasket ball valve
- PTFE

Pressure rating
- PN16

Max. temperature
- Approx. 200 °C

[1)] For details see Design under the section "Averaging pitot tube for gas and liquids" on page 3/445.

© Siemens 2021

Averaging pitot tube with FASTLOK

Selection and ordering data

	Article No.											
SITRANS FP330/FPS300 averaging pitot tube with FASTLOK ↗	**7ME163**	■	-	■	■	■	■	-	■	■	■	■
↗ Click on the Article No. for the online configuration in the PIA Life Cycle Portal.												
Communication												
HART (4 ... 20 mA)		**0**										
Without transmitter		**8**										
Nominal size/Sensor type (according to sizing tool)												
DN 40/Sensor type 10				**1**	**C**							
DN 50/Sensor type 10				**1**	**D**							
DN 65/Sensor type 10				**1**	**E**							
DN 80/Sensor type 10				**1**	**F**							
DN 100/Sensor type 10				**1**	**G**							
DN 125/Sensor type 10				**1**	**H**							
DN 100/Sensor type 22				**2**	**G**							
DN 125/Sensor type 22				**2**	**H**							
DN 150/Sensor type 22				**2**	**J**							
DN 200/Sensor type 22				**2**	**K**							
DN 250/Sensor type 22				**2**	**L**							
DN 300/Sensor type 22				**2**	**M**							
DN 350/Sensor type 22				**2**	**N**							
DN 400/Sensor type 22				**2**	**P**							
DN 450/Sensor type 22				**2**	**Q**							
DN 500/Sensor type 22				**2**	**R**							
DN 600/Sensor type 22				**2**	**S**							
DN 700/Sensor type 22				**2**	**T**							
DN 800/Sensor type 22				**2**	**U**							
DN 900/Sensor type 22				**2**	**V**							
DN 1000/Sensor type 22				**2**	**W**							
DN 1100/Sensor type 22				**2**	**X**							
DN 1200/Sensor type 22				**2**	**Y**							
DN 300/Sensor type 32				**3**	**M**							
DN 350/Sensor type 32				**3**	**N**							
DN 400/Sensor type 32				**3**	**P**							
DN 450/Sensor type 32				**3**	**Q**							
DN 500/Sensor type 32				**3**	**R**							
DN 600/Sensor type 32				**3**	**S**							
DN 700/Sensor type 32				**3**	**T**							
DN 800/Sensor type 32				**3**	**U**							
DN 900/Sensor type 32				**3**	**V**							
DN 1000/Sensor type 32				**3**	**W**							
DN 1100/Sensor type 32				**3**	**X**							
DN 1200/Sensor type 32				**3**	**Y**							
DN 1400/Sensor type 32				**4**	**A**							
DN 1500/Sensor type 32				**4**	**B**							
DN 1600/Sensor type 32				**4**	**C**							
DN 1800/Sensor type 32				**4**	**D**							
DN 2000/Sensor type 32				**4**	**E**							
DN 500/Sensor type 50				**5**	**R**							
DN 600/Sensor type 50				**5**	**S**							
DN 700/Sensor type 50				**5**	**T**							
DN 800/Sensor type 50				**5**	**U**							
DN 900/Sensor type 50				**5**	**V**							
DN 1000/Sensor type 50				**5**	**W**							

© Siemens 2021

Selection and ordering data

	Article No.												
SITRANS FP330/FPS300 averaging pitot tube with FASTLOK	**7ME163**	■	**-**	■	■	■	■	**-**	■	■	■	■
DN 1100/Sensor type 50				**5**	**X**							
DN 1200/Sensor type 50				**5**	**Y**							
DN 1400/Sensor type 50				**6**	**A**							
DN 1500/Sensor type 50				**6**	**B**							
DN 1600/Sensor type 50				**6**	**C**							
DN 1800/Sensor type 50				**6**	**D**							
DN 2000/Sensor type 50				**6**	**E**							
Process connection/wetted parts material												
Cutting ring PN40/stainless steel 316L/1.4404						**N**						
Material of welding parts/type of end support												
Carbon steel P235GH/without end support							**0**					
Stainless steel 316L/1.4404 / without end support							**1**					
Carbon steel P235GH mounting components with closed end support							**3**					
Stainless steel 316L/1.4404 / closed end support							**4**					
Thickness of pipe insulation												
Pipe insulation: 0 ... < 50 mm								**0**				
Pipe insulation: 500 ... < 100 mm								**1**				
Pipe insulation: 1000 ... < 150 mm								**2**				
Pipe insulation: 1500 ... < 200 mm								**3**				
System design												
Compact design for dry gases and liquids without integrated temperature measurement									**0**			
Compact design for wet gases with or without integrated temperature measurement as well as for dry gases and liquids with integrated temperature measurement									**1**			
Remote design for dry gases, wet gases and liquids									**3**			
Type of protection of pressure transmitter												
No Ex/without pressure tranmitter										**A**		
Intrinsic safety										**B**		
Explosion proof										**C**		
Intrinsic safety, Explosion proof										**D**		
Dust ignition proof zone 21/22 (DIP), increased safety zone 2										**L**		
Dust ignition proof zone 20/21/22 (DIP), increased safety zone 2										**M**		
Intrinsic safety, Explosion proof, Dust ignition proof zone 21/22 (DIP), increased safety zone 2										**S**		
Intrinsic safety, Explosion proof, Dust ignition proof zone 21/22 (DIP), increased safety zone 2, class division										**T**		
Electrical connections/cable entries of pressure transmitter												
Without pressure transmitter											**A**	
2 x M20 x 1.5											**F**	
2 x 1/2-14 NPT											**M**	
Local operation/display of pressure transmitter												
Without display (closed lid)/without pressure tranmitter												**0**
With display (closed lid)												**1**
With display (lid with glass window)												**2**

© Siemens 2021

Averaging pitot tube with FASTLOK

Selection and ordering data	Order code
*Further designs**	
Please add "**-Z**" to Article No. and specify Order code(s) and plain text.	
Certificates of primary element incl. fittings	
Inspection certificate of the primary element (EN 10204-3.1) - material of pressure-containing and wetted parts	**C52**
Factory certificate of the primary element (EN 10204-2.2) - wetted parts (MR 0175-2015)	**C54**
Dimensional record of the primary element	**C55**
Dimensional drawing 1:1 DWG of the primary element	**C59**
Maximum measuring span of pressure transmitter	
20 mbar (8.037 inH_2O)	**I01**
60 mbar (24.11 inH_2O)	**I02**
250 mbar (100.5 inH_2O)	**I03**
600 mbar (241.1 inH_2O)	**I04**
1600 mbar (643 inH_2O)	**I05**
Shut-off valves	
With mounted shut-off valves DN8 made of carbon steel, up to 300 °C with tube fitting 12 mm	**T50**
With mounted shut-off valves DN8 made of stainless steel, up to 300 °C with tube fitting 12 mm	**T51**
With mounted ball valve made of stainless steel, up to 200 °C with tube fitting 12 mm	**T59**
Valve manifolds for mounting on primary element	
With mounted manifold (3-fold) made of stainless steel, PTFE sealings, cadmium-plated steel screws	**U40**
With mounted manifold (3-fold) made of stainless steel, PTFE sealings, stainless steel screws	**U41**
With mounted manifold (5-fold) made of stainless steel, PTFE sealings, cadmium-plated steel screws	**U42**
With mounted manifold (5-fold) made of stainless steel, PTFE sealings, stainless steel screws	**U43**
With mounted multi-way cock made of stainless steel, PTFE sealings, cadmium-plated steel screws	**U44**
With mounted multi-way cock made of stainless steel, PTFE sealings, stainless steel screws	**U45**
With enclosed manifold (3-fold) made of stainless steel, PTFE sealings, cadmium-plated steel screws with tube fitting 12 mm	**U50**
With enclosed manifold (3-fold) made of stainless steel, PTFE sealings, stainless steel screws with tube fitting 12 mm	**U51**
With enclosed manifold (5-fold) made of stainless steel, PTFE sealings, cadmium-plated steel screws with tube fitting 12 mm	**U52**
With enclosed manifold (5-fold) made of stainless steel, PTFE sealings, stainless steel screws with tube fitting 12 mm	**U53**
With enclosed multi-way cock made of stainless steel, PTFE sealings, cadmium-plated steel screws with tube fitting 12 mm	**U54**
With enclosed multi-way cock made of stainless steel, PTFE sealings, stainless steel screws with tube fitting 12 mm	**U55**
Application data	
ID number of the primary element according to sizing tool	**Y40**

* For further options, please refer to SITRANS P320.

Scope of delivery

- Averaging pitot tube with removal mechanism, packing gland, differential pressure connection
- Mounting part threaded welding socket with isolation ball valve
- If necessary: closed counter support
- Shut-off valves for remote design (options T5x selected in PIA)
- Manifold for compact/remote design (options U4x, U5x selected in PIA)